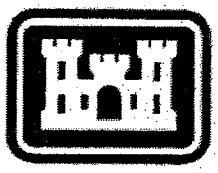

US Army Corps
Of Engineers
St. Paul District

UPPER MISSISSIPPI RIVER SYSTEM

ENVIRONMENTAL MANAGEMENT PROGRAM

OPERATION AND MAINTENANCE MANUAL

LONG LAKE HABITAT REHABILITATION AND ENHANCEMENT PROJECT

Pool 7
Upper Mississippi River
Trempealeau and La Crosse Counties, Wisconsin

June 2008

PREFACE

The Long Lake Habitat Rehabilitation and Enhancement Project, constructed by the Corps of Engineers, was completed in June 2000. The project was severely damaged by the spring flood of 2001, and was subsequently restored in 2003. In accordance with Section 906(e) of the Water Resources Development Act of 1986, and policies set forth in the Fourth and Fifth Annual Addenda, the U.S. Fish and Wildlife Service has responsibility for the operation and maintenance of project features located on the Upper Mississippi River National Wildlife and Fish Refuge. The Corps of Engineers has prepared this manual to assist the U.S. Fish and Wildlife Service in fulfilling this responsibility.

The manual and appendices contain the latest information pertinent to operation and maintenance of this project. The project as designed and constructed will improve the quality of habitat for a variety of fish species in Long Lake. The planning, design, and construction of the project were the result of a cooperative effort on the part of the involved Federal and State agencies and the public. The continuation of this cooperation and coordination as part of the operation and maintenance of the project will be important to the success of the project and is strongly recommended.

DEPARTMENT OF THE ARMY
St. Paul District, Corps of Engineers
190 Fifth Street East
St. Paul, Minnesota 55101-1638

UPPER MISSISSIPPI RIVER SYSTEM
ENVIRONMENTAL MANAGEMENT PROGRAM

LONG LAKE, POOL 7, UPPER MISSISSIPPI RIVER
TREMPEALEAU AND LA CROSSE COUNTIES, WISCONSIN

OPERATION AND MAINTENANCE MANUAL

TABLE OF CONTENTS

ITEM	PAGE
PREFACE	
INTRODUCTION	1
PART I - PROJECT FEATURES AND CONSTRUCTION HISTORY	1
AUTHORIZATION AND LOCATION	1
DESCRIPTION OF PROJECT	1
General/Background	1
Design Considerations	2
CONSTRUCTION HISTORY	3
PART II - OPERATION AND MAINTENANCE	4
GENERAL RESPONSIBILITIES AND PROCEDURES	4
Approved Responsibilities	4
District Manager	4
Inspections	4
Annual Report	5

ITEM CONT'D	PAGE
OPERATION	6
MAINTENANCE	6
INSPECTIONS, TESTS, AND OPERATIONS FOLLOWING MAJOR STORMS OR FLOODS	6
PROJECT MONITORING AND EVALUATION	7

APPENDICES

A PROJECT DRAWINGS
B MEMORANDUM OF AGREEMENT
C REPLACEMENT SPECIFICATIONS

INTRODUCTION

This manual has been prepared to serve as a guide for the operation and maintenance of the Long Lake Habitat Rehabilitation and Enhancement Project in Trempealeau and La Crosse Counties, Wisconsin. This manual has been written for project and management personnel familiar with the project. It does not contain detailed information which is common knowledge to personnel or which is presented in other existing manuals or regulations.

For ease in use, this manual is divided into two sections.

Part I. This section describes the project features and provides historical information on the project.

Part II. This section gives details on the operation and maintenance of the project.

PART I - PROJECT FEATURES AND CONSTRUCTION HISTORY

AUTHORIZATION AND LOCATION

The Long Lake project was authorized under the provisions of the 1985 Supplemental Appropriations Act (Public Law 99-88) and Section 1103 of the Water Resources Development Act of 1986 (Public Law 99- 662). The project is located in the upper portion pool 7 about 1.5 miles below Trempealeau, Wisconsin. The project lies within the Upper Mississippi River National Wildlife Refuge (Refuge). Project drawings (appendix A) show the location of the project.

The Long Lake project is located on Federal lands managed as a National Wildlife Refuge. As such, operation and maintenance of those features are to be carried out in compliance with Section 906(e) of the 1986 Water Resources Development Act and policies set forth in the Fourth and Fifth Annual Addenda.

DESCRIPTION OF THE PROJECT

General/Background

The Long Lake project is designed to alleviate winter dissolved oxygen depletion problems in this 15-acre backwater lake. It is expected that some adjacent backwater areas such as Webb Slough may also benefit. The Long Lake project consists of a 760-foot long channel designed to provide the capability to introduce Mississippi River channel flows into Long Lake as necessary to alleviate winter dissolved oxygen depletion in the lake. The channel could also serve to introduce water into the lake during the open water season if water quality conditions or other habitat concerns show such a need. A control structure was constructed within the channel to allow the control and regulation of flows into Long Lake.

The Definite Project Report/Environmental Assessment (SP-13), Long Lake Habitat Rehabilitation and Enhancement Project, July 1991, provides additional details on the original planning and design of the project.

Construction of the original Long Lake project was completed in May 2000. During the spring of 2001, the project was severely damaged by floodwaters during a flood of near record proportions. The channel banks were eroded, resulting in substantial debris and sediment deposits within portions of the channel, while other reaches of the channel were extensively scoured. The embankment containing the control structure was washed away and the control structure dislocated. There were also significant sediment deposits within Long Lake. The damage was so substantial that the entire project required reconstruction to become functional again.

The Letter Report/Environmental Assessment, Long Lake Habitat Rehabilitation and Enhancement Flood Damage Repair, dated April 2002, provides additional details on the planning and design for project reconstruction.

Design Considerations

Channel Size – The design criteria for the project was to provide a flow of 10 cubic feet per second to Long Lake during the winter. Because of relatively low head differentials between the Mississippi River main channel and Long Lake, a channel with a relatively large cross-section area had to be provided. The channel was designed with a 10-foot bottom width and 1V:2.5H side slopes. The invert of the channel is 634.0, 5 feet below the project pool elevation of 639.0. (It should be noted that in the upper portions of pool 7, water surface elevations would rarely fall below 639.2 because of the slope on the pool.)

Control Structure – The control structure had to be large enough to pass the design flow under the lowest potential head conditions. This required a 48-inch diameter pipe. The original project completed in 2000 contained a slide gate for water control. The reconstructed structure employs stop logs for water control. The change was made to simplify operation because only annual adjustments in flow regulation are expected to be required

Rock Jetties – Rock jetties were constructed at the entrance to the channel on the river end for the purpose of reducing the potential for sediment accumulation in the channel and associated channel maintenance requirements. The jetties were angled in a downstream direction to minimize bed sediment migration into the channel.

Maintenance Road – A maintenance road was constructed along the channel to allow the U.S. Fish and Wildlife Service access for equipment if maintenance of the channel in the form of dredging or snag removal is required. The road was located to minimize tree removal during construction. The road was designed for minimal maintenance because it is expected that future use would be very infrequent.

Access Road – The access road was located to comply with the real estate agreements

obtained from private landowners by the U.S. Fish and Wildlife Service, allowing access to the site for operation and maintenance. Use of this access **must** be coordinated with the U.S. Fish and Wildlife Service and private landowners.

CONSTRUCTION HISTORY

The original contract for the Long Lake project was awarded in May 1999 to Phenco Inc., 1977 American Drive, Neenah, Wisconsin 54956. Construction began in September 1999 and was essentially completed in May 2000. The construction cost of the project was $355,000.

Reconstruction of the project was accomplished by Frontier Construction Co., Inc., 48243 Frontier Lane, Deer River, Minnesota 56636. Construction began in November 2002 and was completed in July 2003. The construction cost for project reconstruction was $422,000.

PART II - OPERATION AND MAINTENANCE

GENERAL RESPONSIBILITIES AND PROCEDURES

Approved Responsibilities

Operation and maintenance responsibilities for the Long Lake project were originally outlined in the Definite Project Report for the project. The acceptance of these responsibilities was formally recognized by an agreement signed by the U.S. Fish and Wildlife Service (USFWS) and the St. Paul District, Corps of Engineers. This agreement, dated September 17, 1992, is contained in appendix B. The capability of the USFWS to carry out the responsibilities described below will be contingent upon the passage of sufficient appropriations by Congress.

As part of the agreement made to reconstruct the project, it was agreed between the USFWS, the St. Paul District, and the Wisconsin Department of Natural Resources that if sedimentation in the channel and subsequent maintenance of the channel become excessive, the USFWS would not be required to maintain the project in operational status. The decision to abandon the project due to excessive maintenance requirements would be made by the USFWS following coordination with the St. Paul District and the Wisconsin Department of Natural Resources.

District Manager

Typically, the USFWS operation and maintenance responsibility for habitat projects located within the Refuge is given to the District Manager in charge of the Refuge District where the project is located. For the Long Lake project, the current address for the District Manager is 555 Lester Avenue, Onalaska, Wisconsin 54650. Hereinafter, for the purposes of this manual, when describing responsibilities, etc., the term "District Manager" will be used.

Inspections

The District Engineer or his representative will be kept informed of operation and maintenance activities for the Long Lake project through periodic inspection of the project by the Corps and through review of an annual report submitted by the USFWS. A representative of the Corps will coordinate the periodic inspection in advance with the USFWS. The first inspection will occur within 3 years after project completion. Subsequent inspections will occur at 3-year intervals. After the first 10 years of project operation, the Corps and the USFWS will jointly review the inspection plans and make any appropriate revisions.

The findings of the periodic inspections will be transmitted to the USFWS and could include recommendations for any remedial work considered necessary to maintain the habitat project in a satisfactory condition. Any agreed upon remedial work should be completed as soon as possible by the USFWS as provided in the Memorandum of Agreement between the USFWS and the Corps.

The District Manager or a designated representative should make an inspection of the project once a year as a minimum. The frequency of inspection will be subject to review by the USFWS and Corps and could change upon mutual agreement of both parties. The timing of the inspection can be made at the discretion of the District Manager. Inspections should also be made after any high water event where Mississippi River flows exceed 200,000 cubic feet per second at Lock and Dam 6. The Corps should participate in the inspections following major flow events.

Annual Report

An annual report covering inspection of the habitat project shall be submitted to the St. Paul District, Attn: Project Management Branch, at the end of the calendar year. The report should briefly summarize the condition of the project and any maintenance or repairs required within the reporting period.

OPERATION

The U.S. Fish and Wildlife Service will operate the project for the habitat purposes for which it was designed; alleviation of dissolved oxygen depletion problems in Long Lake. It is recognized that the amount of flow introduced to Long Lake will vary with season and river discharge conditions, and that flexibility in operation will be the norm rather than the exception. The general pattern of operation will be to set the stop logs for winter operation prior to winter freeze-up.

MAINTENANCE

The U.S. Fish and Wildlife Service will maintain the project as necessary for the project to function properly and provide the benefits for which it was designed. Pertinent sections of the construction specification are contained in appendix C to be used as applicable in procuring replacement rock or other materials.

The following recommendations are provided for the benefit of personnel operating and maintaining the project:

a. Large snags or other debris deposits should be removed from the channel as soon as practical. Allowing this material to remain in the channel for extended periods of time will only accelerate the deposition of additional debris and sediment or cause erosion of the channel.

b. Repair of displaced or lost rock protection and/or chinking stone should occur as soon as possible to prevent larger erosion problems from occurring.

INSPECTIONS, TESTS, AND OPERATIONS FOLLOWING MAJOR STORMS OR FLOODS

As stated in the Memorandum of Agreement between the USFWS and the Corps, the Corps will be responsible for any mutually agreed upon repair and rehabilitation of the Long Lake project that may be needed as a result of a specific storm or flood.

Should inspection of the project area following a major flood or natural disaster disclose substantial damage to the project, the Corps and USFWS will meet and discuss the appropriate course of action in light of original project design. The options of rehabilitation or abandonment of the project may be considered at this time. Any decision would be carried forth only upon written mutual agreement of the USFWS and the Corps. Included within such agreement would be a description of the agreed upon course of action and funding responsibilities, if any.

PROJECT MONITORING AND EVALUATION

The Corps of Engineers will conduct performance monitoring of the Long Lake project. Monitoring of dissolved oxygen, water temperature, and current velocity is part of the scheduled performance monitoring for the project. This information will be used to help determine the amount of flow to introduce to Long Lake during various seasons, and to determine the extent to which the design meets the habitat improvement objectives. Information from this monitoring will also be used, if required, when ascertaining whether rehabilitation or abandonment of portions of this project would be the wisest choice.

APPENDIX A

PROJECT DRAWINGS

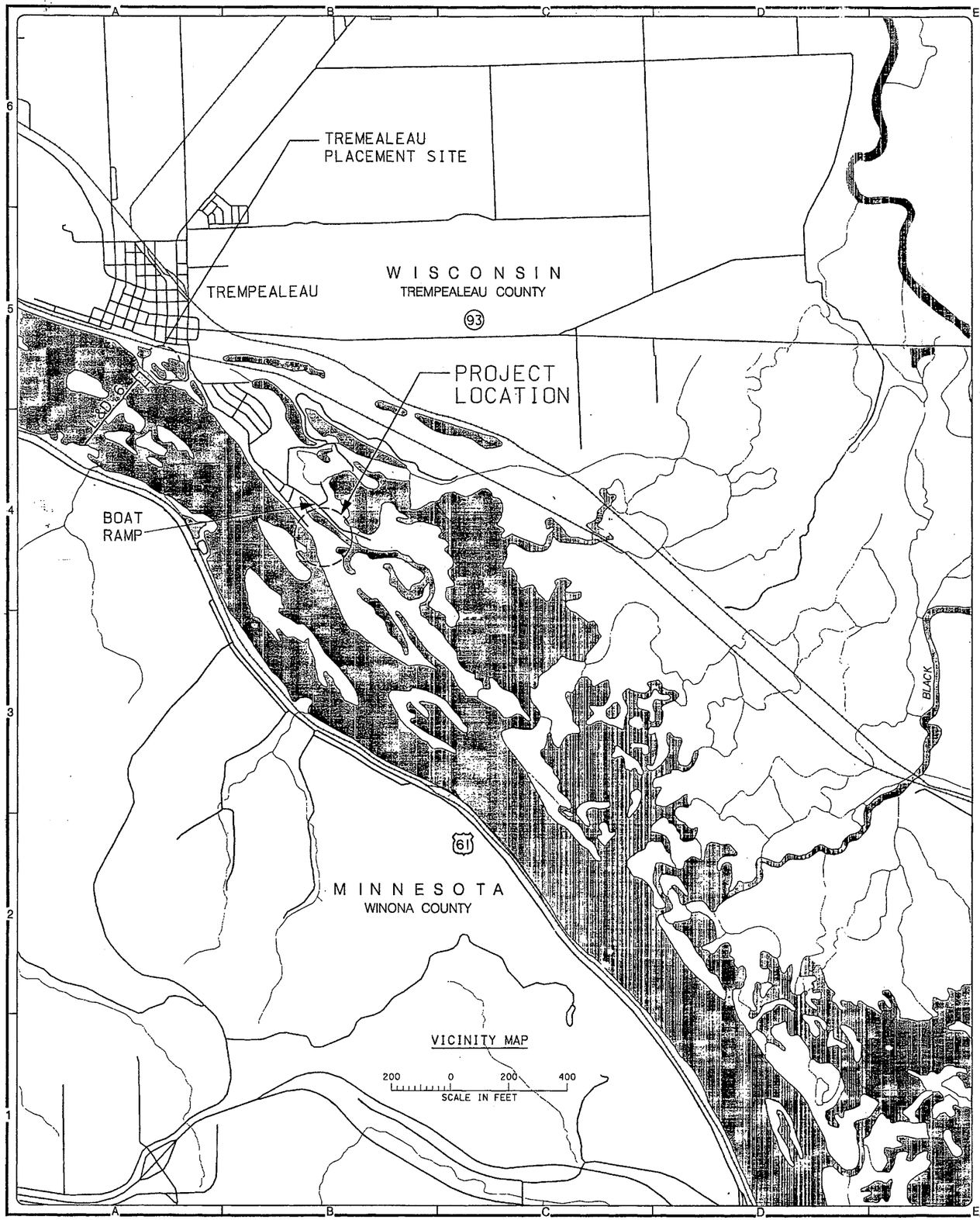

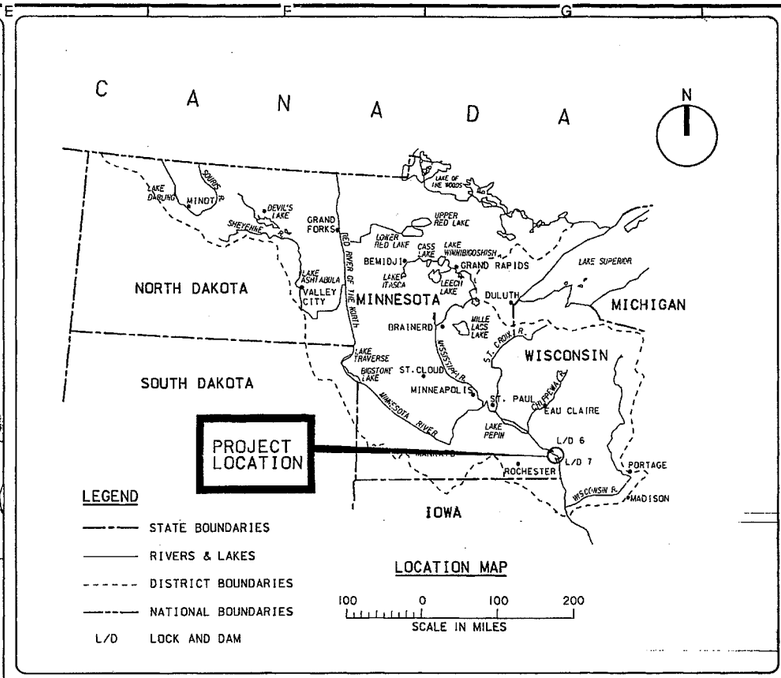

CONSTRUCTION DRAWINGS
ENVIRONMENTAL MGMT. PROG.
MISSISSIPPI RIVER
LONG LAKE
POOL 7, WISCONSIN

MISSISSIPPI RIVER - POOL 7
LONG LAKE REHABILITATION

ENVIRONMENTAL

LOCATION AND
VICINITY MAPS

DRAWING NUMBER:
M-P7-
00/005

SHT 1 OF 10.

THIS PROJECT WAS DESIGNED BY THE ST. PAUL DISTRICT, CORPS OF ENGINEERS. INITIALS OR SIGNATURES AND REGISTRATION DESIGNATIONS OF INDIVIDUALS APPEAR ON THESE PROJECT DOCUMENTS WITHIN THE SCOPE OF THEIR EMPLOYMENT AS REQUIRED BY ER 1110-1-8152. SIGNATURES INDICATE OFFICIAL RECOMMENDATION OF ALL DRAWINGS IN THIS SET.

APPROVED BY:
DISTRICT COMMANDER

APPROVAL RECOMMENDED BY:
CHIEF
CHIEF

PROJECT MANAGER
CHIEF COST ENGRG & SPECS SECTION
CHIEF GENERAL ENGINEERING SECTION
CHIEF STRU/MECH/ELEC/ARCH SECTION
ENGINEERING DIVISION

CHIEF GEOTECHNICAL & GEOLOGY SECT.
CHIEF HYDRAULICS & HYDROLOGY SECT.

DEPARTMENT OF THE ARMY
ST. PAUL, MINNESOTA
CORPS OF ENGINEERS
ST. PAUL DISTRICT

DESIGNED: LKT/JLW
DRAWN: LKT
CHECKED: TAG
DESIGNED: JSH
CHECKED:
SCALE: AS SHOWN
DATE: APR 2002
CADD FILE NAME: MTAG40005.DGN
SOL. NO: DACW37-02-R-0002
AE APPROVING OFFICIAL:

Symbol	Description	Date	Appr.
	AS-BUILT AS OF JULY 2003		

US Army Corps of Engineers
St. Paul District

AS-BUILT

CONSTRUCTION DRAWING INDEX

DRAWING NO.	SHT	DESCRIPTION	CAD FILE
GENERAL DRAWINGS			
M-P7-00/005	1	LOCATION & VICINITY MAPS	M7AG40005
M-P7-00/006	2	DRAWING INDEX & LEGEND	M7AG40006
CIVIL/SITE DRAWINGS			
M-P7-04/002	3	PLAN - MAINTENANCE ROAD, ACCESS ROAD AND CHANNEL	M7AG10402
M-P7-04/003	4	PLAN - SANDBAR DREDGING	M7AG10403
M-P7-04/004	5	PROFILES - CHANNEL, MAINTENANCE ROAD AND ACCESS ROAD.	M7AG20404
M-P7-04/005	6	SECTIONS - CHANNEL, RIPRAP AND ROADS	M7AG30405
M-P7-04/006	7	SECTIONS AND DETAIL - CHANNEL, RIPRAP, ROADS AND SANDBAR	M7AG30406
M-P7-04/007	8	PLAN, SECTIONS AND DETAIL - INLET AND RCP BEDDING	M7AG30407
STRUCTURE DRAWINGS			
M-P7-64/018	9	CONTROL STRUCTURE - PLAN, SECTION AND DETAILS	M7AS164018
M-P7-64/019	10	CONTROL STRUCTURE - SECTION AND DETAILS	M7AS564019

REFERENCE DRAWING INDEX

DRAWING NO.	DESCRIPTION	CAD FILE
M-P7-64/5	GATEWELL - PLAN AND SECTIONS	LONG1A
M-P7-64/6	GATEWELL CONCRETE REINFORCING - PLAN, SECTIONS AND DETAILS	LONG3A
M-P7-64/7	MISCELLANEOUS METALS - ELEVATIONS, SECTIONS AND DETAILS	LONG2A
M-P7-64/8	TRASH GUARD AND FENCE - VIEWS, PLAN, ELEVATIONS, SECTION AND DETAIL	LONG4A
Z2-22	BEST MANAGEMENT PRACTICES FOR EROSION AND SEDIMENT CONTROL	
M-L6-14/081	HYDROGRAPHIC DATA - ELEVATION DURATION CURVES (TAILWATER), JAN-JUN 1972-2001	MI14Y081
M-L6-14/082	HYDROGRAPHIC DATA - ELEVATION DURATION CURVES (TAILWATER), JUL-DEC 1972-2001	MI14Y082
M-L6-14/083	HYDROGRAPHIC DATA - HYDROGRAPHS (TAILWATER) 1992-1996	MI14Y083
M-L6-14/084	HYDROGRAPHIC DATA - HYDROGRAPHS (TAILWATER) 1997-2001	MI14Y084
M-P7-14/036	HYDROGRAPHIC DATA - ELEVATION DURATION CURVES (POOL), JAN-JUN 1972-2001	MJ14Y036
M-P7-14/037	HYDROGRAPHIC DATA - ELEVATION DURATION CURVES (POOL), JUL-DEC 1972-2001	MJ14Y037
M-P7-14/038	HYDROGRAPHIC DATA - HYDROGRAPHS (POOL) 1992-1996	MJ14Y038
M-P7-14/039	HYDROGRAPHIC DATA - HYDROGRAPHS (POOL) 1997-2001	MJ14Y039
PLATE 2	ROCK CLOSURE & TEMPORARY STRUCTURE STABILITY BERM	M7RC40402

GENERAL CROSS-REFERENCING SYMBOLS

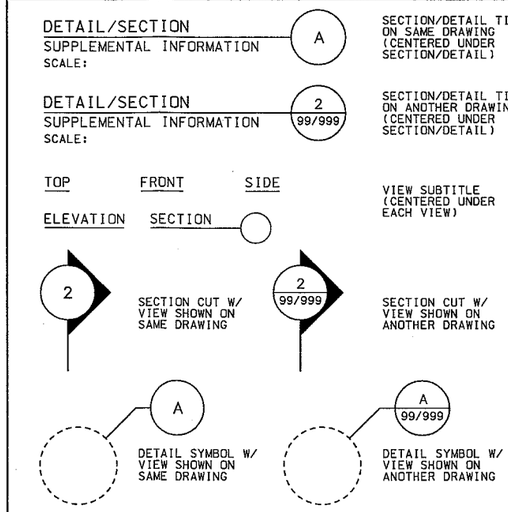

ABBREVIATIONS

ALT. W/	ALTERNATE WITH	GALV.	GALVANIZED
ALUM.	ALUMINUM	I.F.	INSIDE FACE
BOT.	BOTTOM	LG.	LONG
CL.	CLEAR COVER	MAX.	MAXIMUM
C.J.	CONSTRUCTION JOINT	MIN.	MINIMUM
CONC.	CONCRETE	N.F.	NEAR FACE
CONT. JT.	CONTRACTION JOINT	O.F.	OUTSIDE FACE
DIA.	DIAMETER	O.C.	ON CENTER
E.F.	EACH FACE	S.S.	STAINLESS STEEL
E.J.	EXPANSION JOINT	T & B	TOP AND BOTTOM
EL.	ELEVATION	TYP.	TYPICAL
E.W.	EACH WAY	U.N.O.	UNLESS NOTED OTHERWISE
F.F.	FAR FACE		

GENERAL LEGEND

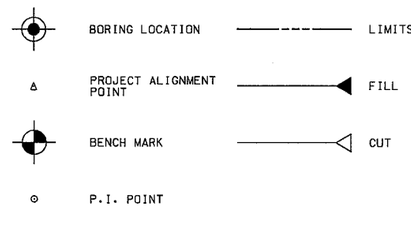

US Army Corps of Engineers
St. Paul District

Symbol	Description	Date	Appr.
	AS-BUILT AS OF JULY 2003		

DESIGNED: TLW
DRAWN: TLW
CHECKED: TWC
DESIGNED: JSH
CHECKED: .
SCALE: AS SHOWN
DATE: FEB 2002
CADD FILE NAME: M7AG40006.DGN
SOL. NO: DACW37-02-R-0002
AE APPROVING OFFICIAL:

DEPARTMENT OF THE ARMY
ST. PAUL, MINNESOTA
CORPS OF ENGINEERS
ST. PAUL DISTRICT

MISSISSIPPI RIVER - POOL 7
LONG LAKE HREP REHABILITATION

ENVIRONMENTAL
DRAWING INDEX & LEGEND

DRAWING NUMBER:
M-P7-
00/006

SHT 2 OF 10

AS-BUILT

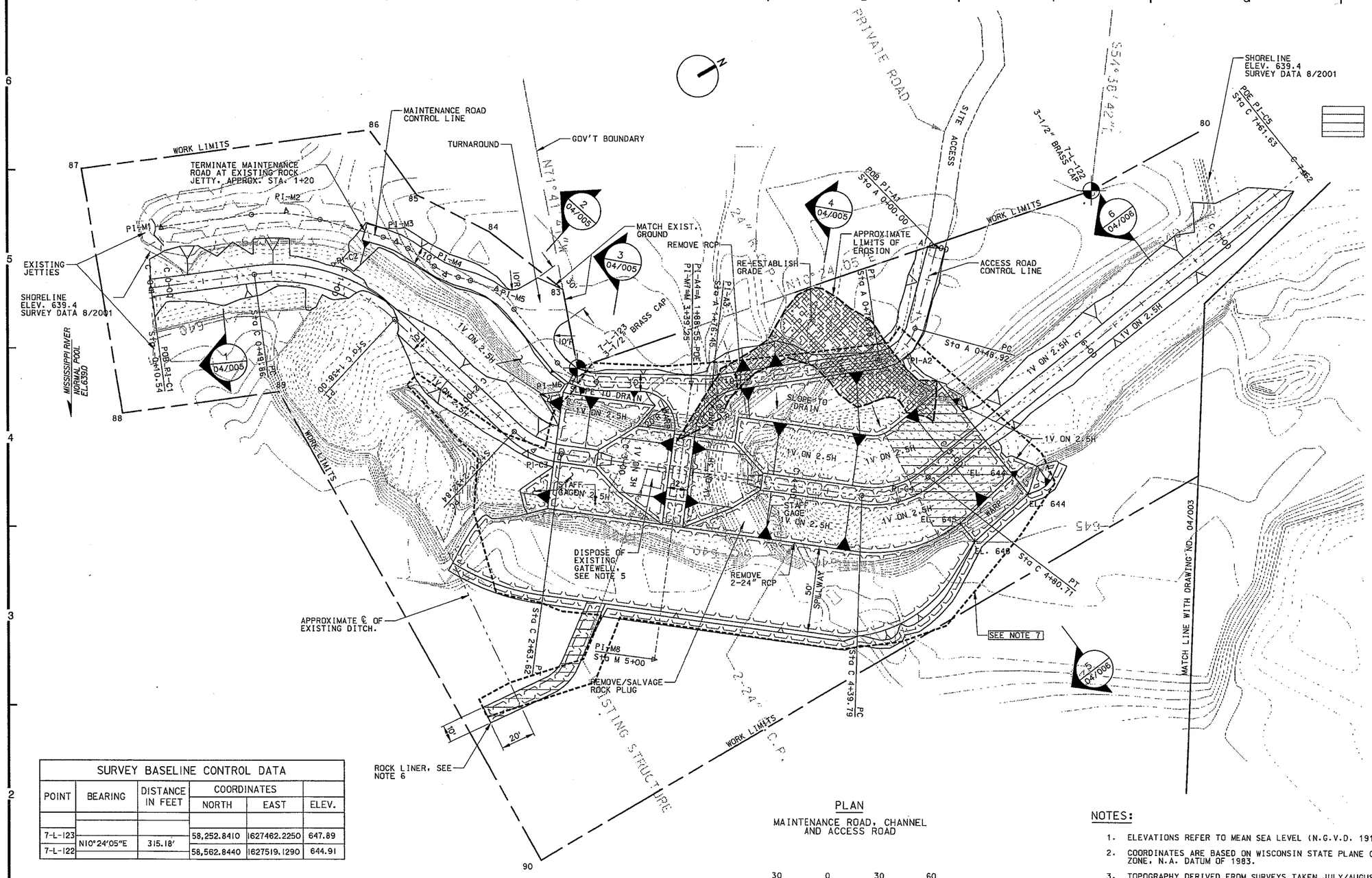

PLAN

MAINTENANCE ROAD, CHANNEL AND ACCESS ROAD

30 0 30 60

SCALE IN FEET

SURVEY BASELINE CONTROL DATA					
POINT	BEARING	DISTANCE IN FEET	COORDINATES NORTH	COORDINATES EAST	ELEV.
7-L-123	N10°24'05"E	315.18'	58,252.8410	1627462.2250	647.89
7-L-122			58,562.8440	1627519.1290	644.91

CHANNEL CONTROL LINE "C" DATA										
POINT	BEARING	DISTANCE IN FEET	COORDINATES NORTH	COORDINATES EAST	STATIONING PC	STATIONING PT	CURVE DATA Δ	R	L	T
PI-C1			58,060.369	1,627,300.024	N/A	N/A	N/A	N/A	N/A	N/A
	N22°03'38"E	107.56								
PI-C2			58,160.058	1,627,340.423	C 0+49.86	C 1+38.00	50°29'43"	100.00	88.13'	47.16'
	N72°33'21"E	157.90'								
PI-C3			58,207.391	1,627,491.057	C 2+32.84	C 2+63.62	35°16'09"	50.00'	30.78'	15.89'
	N37°17'12"E	213.76'								
PI-C4			58,377.458	1,627,620.551	C 4+39.79	C 4+80.71	46°53'37"	50.00'	40.92'	21.69'
	N9°36'25"W	302.60'								
PI-C5			58,675.812	1,627,570.051	N/A	N/A	N/A	N/A	N/A	N/A

NOTES:

1. ELEVATIONS REFER TO MEAN SEA LEVEL (N.G.V.D. 1912 ADJ.).
2. COORDINATES ARE BASED ON WISCONSIN STATE PLANE GRID SYSTEM, CENTRAL ZONE, N.A. DATUM OF 1983.
3. TOPOGRAPHY DERIVED FROM SURVEYS TAKEN JULY/AUGUST 2001. EXISTING CONDITIONS DIFFER FROM TOPOGRAPHY SHOWN DUE TO HIGH WATER IN SPRING 2002.
4. THE GRADE CONTROL STRUCTURE LOCATION SHOWN IS APPROXIMATE. IRON RODS WILL BE PLACED BY THE GOVERNMENT TO DENOTE THE ALIGNMENT LIMITS. THE ALIGNMENT SHALL BE STAKED BY THE CONTRACTOR AND APPROVED BY THE CONTRACTING OFFICER PRIOR TO CONSTRUCTION.
5. THE EXISTING GATEWELL AND 48" RCP SHOWN WAS MOVED FROM ITS CONSTRUCTED POSITION DURING THE HIGH WATER OF SPRING 2001. THE EXISTING STRUCTURE SHALL BE DISPOSED OF AND A NEW GATEWELL CONSTRUCTED. AT THE CONTRACTOR'S OPTION, THE 48" RCP MAY BE SALVAGED AND PLACED IN THE LOCATION SHOWN OR DISPOSED OF AND NEW RCP PLACED.
6. THE LOCATION SHOWN FOR THE ROCK LINER IS APPROXIMATE. THE ACTUAL LOCATION SHALL BE FIELD LOCATED AS DIRECTED BY THE CONTRACTING OFFICER.
7. AREA OF ERODED EXISTING GROUND. PLAN WAS SITE ADJUSTED BASED ON THIS DESIGN. FOR FINISHED AREA CONTOURS SEE PARAGON & ASSOCIALS DRAWING SHT 1 OF 4 CADD NO. LONGLAKE AS-BUILT TOPO 2002-2.DWG.

US Army Corps of Engineers
St. Paul District

Symbol	Description	Date	Appr.
	AS-BUILT AS OF JULY 2003		

DESIGNED: JSH
DRAWN: TMG/TLW
CHECKED: TLW
SCALE: AS SHOWN
CADD FILE NAME: M7AC10402.DGN
DATE: FEB 2002
SOL. NO: DACW37-02-R-0002
AE APPROVING OFFICIAL:

DEPARTMENT OF THE ARMY
ST. PAUL, MINNESOTA
CORPS OF ENGINEERS
ST. PAUL DISTRICT

MISSISSIPPI RIVER - POOL 7
LONG LAKE HREP REHABILITATION
ENVIRONMENTAL
PLAN - MAINTENANCE ROAD, ACCESS ROAD AND CHANNEL

DRAWING NUMBER:
M-P7-04/002
SHT 3 OF 10

AS-BUILT

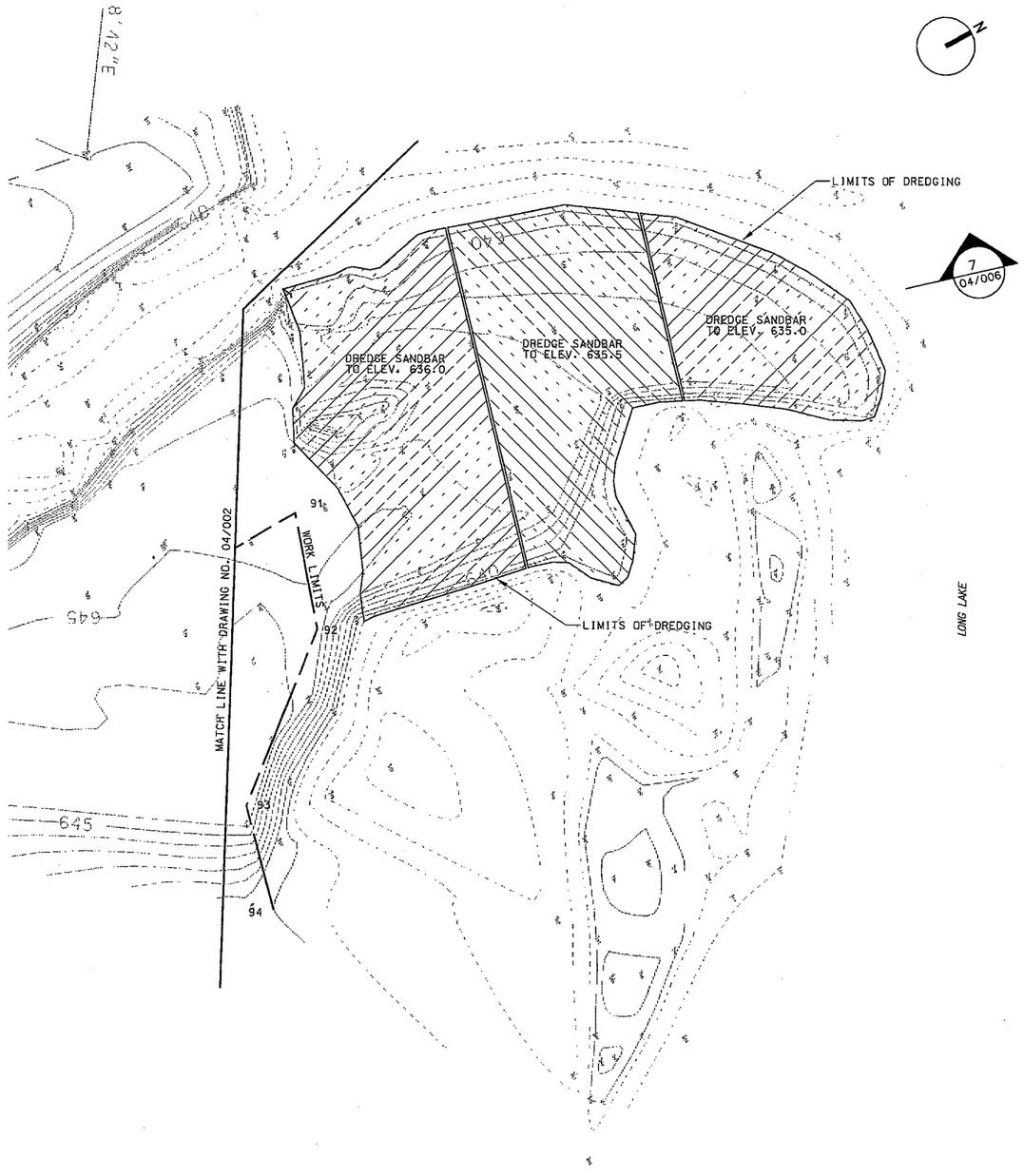

PLAN

SANDBAR DREDGING

30 0 30 60

SCALE IN FEET

NOTES:

1. ELEVATIONS REFER TO MEAN SEA LEVEL (N.G.V.D. 1912 ADJ.).
2. COORDINATES ARE BASED ON WISCONSIN STATE PLANE GRID SYSTEM, CENTRAL ZONE, N.A. DATUM OF 1983.
3. TOPOGRAPHY DERIVED FROM SURVEYS TAKEN JULY/AUGUST 2001. EXISTING CONDITIONS MAY DIFFER FROM TOPOGRAPHY SHOWN.

LIMITS OF WORK

POINT	COORDINATES NORTH	COORDINATES EAST	DISTANCE IN FEET	BEARING
80	58626.516	1627539.394		
			70.56	S0°30'02"W
7-L-122	58562.844	1627519.129		
			315.18	S10°24'05"E
7-L-123	58252.841	1627462.225		
			46.06	N71°00'00"W
83	58267.835	1627418.679		
			53.92	S67°48'03"W
84	58247.461	1627368.752		
			47.39	S56°34'13"W
85	58221.353	1627329.201		
			46.48	S83°29'56"W
86	58216.090	1627283.018		
			168.52	S21°56'59"W
87	58059.789	1627220.028		
			143.43	S69°46'10"E
88	58010.190	1627354.613		
			91.56	N21°47'42"E
89	58095.203	1627388.607		
			310.12	S89°41'18"E
90	58093.516	1627698.725		
			471.12	N00°44'18"E
91	58564.600	1627692.655		
			49.21	S71°17'34"E
92	58548.817	1627739.265		
			79.52	S38°33'37"E
93	58486.635	1627788.833		
			44.80	S75°02'31W
94	58475.072	1627832.112		

ACCESS ROAD CONTROL LINE "A" DATA

POINT	BEARING	DISTANCE IN FEET	COORDINATES NORTH	COORDINATES EAST	STATIONING PC	STATIONING PT	CURVE DATA Δ	R	L	T
PI-A1			58,468.781	1,627,503.599	N/A	N/A	N/A	N/A	N/A	N/A
	S45°34'49"E	65.42'								
PI-A2			58,422.996	1,627,550.321	A 0+48.92	A 0+78.08	66°49'39"	25.00	29.16'	16.49'
	S21°14'51"W	114.86'								
PI-A3			58,315.938	1,627,508.694	N/A	N/A	N/A	N/A	N/A	N/A
	S30°35'53"W	12.09'								
PI-A4			58,305.528	1,627,502.538	N/A	N/A	N/A	N/A	N/A	N/A

MAINTENANCE PATH CONTROL LINE "M" DATA

POINT	BEARING	DISTANCE IN FEET	COORDINATES NORTH	COORDINATES EAST	STATIONING PC	STATIONING PT	CURVE DATA Δ	R	L	T
PI-M1			58,083.097	1,627,272.009	N/A	N/A	N/A	N/A	N/A	N/A
	N22°03'36"E	73.39'								
PI-M2			58,151.113	1,627,299.572	M 0+52.92	M 0+93.30	23°08'04"	100.00	40.38'	20.47'
	N45°12'00"E	66.24'								
PI-M3			58,197.785	1,627,346.571	M 1+31.13	M 1+46.88	18°02'58"	50.00'	15.75'	7.94'
	N63°15'04"E	34.14'								
PI-M4			58,213.153	1,627,377.062	M 1+65.25	M 1+80.78	17°47'23"	50.00'	15.52'	7.83'
	N45°27'37"E	30.90'								
PI-M5			58,234.827	1,627,399.087	M 1+88.11	M 2+18.62	34°57'19"	50.00'	30.50'	15.74'
	N80°24'40"E	69.45'								
PI-M6			58,246.396	1,627,467.567	M 2+58.40	M 2+84.47	49°48'05"	30.00'	26.08'	13.93'
	N30°36'01"E	68.70'								
PI-M7			58,305.528	1,627,502.538	N/A	N/A	N/A	N/A	N/A	N/A
	S52°43'24"E	117.87'								
PI-M8			58,252.529	1,627,572.168	N/A	N/A	N/A	N/A	N/A	N/A
	S52°42'46"E	61.20'								
PI-M9			58,231.943	1,627,599.204	M 4+38.06	M 4+71.98	97°10'09"	20.00'	33.92'	22.67'
	N30°07'04"E	87.07'								
PI-M10			58,319.479	1,627,649.983	M 5+48.73	M 5+52.26	10°07'02"	20.00'	3.53'	1.77'
	N40°14'09"E	81.68'								
PI-M11			58,352.528	1,627,677.947	M 5+65.34	M 6+18.46	50°43'26"	60.00'	53.12'	28.44'
	N10°29'22"W	68.32'								
PI-M12			58,401.603	1,627,668.861	M 6+38.89	M 6+40.97	5°56'33"	20.00'	2.07'	1.04'
	N4°32'47"W	70.56'								
PI-M13			58,476.190	1,627,662.930	M 7+09.11	M 7+20.35M	12°53'01"	50.00'	11.24'	5.65'
	N17°25'48"W	86.77'								
PI-M14			58,514.845	1,627,650.794	N/A	N/A	N/A	N/A	N/A	N/A
	N10°18'32"W	86.77'								
PI-M15			58,579.923	1,627,638.957	N/A	N/A	N/A	N/A	N/A	N/A

US Army Corps of Engineers
St. Paul District

Symbol	Description	Date	Appr.
	AS-BUILT AS OF JULY 2003		

DESIGNED: TMG/AJF
DRAWN: TMG/TLW
CHECKED:
DESIGNED: JSH
CHECKED:
SCALE: AS SHOWN
DATE: FEB 2002
CADD FILE NAME: M7AG10403.DGN
SOL. NO: DACW37-02-R-0002
AE APPROVING OFFICIAL:

DEPARTMENT OF THE ARMY
ST. PAUL, MINNESOTA
CORPS OF ENGINEERS
ST. PAUL DISTRICT

MISSISSIPPI RIVER - POOL 7
LONG LAKE HREP REHABILITATION
ENVIRONMENTAL
PLAN - SANDBAR DREDGING

DRAWING NUMBER:
M-P7-
04/003

SHT 4 OF 10

AS-BUILT

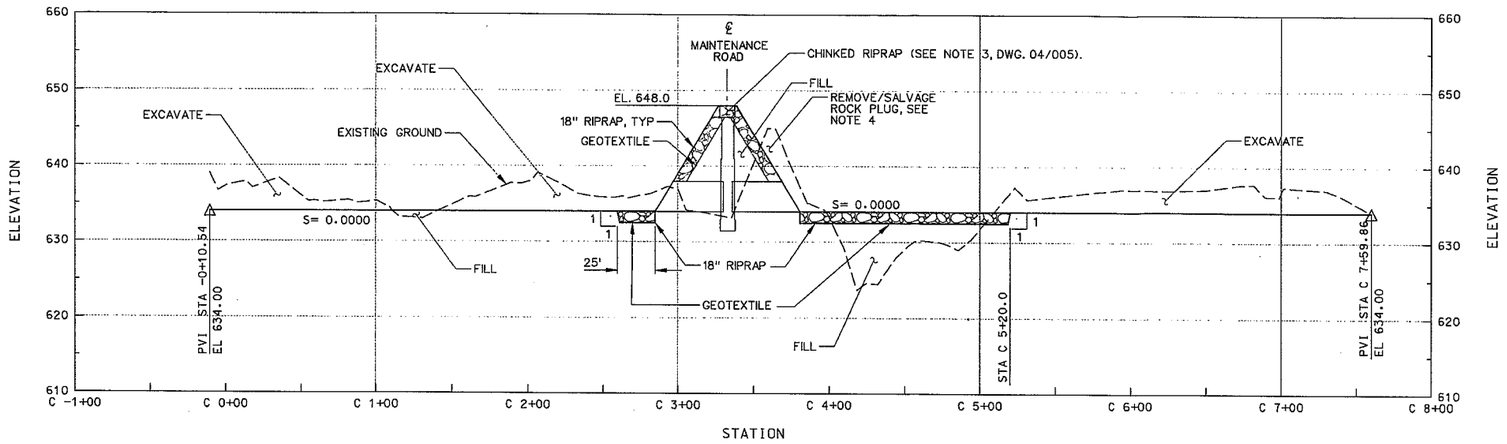

PROFILE
CHANNEL

PROFILE
MAINTENANCE ROAD

NOTES:

1. ALL ELEVATIONS 1912 ADJUSTED N.G.V.D.
2. SITE IS HIGHLY ERODED. STRIPPING (DEPTH APPROXIMATELY 6") WILL BE DETERMINED IN THE FIELD BY GOVERNMENT PERSONNEL. NO STRIPPING BELOW WATERLINE REQUIRED.
3. MAXIMUM ROAD SLOPES = 5%.
4. SALVAGED ROCK FROM ROCK PLUG SHALL BE USED AS ROCK FILL.

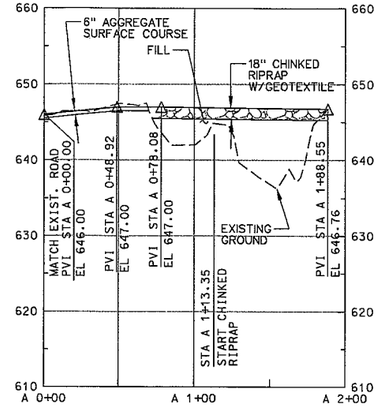

PROFILE
ACCESS ROAD

US Army Corps of Engineers
St. Paul District

Symbol	Description	Date	Appr.
	AS-BUILT AS OF JULY 2003		

DESIGNED: TMG/JJF
DRAWN: TMG/TLW
CHECKED: TLW
QUANTITIES CHECKED:
SCALE: AS SHOWN
CADD FILE NAME: M7AG20404.DGN
SOL. NO: DACW37-02-R-0002
DESIGNED: JSH
CHECKED:
DATE: FEB 2002
AE APPROVING OFFICIAL:

DEPARTMENT OF THE ARMY
ST. PAUL, MINNESOTA
CORPS OF ENGINEERS
ST. PAUL DISTRICT

MISSISSIPPI RIVER - POOL 7
LONG LAKE HREP REHABILITATION
ENVIRONMENTAL
PROFILES - CHANNEL, MAINTENANCE ROAD AND ACCESS ROAD

DRAWING NUMBER:
M-P7-
04/004
SHT 5 OF 10

AS-BUILT

NOTES:

1. ALL ELEVATIONS 1912 ADJUSTED N.G.V.D.
2. SITE IS HIGHLY ERODED. STRIPPING (DEPTH APPROXIMATELY 6") WILL BE DETERMINED IN THE FIELD BY GOVERNMENT PERSONNEL. NO STRIPPING BELOW WATERLINE WILL BE REQUIRED.
3. FOR CHINKED RIPRAP, REQUIRED IN ROAD AREAS, 10' IN WIDTH, USE AGGREGATE SURFACE MATERIAL TO FILL RIPRAP VOIDS, COMPACT, AND OVERBUILD BY 6" ABOVE TOP OF RIPRAP.

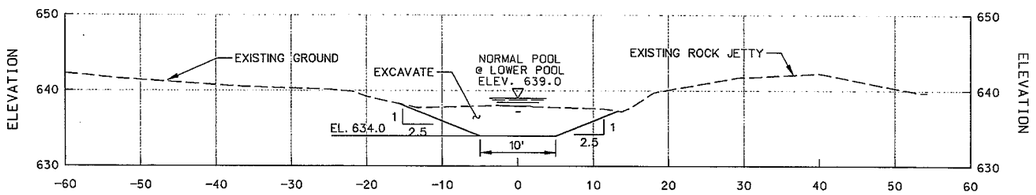

SECTION 1 / 04/002
STATION C 0+30
SCALE: AS SHOWN

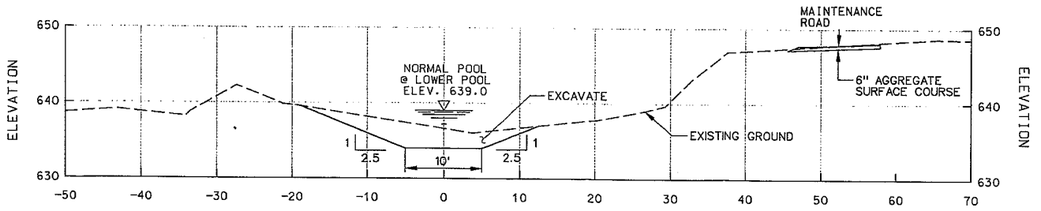

SECTION 2 / 04/002
STATION C 1+75
SCALE: AS SHOWN

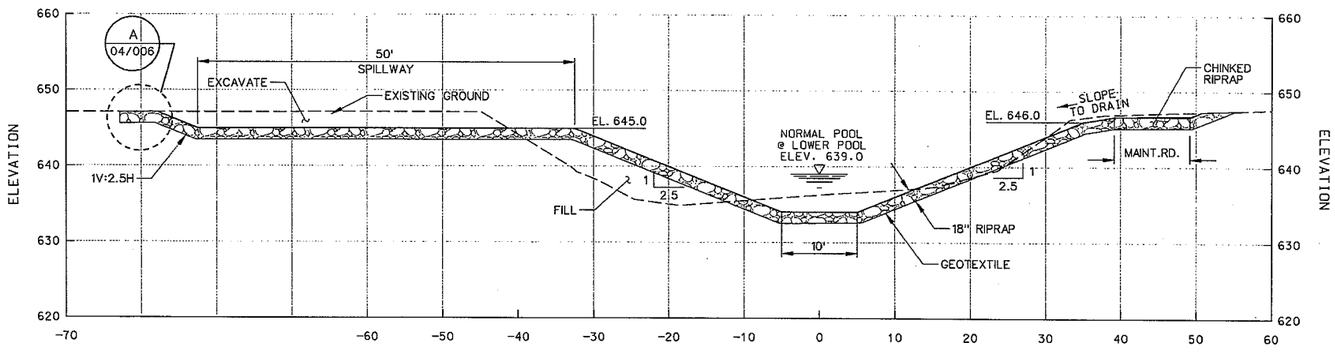

SECTION 3 / 04/002
STATION C 2+80
SCALE: AS SHOWN

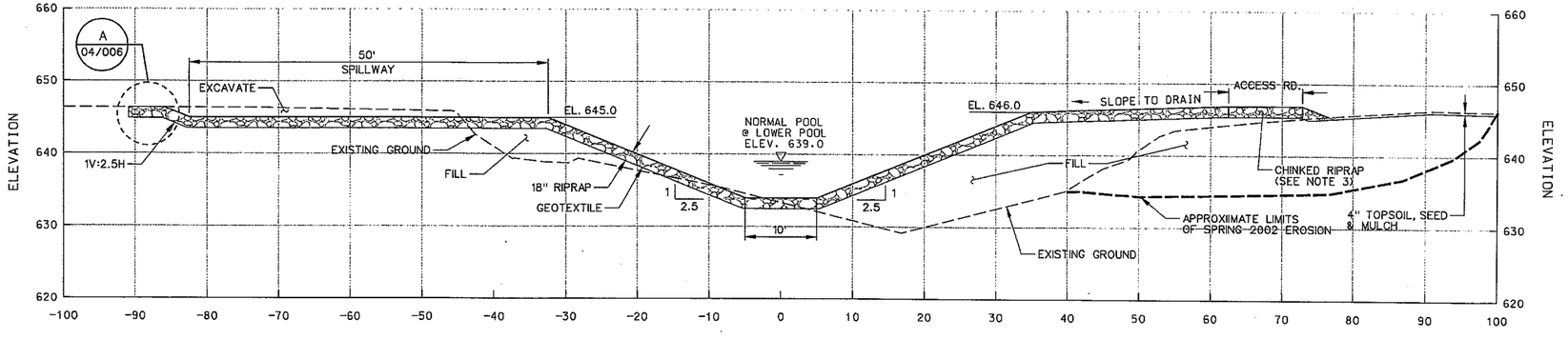

SECTION 4 / 04/002
STATION C 4+00
SCALE: AS SHOWN

US Army Corps of Engineers
St. Paul District

Symbol	Description	Date	Appr.
	AS-BUILT AS OF JULY 2003		

DESIGNED: TMG/JJF
CHECKED: TLW
DRAWN: TLW/TMG
DESIGNED: JSH
CHECKED: JSH
ED-D
ED-H

SCALE: AS SHOWN
DATE: FEB 2002
CADD FILE NAME: M7AG30405.DGN
SOL. NO: DACW37-02-R-0002
AE APPROVING OFFICIAL:

DEPARTMENT OF THE ARMY
ST. PAUL, MINNESOTA
CORPS OF ENGINEERS
ST. PAUL DISTRICT

MISSISSIPPI RIVER - POOL 7
LONG LAKE HREP REHABILITATION
ENVIRONMENTAL
SECTIONS
CHANNEL, RIPRAP AND ROADS

DRAWING NUMBER:
M-P7-
04/005

SHT 6 OF 10

AS-BUILT

NOTES:

1. ALL ELEVATIONS 1912 ADJUSTED N.G.V.D.

2. SITE IS HIGHLY ERODED. STRIPPING (DEPTH APPROXIMATELY 6") WILL BE DETERMINED IN THE FIELD BY GOVERNMENT PERSONNEL. NO STRIPPING BELOW WATERLINE WILL BE REQUIRED.

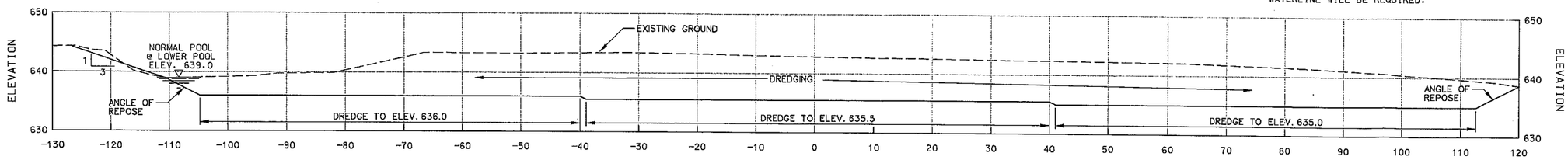

SECTION 7 / 04/003
SANDBAR
SCALE: AS SHOWN

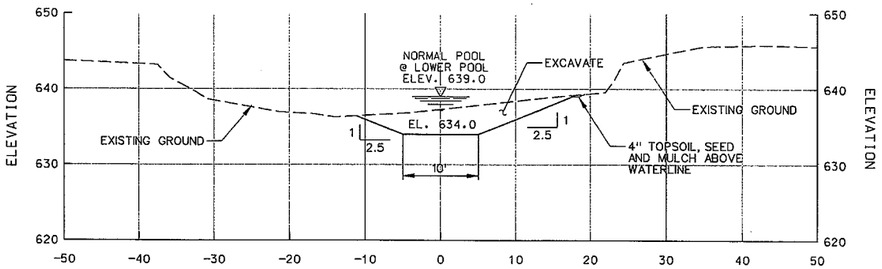

SECTION 6 / 04/002
STATION C 6+60
SCALE: AS SHOWN

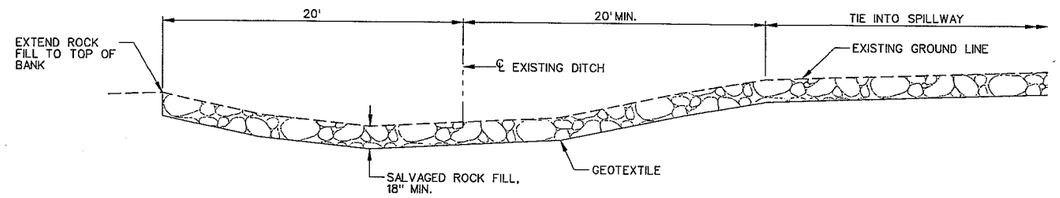

PROFILE
ROCK LINER
SCALE: NONE

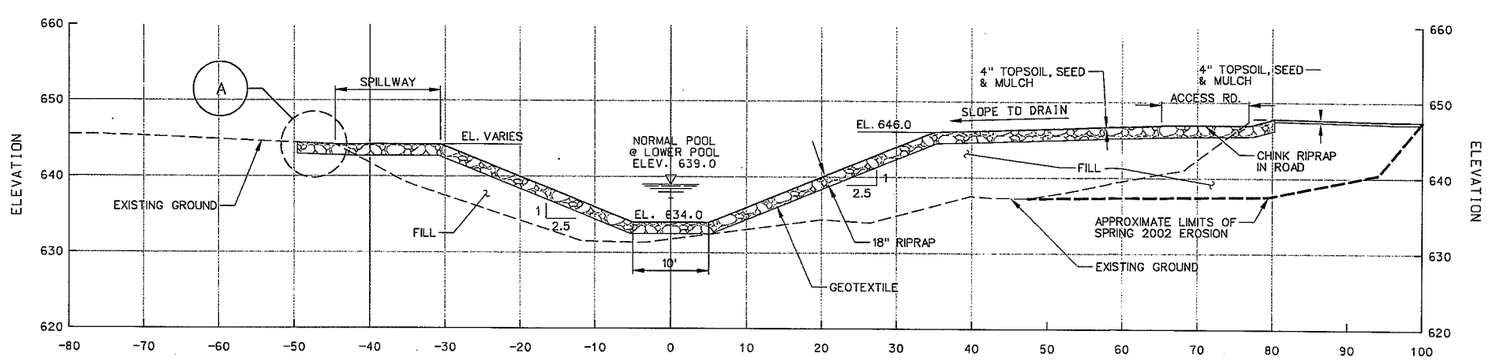

SECTION 5 / 04/002
STATION C 5+00
SCALE: AS SHOWN

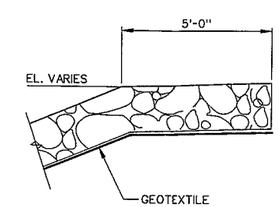

DETAIL A
RIPRAP TERMINATION, TYPICAL
SCALE: NONE

US Army Corps of Engineers
St. Paul District

Symbol	Description	Date	Appr.
	AS-BUILT AS OF JULY 2003		

DESIGNED: TMG/JJF
CHECKED: TLW
DRAWN: TLW/TMG
DESIGNED: JSH
CHECKED: JSH
SCALE: AS SHOWN
DATE: FEB 2002
CADD FILE NAME: M7AG30406.DGN
SOL. NO: DACW37-02-R-0002
AE APPROVING OFFICIAL:

DEPARTMENT OF THE ARMY
ST. PAUL, MINNESOTA
CORPS OF ENGINEERS
ST. PAUL DISTRICT

MISSISSIPPI RIVER - POOL 7
LONG LAKE HREP REHABILITATION
ENVIRONMENTAL
CHANNEL, RIPRAP, ROADS AND SANDBAR SECTIONS

DRAWING NUMBER:
M-P7-04/006

SHT 7 OF 10

AS-BUILT

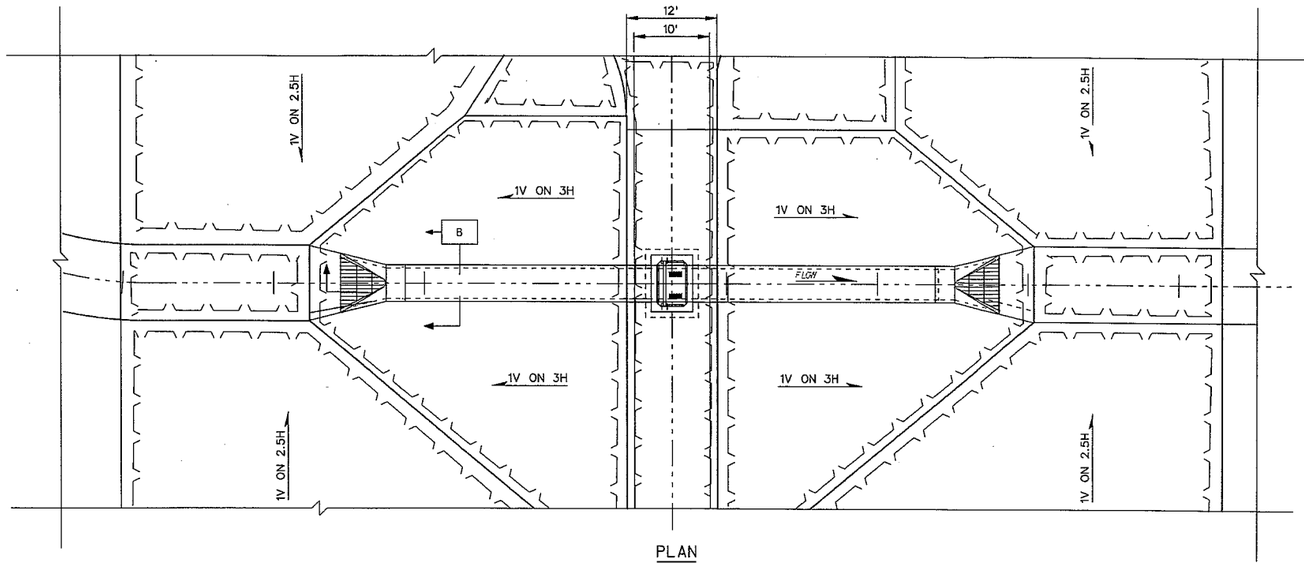

PLAN
INLET
SCALE: 1" = 10'-0"

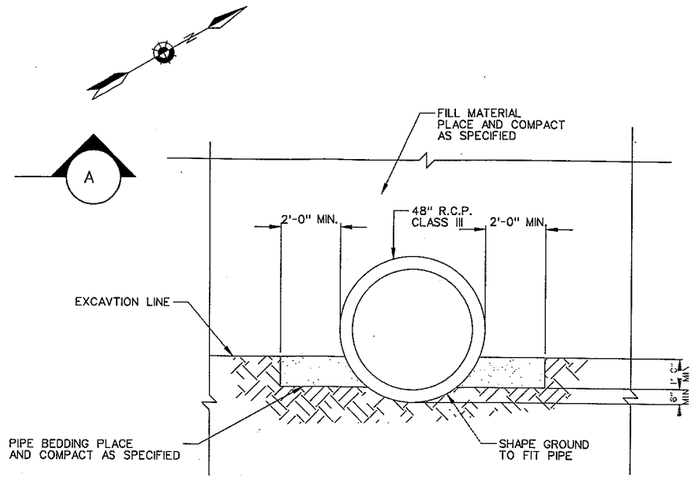

SECTION
R.C.P. BEDDING, TYP.
SCALE: 1/2" = 1'-0"
B

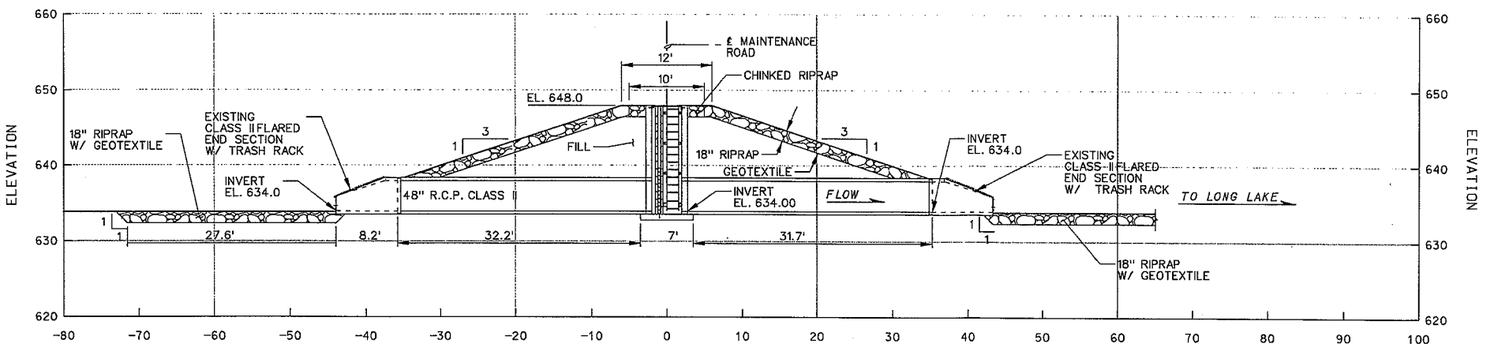

SECTION
SECTION THROUGH INLET
SCALE: 1" = 10'
A

1 0 2 4
SCALE: 1/2" = 1'-0"

10 0 10 20
SCALE IN FEET

US Army Corps of Engineers
St. Paul District

Symbol	Description	Date	Appr.
	AS-BUILT AS OF JULY 2003		

DESIGNED: TMG
DRAWN: TMG
CHECKED: TMG
SCALE: AS SHOWN
CADD FILE NAME: M7AG30407.DGN
SOL. NO: DACW37-02-R-0002
DATE: FEB 2002
DESIGNED: JSH
CHECKED: JSH
AE APPROVING OFFICIAL:

DEPARTMENT OF THE ARMY
ST. PAUL, MINNESOTA
CORPS OF ENGINEERS
ST. PAUL DISTRICT

MISSISSIPPI RIVER - POOL 7
LONG LAKE HREP REHABILITATION
ENVIRONMENTAL
INLET
PLAN AND SECTION

DRAWING NUMBER:
M-P7-
04/007

SHT 8 OF 10

AS-BUILT

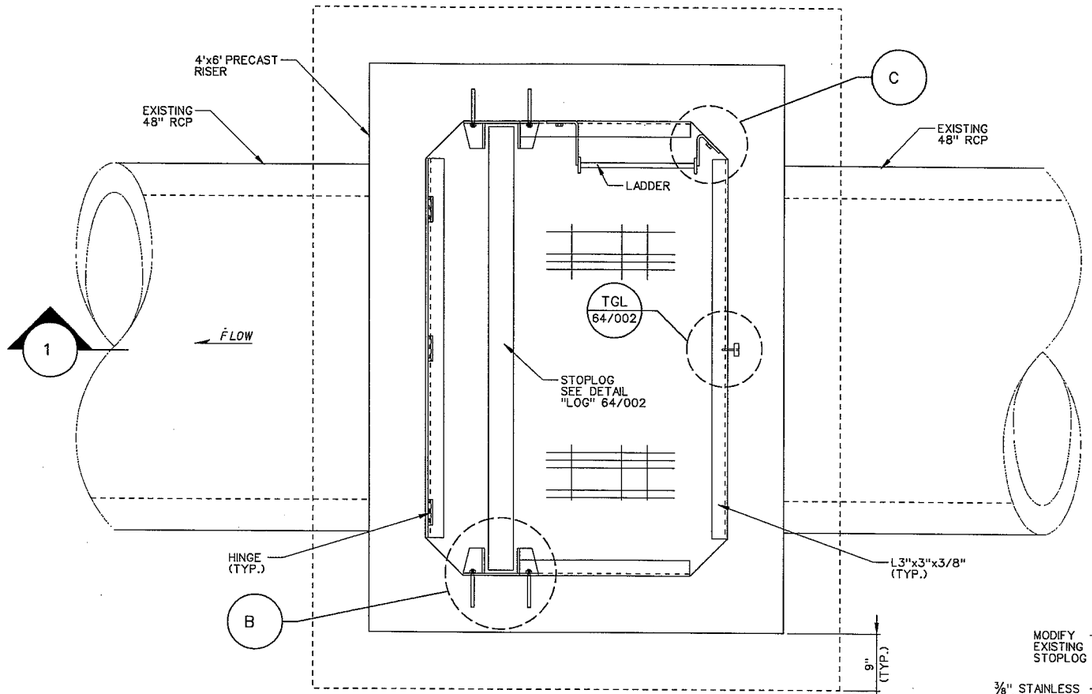

PLAN
CONTROL STRUCTURE
SCALE: 1" = 1'-0"

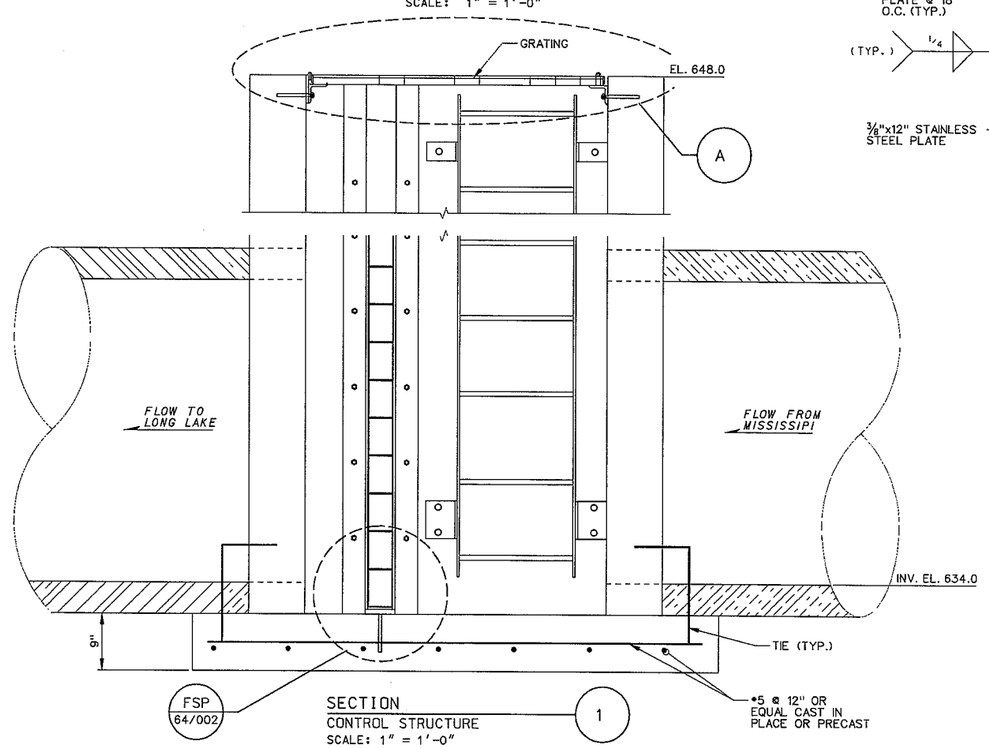

SECTION
CONTROL STRUCTURE
SCALE: 1" = 1'-0"
1

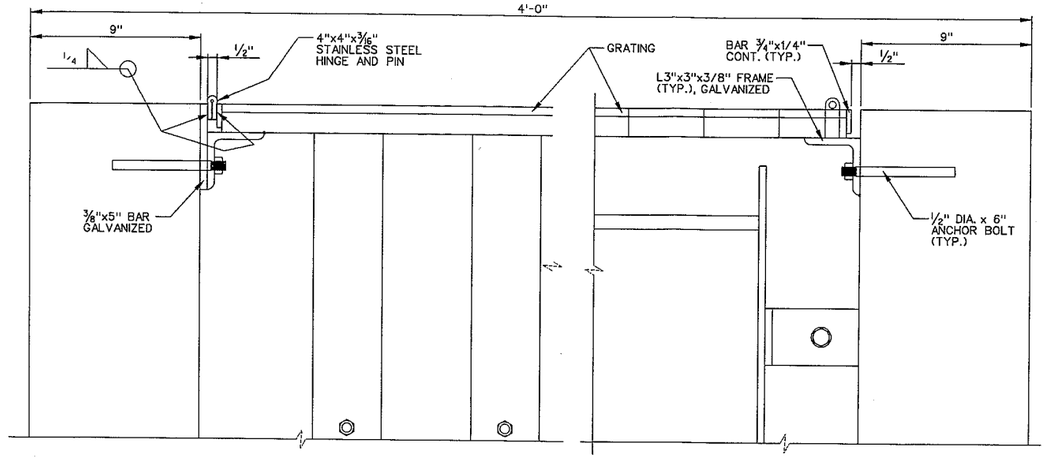

DETAIL
HINGE AND GRATING SUPPORT
SCALE: 3" = 1'-0"
A

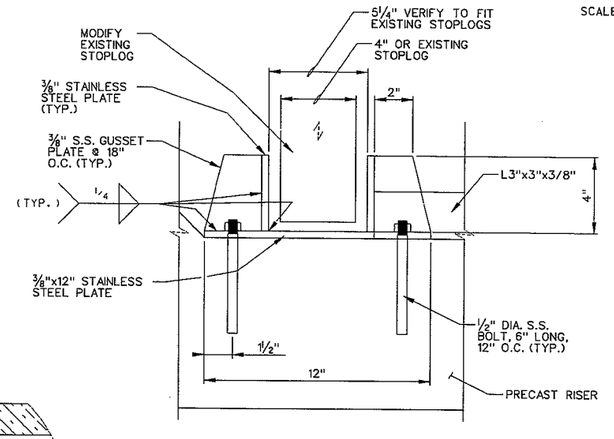

DETAIL
STOPLOG GROOVE
SCALE: 3" = 1'-0"
B

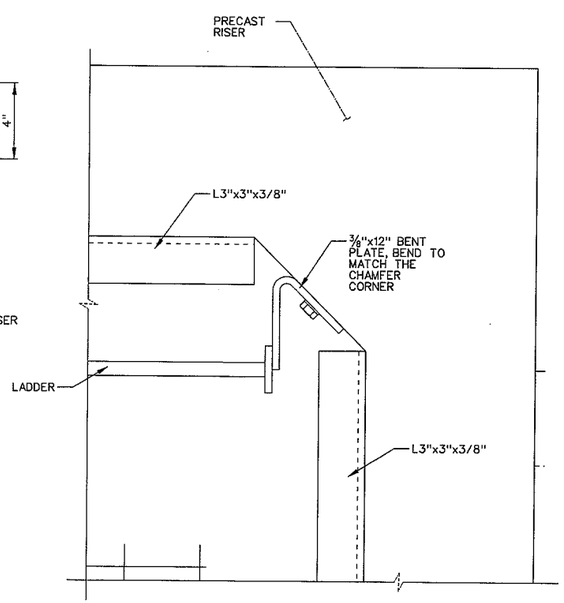

DETAIL
LADDER MOUNTING AT CORNER
SCALE: 3" = 1'-0"
C

1 6" 0 1 2
SCALE: 1" = 1'-0"

US Army Corps of Engineers
St. Paul District

Symbol	Description	Date	Appr.
	AS-BUILT AS OF JULY 2003		

SCALE: AS SHOWN
DATE:
CADD FILE NAME: M7AG164018.DGN
SOL NO: DACW37-02-R-0002
DESIGNED: LSF
DRAWN: NK
CHECKED:
DESIGNED:
CHECKED:
AE APPROVING OFFICIAL:
E0-D
H-03

DEPARTMENT OF THE ARMY
ST. PAUL DISTRICT
CORPS OF ENGINEERS

MISSISSIPPI RIVER - POOL 7
LONG LAKE HREB REHABILITATION
ENVIRONMENTAL
CONTROL STRUCTURE
PLAN, SECTION AND DETAILS

DRAWING NUMBER:
M-P7-64/018
SHT 9 OF 10

AS-BUILT

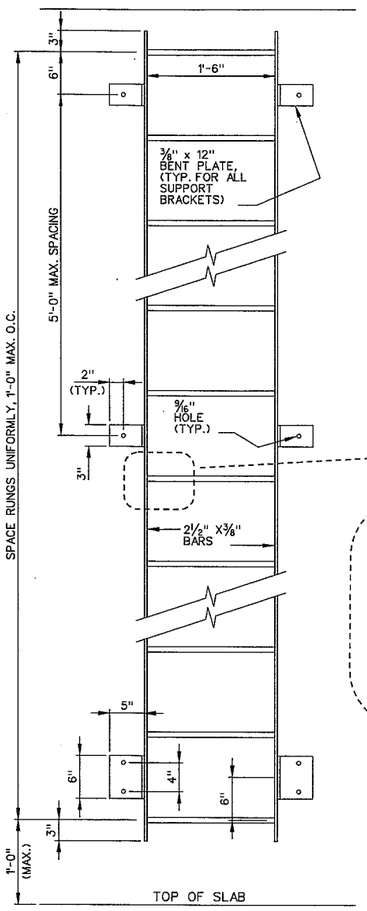

DETAIL
LADDER
SCALE: NONE
LAD

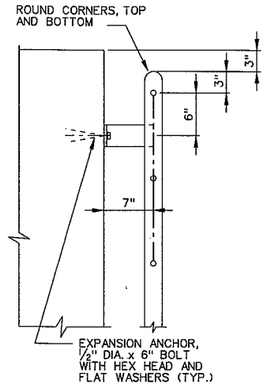

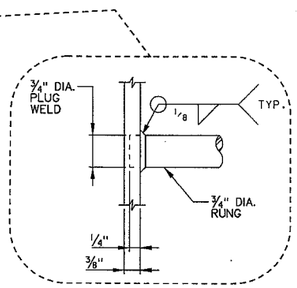

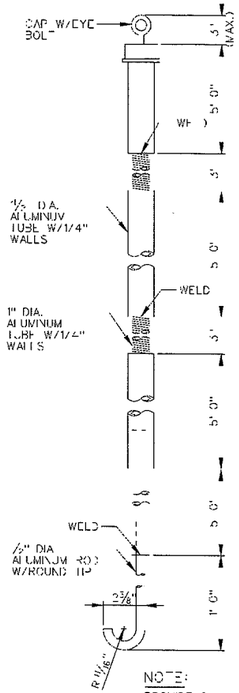

DETAIL
EXISTING STOPLOG HOOK
SCALE: NONE
SH

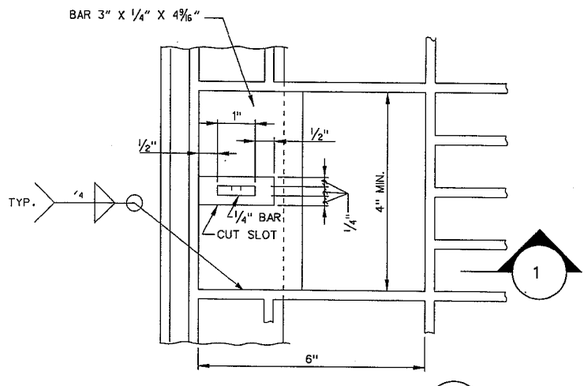

DETAIL
TYPICAL GRATING LOCK
(WITH COVER AND LOCK)
SCALE: NONE
TGL

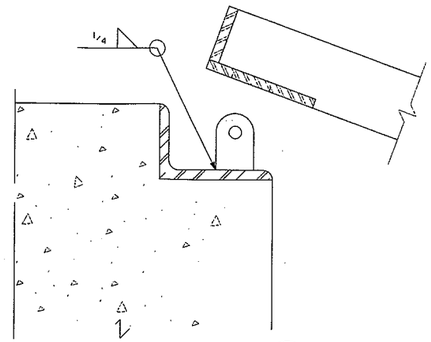

SECTION
GRATING LOCK ASSEMBLY
WITH COVER PARTIALY OPEN
SCALE: NONE
1

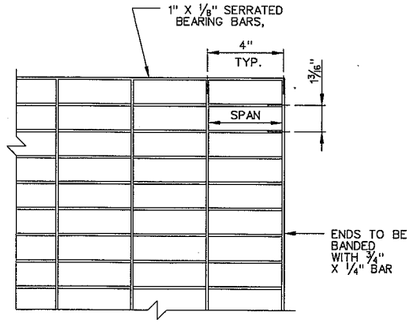

DETAIL
TYP. GRATING LIFTING BAR
SCALE: NONE
GLB

NOTES:

1. PLACE LIFTING BAR TO ALLOW CLEAR ATTACHMENT OF LIFTING HOOK.
2. LIFTING HOOK TO BE AS SPECIFIED WITH 9/16" THROAT AND SPRING LOADED CATCH. VERIFY HOOK TO FIT OPENING AROUND LIFTING BAR.
3. GRATING ARE ALUMINUM.

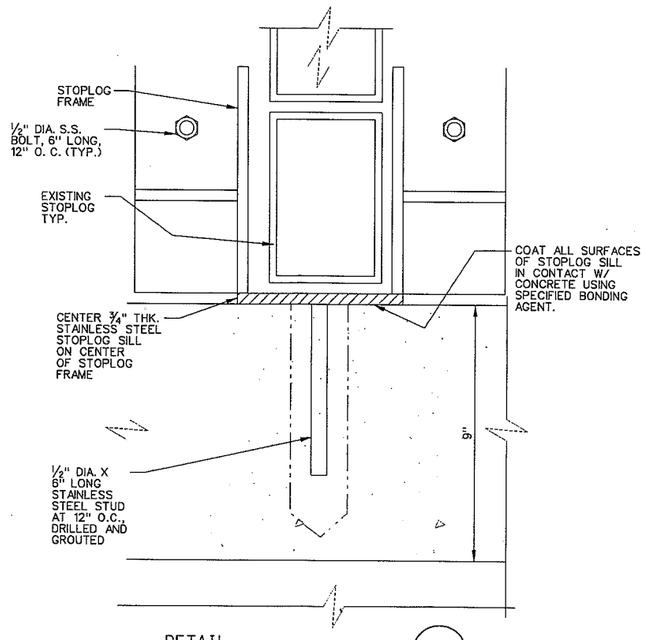

DETAIL
FRAME SILL PLATE
SCALE: NONE
FSP

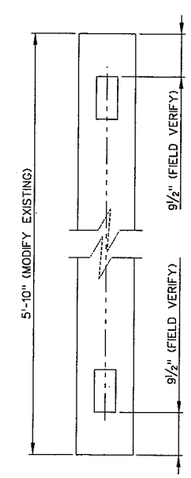

DETAIL
MODIFIED EXISTING STOPLOG
SCALE: NONE
LOG

1 0 2 4 6
SCALE: 3/8" = 1'-0"

US Army Corps of Engineers
St. Paul District

Symbol	Description	Date	Appr.
	AS-BUILT AS OF JULY 2003		

DESIGNED: XXX/XXX
CHECKED: XXX/XXX
DRAWN: XXX/XXX
DESIGNED: XXX/XXX
CHECKED: XXX/XXX
SCALE: AS SHOWN
DATE: FEB 2002
CADD FILE NAME: MXX&S&K&19GN
SOL. NO: DACW37-02-R-0002
AE APPROVING OFFICIAL:

DEPARTMENT OF THE ARMY
ST. PAUL DISTRICT

MISSISSIPPI RIVER - POOL 7
LONG LAKE HREP REHABILITATION
ENVIRONMENTAL
MAIN FACILITY SUPPLEMENT AND INFORMATION

DRAWING NUMBER:
M-P7-C 64/019
SHT 10 OF 10

AS-BUILT

APPENDIX B

MEMORANDUM OF AGREEMENT

MEMORANDUM OF AGREEMENT

BETWEEN

THE UNITED STATES FISH AND WILDLIFE SERVICE

AND

THE DEPARTMENT OF THE ARMY

FOR

ENHANCING FISH AND WILDLIFE RESOURCES

OF THE

UPPER MISSISSIPPI RIVER SYSTEM

AT

LONG LAKE

TREMPEALEAU AND LA CROSSE COUNTIES, WISCONSIN

I. PURPOSE

The purpose of this Memorandum of Agreement (MOA) is to establish the relationships, arrangements, and general procedures under which the U.S. Fish and Wildlife Service (FWS) and the Department of the Army (DOA) will operate in constructing, operating, maintaining, repairing, and rehabilitating the Long Lake separable element of the Upper Mississippi River System - Environmental Management Program (UMRS-EMP).

II. BACKGROUND

Section 1103 of the Water Resources Development Act of 1986, Public Law 99-662, authorizes construction of measures for the purpose of enhancing fish and wildlife resources in the Upper Mississippi River System. Under conditions of Section 906(e) of the Water Resources Development Act of 1986, Public Law 99-662, all construction costs of those fish and wildlife features for the Long Lake project are 100 percent Federal, and all operation, maintenance, repair and rehabilitation costs are to be cost shared 75 percent Federal and 25 percent non-Federal.

III. GENERAL SCOPE

The Long Lake project provides for the construction of a 620-foot channel, with control structure, from the Upper Mississippi River to Long Lake. This would provide direct flows into Long Lake, thereby improving dissolved oxygen conditions in the lake. This should lead to increased use of the area by fish throughout the year.

IV. RESPONSIBILITIES

A. DOA is responsible for:

1. Construction: Construction of the Project which consists of constructing a channel, with control structure, from the Upper Mississippi River to Long Lake.

2. Major Rehabilitation: Any mutually agreed upon rehabilitation of the project that exceeds the annual operation and maintenance requirements identified in the Definite Project Report and that is needed as a result of specific storm or flood events.

3. Construction Management: Subject to and using funds appropriated by the Congress of the United States, DOA will construct the Long Lake project as described in the Definite Project Report, Long Lake, Habitat Rehabilitation and Enhancement, dated July 1991, applying those procedures usually followed or applied in Federal projects, pursuant to Federal laws, regulations, and policies. The FWS will be afforded the opportunity to review and comment on all modifications and change orders prior to the issuance to the contractor of a Notice to Proceed. If DOA encounters potential delays related to construction of the Project, DOA will promptly notify FWS of such delays.

4. Maintenance of Records: DOA will keep books, records, documents, and other evidence pertaining to costs and expenses incurred in connection with construction of the Project to the extent and in such detail as will properly reflect total costs. DOA shall maintain such books, records, documents, and

other evidence for a minimum of three years after completion of construction of the Project and resolution of all relevant claims arising therefrom, and shall make available at its offices, at reasonable times, such books, records, documents, and other evidence for inspection and audit by authorized representatives of the FWS.

B. FWS is responsible for:

1. Operation, Maintenance, and Repair: Upon completion of construction as determined by the District Engineer, St. Paul, the FWS shall accept the Project and shall operate, maintain, and repair the Project as defined in the Definite Project Report entitled "Long Lake Habitat Rehabilitation and Enhancement," dated July 1991, in accordance with Section 906(e) of the Water Resources Development Act, Public Law 99-662.

2. Non-Federal Responsibilities: In accordance with Section 906(e) of the Water Resources Development Act, Public Law 99-662, the FWS shall obtain 25 percent of all costs associated with the operation, maintenance, and repair of the Project from the Wisconsin Department of Natural Resources.

V. MODIFICATION AND TERMINATION

This MOA may be modified or terminated at any time by mutual agreement of the parties. Any such modification or termination must be in writing. Unless otherwise modified or terminated, this MOA shall remain in effect for a period of no more than 50 years after initiation of construction of the Project.

VI. REPRESENTATIVES

The following individuals or their designated representatives shall have authority to act under this MOA for their respective parties:

FWS: Regional Director
U.S. Fish and Wildlife Service
Federal Building, Fort Snelling
Twin Cities, Minnesota 55111

DOA: District Engineer
U.S. Army Engineer District, St. Paul
180 Kellogg Boulevard East, Room 1421
St. Paul, Minnesota 55101-1479

VII. EFFECTIVE DATE OF MOA

This MOA shall become effective when signed by the appropriate representatives of both parties.

THE DEPARTMENT OF THE ARMY

BY: (signature)
RICHARD W. CRAIG
Colonel, Corps of Engineers
St. Paul District

Date: 17 Sept 92

THE U.S. FISH AND WILDLIFE SERVICE

BY: (signature)
Acting Regional Director
U.S. Fish and Wildlife Service

Date: 7/23/92

APPENDIX C

REPLACEMENT SPECIFICATIONS

Rock/Geotextile Replacement

SECTION TABLE OF CONTENTS

DIVISION 02 - SITE WORK

SECTION 02370

STONE PROTECTION

PART 1 GENERAL

1.1 REFERENCES
1.2 SUBMITTALS
1.3 MEASUREMENT AND PAYMENT
1.3.1 Riprap Measurement
1.3.2 Riprap Payment
1.3.2.1 Deductions
1.3.3 Rockfill Measurement
1.3.4 Rockfill Payment
1.3.5 Geotextile

PART 2 PRODUCTS

2.1 MATERIALS
2.1.1 Riprap
2.1.2 Rockfill
2.1.3 Geotextile
2.2 SOURCES AND EVALUATION
2.3 TESTS FOR GRADATION AND SHAPE
2.3.1 Production Methods
2.3.2 Riprap
2.3.2.1 General Requirements
2.3.2.2 Test Method A
2.3.2.3 Test Method B
2.3.2.4 Scales
2.3.2.5 Testing
2.3.2.6 Corrective Action

PART 3 EXECUTION

3.1 GENERAL
3.1.1 Tolerances
3.2 FOUNDATION PREPARATION
3.3 SALVAGE AND PLACEMENT OF ROCKFILL
3.4 PLACEMENT OF GEOTEXTILE
3.5 PLACEMENT OF RIPRAP AND ROCKFILL MATERIALS
3.5.1 General Placement
3.5.2 Material Placement on Geotextile
3.5.3 Material Placement in Water
3.5.4 Material Surface Tolerances

-- End of Section Table of Contents --

SECTION 02370

STONE PROTECTION

PART 1 GENERAL

1.1 REFERENCES

The publications listed below form a part of this specification to the extent referenced. The publications are referred to in the text by basic designation only.

Wisconsin Department of Transportation (WSDOT) Standard Specifications for Highway and Structure Construction, 1996 w/Supplement

WSDOT 645 Geotextile Fabrics

1.2 SUBMITTALS

Government approval is required for submittals with a "G" designation; submittals not having a "G" designation are for information only. When used, a designation following the "G" designation identifies the office that will review the submittal for the Government. The following shall be submitted in accordance with Section 01330 SUBMITTAL PROCEDURES:

SD-01 Preconstruction Submittals

Material Sources; G, ED.

Material Sources as specified in Paragraph: SOURCES AND EVALUATION.

SD-05 Design Data

Geotextile Data.;

Catalog cuts or technical data sheet shall be submitted for the geotextile showing that the product meet the specifications.

Scale Test Report;

Test report for the scale used to weigh the riprap.

Riprap Production Methods;

Methods of processing and handling samples.

1.3 MEASUREMENT AND PAYMENT

1.3.1 Riprap Measurement

Riprap shall be weighed on accurate, approved scales. Before being approved for use, the scales shall have been tested by the Department of

Weights and Measures or by a reliable scale servicing company so as to operate within a degree of error not greater than 1 percent and to be sensitive to a change in load of 1/5 of 1 percent, both percentages being based on the total required weight of material normally weighed as a unit on the scale. A copy of the scale test report shall be submitted to the Contracting Officer. Each load shall be accompanied by a delivery ticket certified by the weighmaster. As a minimum, each ticket shall contain the following information:

(1) Date and time.
(2) Vehicle number.
(3) Gross weight.
(4) Vehicle tare weight.
(5) Net weight.
(6) Job total for material weighed.
(7) Signature of weighmaster.

Delivery tickets shall be collected by the Contractor, and the original copy shall be furnished to the Contracting Officer.

1.3.2 Riprap Payment

Payment will be by the ton (TN) (2,000 pounds avoirdupois) of material acceptably placed within the tolerances specified. Payment will be made at the contract unit price and will constitute full compensation for furnishing the materials and constructing the work complete in place as specified.

1.3.2.1 Deductions

All stone permitted by the Contracting Officer to remain outside the tolerances specified and limits shown will be deducted from the quantity to be paid for. Volume of excess stone will be computed using the average-end-area of excess above the tolerance line specified and limits shown. The excess volume will be deducted from the payment quantity at a rate of 1.45 tons per cubic yard at the unit price per ton.

1.3.3 Rockfill Measurement

The unit of measurement for rockfill will be the cubic yard, computed by the average end area method from cross sections taken before the rockfill is placed and after the rockfill is completed and finished grade lines are established. The measurement will not include:

the volume of rockfill placed below the subgrade as indicated on the drawings,

the volume of rockfill placed outside of the sections as indicated on the drawings,

the volume of rockfill placed prior to the taking of elevations and measurements of the subgrade.

1.3.4 Rockfill Payment

Payment will be by the cubic yard of material acceptably placed within the tolerances specified. Payment will be made at the contract unit price and will constitute full compensation for salvaging the materials and constructing the work complete in place as specified.

1.3.5 Geotextile

Geotextile fabric shall be measured in place to the nearest square yard of protected area as delineated in the drawings. Payment shall be made at the contract unit price and shall constitute full compensation to the Contractor for providing all plant, labor, material, and equipment and performing all operations necessary for the complete and satisfactory installation of the geotextile fabric including securing anchors and associated material, equipment, and operations. No payment will be made for material and associated equipment and operation used in laps or extra length. No payment shall be made for geotextile replaced because of contamination or damage.

PART 2 PRODUCTS

2.1 MATERIALS

2.1.1 Riprap

Riprap gradation shall meet the requirements indicated on the attached FORM 4055. The stone shall be well graded within the limits specified and shall be free from cracks, seams, and other defects that would unduly increase its deterioration from natural causes. Neither the breadth nor thickness of any piece of stone shall be less than one-third of its length. If occasional pieces of stone are observed during placement that are slightly larger than the maximum weight, the material may be permitted provided the gradation tests meet the specifications, the voids are not unduly affected, and surface tolerances are met. Stone for riprap shall have a specific gravity not less than 2.55.

2.1.2 Rockfill

Rockfill is the rock material salvaged from the rock plug as indicated on the drawings.

2.1.3 Geotextile

Geotextile shall meet the requirements of WSDOT 645, Type R except that the apparent opening size shall be 212 max instead of 600 max.

2.2 SOURCES AND EVALUATION

Stone materials shall be produced from the sources listed in the SECTION: ATTACHMENTS. If the Contractor proposes to furnish materials from a source not listed, the Government Geologist will make such investigations and evaluations as necessary to determine whether or not materials meeting the requirements of this project can be produced from the proposed source. Sources from which Contractor proposes to obtain the materials shall be selected and submitted for approval at least 30 days in advance of the time when the material will be required in the work.

2.3 TESTS FOR GRADATION AND SHAPE

2.3.1 Production Methods

The Contractor shall state in writing methods of processing and handling samples, and shall notify the Contracting Officer when production methods are changed.

2.3.2 Riprap

2.3.2.1 General Requirements

Gradation tests shall be performed by the methods and at the frequency listed below. Gradation testing results shall be submitted on the WORKSHEET FOR GRADATION ANALYSIS OF RIPRAP and the gradation curve (form 4055). A blank copy of worksheets is included at the end of this section. The Contracting Officer shall be informed 24 hours before each test is performed. All tests, including failing tests shall be submitted. The Contracting Officer shall receive test results within 24 hours after the test. Tests performed on material which do not meet gradation and shape requirements will not be counted as part of the tests required.

2.3.2.2 Test Method A

Test method A shall consist of weighing all stones larger than 5 pounds in a sample. Five to seven weight classes shall be selected within the range of stone sizes. Each stone shall be weighed and recorded on the worksheet for method A. The weight of stones shall be summed for each weight class; after which calculations and a plot of the gradation shall be completed in accordance with accepted practice for soil and aggregate gradations.

2.3.2.3 Test Method B

Test method B shall consist of separating the stones into 5 to 7 piles, ordered by size. The sample shall be separated on a clean, hard surface that is free of smaller stones that could become mixed with the sample. The stones shall be visually screened to place them into appropriate piles. All stones shall be separated and placed into a pile before weighing. After separating, the smallest and largest rock in each pile shall be weighed and recorded. The stones shall be adjusted as necessary so that the weight classes do not overlap. After adjustment is adequate and weight classes have been established, each pile of stone shall be weighed and recorded on the worksheet for method B. Calculations and a plot of the gradation shall be completed in accordance with accepted practice for soil and aggregate gradations.

2.3.2.4 Scales

Scales shall be accurate to, and shall have resolution to the nearest 0.5 pounds, or to the nearest 1% of the material be weighted.

2.3.2.5 Testing

The minimum gradation tests performed by the Contractor shall be 1 test prior to placement, and 1 test per 400 tons or fraction thereof. The Contractor shall take as many additional tests under the Contractor's quality control program as is needed to ensure that the gradation is being met. Tests performed on materials that do not meet requirements will not be counted as part of the minimum required. Samples shall be obtained from the quarry and tested in accordance with either method A or B. A satisfactory test shall be obtained prior to any hauling and delivery of riprap. Samples shall be taken from stockpiles or loaded trucks, and not directly from conveyers or chutes. The Contracting Officer shall direct the sample location unless waived. The sample shall have a minimum gross weight of 12,000 pounds.

2.3.2.6 Corrective Action

If materials fail to meet gradation or shape requirements, the Contractor shall adjust his operations and verify with necessary tests that acceptable materials are being produced, or he shall propose another source and verify, with necessary tests, that acceptable material can be produced from that source. Payment will not be made for material which fails to meet requirements. Material already in place that fails to meet requirements will be removed by the Contractor at no additional cost to the Government.

PART 3 EXECUTION

3.1 GENERAL

3.1.1 Tolerances

Where tolerances are shown or specified, plus shall be above lines and grades, and minus shall be below lines and grades.

3.2 FOUNDATION PREPARATION

Foundation areas shall be excavated or filled to the lines and grades shown, or otherwise established, within a tolerance of plus or minus 2 inches for areas above the water line and plus or minus 3 inches for areas below the water line. Filling shall be with earth similar to the adjacent material and shall be well compacted. Immediately prior to placing riprap, the prepared subgrade will be inspected by the Contracting Officer and no material shall be placed thereon until that area has been approved.

3.3 SALVAGE AND PLACEMENT OF ROCKFILL

Rockfill shall be carefully salvaged from the existing rock plug as indicated on the drawings. Rockfill shall be placed to construct the Grade Control Structure and shall be placed full thickness between the stations indicated on the drawings beginning at the downstream station and extending upstream to the upstream station or until the material is used up. Any excess rockfill shall be placed downstream in a manner that extends the rockfill section uniformly downstream.

3.4 PLACEMENT OF GEOTEXTILE

Placement of geotextile shall be in accordance with WSDOT 645.3.

3.5 PLACEMENT OF RIPRAP AND ROCKFILL MATERIALS

3.5.1 General Placement

Materials shall be placed to the full surface course thickness in one operation and in such a manner as to avoid displacing the underlying material. The material layer shall generally be placed from slope toe to crest. Placing material in layers shall not be permitted. No heavy equipment shall operate on the material surface. Placing material by dumping into chutes or similar methods likely to cause segregation will not be permitted. The finished mass shall be free from pockets of small stones, clusters or larger stones and excessive voids.

3.5.2 Material Placement on Geotextile

Material shall be placed over the geotextile by methods that do not tear, puncture, or reposition the fabric. Equipment shall be operated so as to minimize the drop height of the stone without contacting and damaging the geotextile. There shall not be more than 1 foot of drop from the bucket to the placement surface. Material shall be placed so that stones do not roll downhill.

3.5.3 Material Placement in Water

Material to be placed under water shall be placed in a systematic manner so as to ensure a continuous uniform layer of well-graded stone of the required thickness. Stone to be placed under water shall not be cast across the surface of the water.

3.5.4 Material Surface Tolerances

Material shall be constructed to the lines and grades shown or established within a tolerance of 8 inches above and 4 inches below the prescribed grade. Surface tolerances for material continuous over an area greater than 200 square feet shall be 3 inches above to 1 inch below the prescribed grade.

-- END OF SECTION --

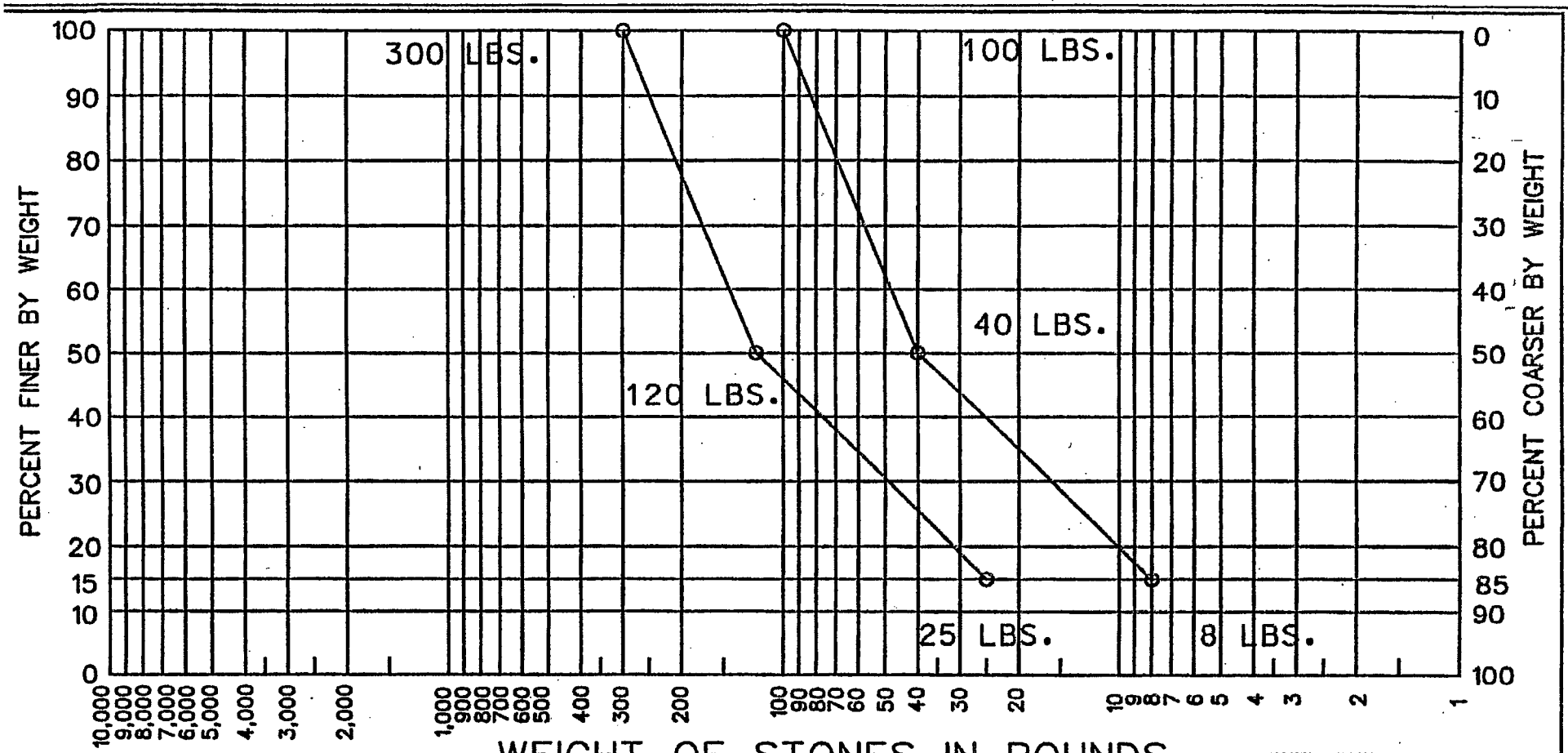

WEIGHT OF STONES IN POUNDS

(ASSUMING STONE SHAPE MIDWAY BETWEEN A SPHERE AND CUBE)

SPECIFIED GRADATION ASSUMES A SPECIFIC GRAVITY OF STONE EQUAL TO 2.65

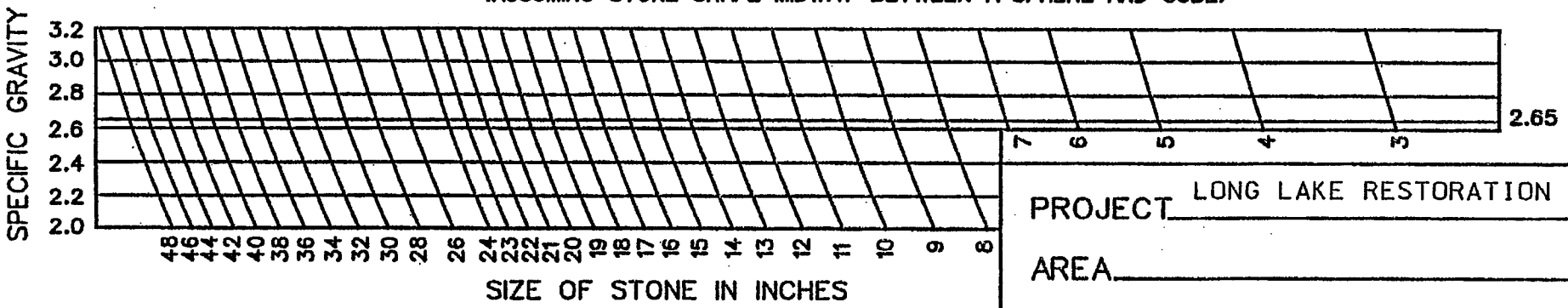

SIZE OF STONE IN INCHES

SPECIFIC GRAVITY OF STONE= [ ]

PROJECT LONG LAKE RESTORATION

AREA

DATE

RIPRAP/ROCKFILL GRADATION CURVE

ENG FORM 4055
JULY 2001

VER GENERATED

SECTION TABLE OF CONTENTS

DIVISION 02 - SITE WORK

SECTION 02731

AGGREGATE SURFACE COURSE

PART 1 GENERAL

1.1 REFERENCES
1.2 MEASUREMENT
1.3 PAYMENT
1.4 DEGREE OF COMPACTION
1.5 SUBMITTALS
1.6 EQUIPMENT
1.7 SAMPLING AND TESTING
1.7.1 Sampling
1.7.2 Testing
1.7.2.1 Gradation
1.7.2.2 Frequency
1.7.3 Approval of Materials
1.8 WEATHER LIMITATIONS

PART 2 PRODUCTS

2.1 AGGREGATES
2.1.1 Aggregate Surface Course Gradation Requirements

PART 3 EXECUTION

3.1 STOCKPILING MATERIALS
3.2 PREPARATION OF UNDERLYING COURSE SUBGRADE
3.3 GRADE CONTROL
3.4 MIXING AND PLACING MATERIALS
3.5 LAYER THICKNESS
3.6 COMPACTION
3.7 SMOOTHNESS TEST
3.8 DENSITY TESTS
3.8.1 Testing Frequency
3.9 CHINKED RIPRAP
3.10 MAINTENANCE

-- End of Section Table of Contents --

SECTION 02731

AGGREGATE SURFACE COURSE

PART 1 GENERAL

1.1 REFERENCES

The publications listed below form a part of this specification to the extent referenced. The publications are referred to in the text by basic designation only.

AMERICAN SOCIETY FOR TESTING AND MATERIALS (ASTM)

ASTM C 117	(1995) Materials Finer Than 75 micrometer (No. 200) Sieve in Mineral Aggregates by Washing
ASTM C 136	(2001) Sieve Analysis of Fine and Coarse Aggregates
ASTM D 75	(1997) Sampling Aggregates
ASTM D 422	(1963; R 1998) Particle-Size Analysis of Soils
ASTM D 1556	(2001) Density and Unit Weight of Soil In-Place by the Sand-Cone Method
ASTM D 1557	(2000) Laboratory Compaction Characteristics of Soil Using Modified Effort (56,000 ft-lbf/cu. ft. (2,700 kN-m/cu. m.))
ASTM D 2922	(2001) Density of Soil and Soil-Aggregate in Place by Nuclear Methods (Shallow Depth)
ASTM D 3017	(2001) Water Content of Soil and Rock in Place by Nuclear Methods (Shallow Depth)
ASTM D 3740	(2001) Minimum Requirements for Agencies Engaged in the Testing and/or Inspection of Soil and Rock as Used in Engineering Design and Construction
ASTM E 11	(2001) Wire-Cloth Sieves for Testing Purposes

STATE OF WISCONSIN DEPARTMENT OF TRANSPORTATION

WSDOT 304	(1996 Edition) Specifications for Highway and Structure Construction

1.2 MEASUREMENT

Aggregate surface course shall be weighed on accurate, approved scales. Before being approved for use, the scales shall have been tested by the Department of Weights and Measures or by a reliable scale servicing company so as to operate within a degree of error not greater than 1 percent and to be sensitive to a change in load of 1/5 of 1 percent, both percentages being based on the total required weight of material normally weighed as a unit on the scale. A copy of the scale test report shall be submitted to the Contracting Officer. Each load shall be accompanied by a delivery ticket certified by the weighmaster. As a minimum, each ticket shall contain the following information:

(1) Date and time.
(2) Vehicle number.
(3) Gross weight.
(4) Vehicle tare weight.
(5) Net weight.
(6) Job total for material weighed.
(7) Signature of weighmaster.

Delivery tickets shall be collected by the Contractor, and the original copy shall be furnished to the Contracting Officer.

1.3 PAYMENT

Payment will be by the ton (TN) (2,000 pounds avoirdupois) of material acceptably placed. Quantities of aggregate surface course as measured above, will be paid for at the respective contract unit prices. Payment will constitute full compensation for the construction and completion of the aggregate surface course, including furnishing all labor and incidentals necessary to complete the work required by this section.

1.4 DEGREE OF COMPACTION

Degree of compaction is a percentage of the maximum density obtained by the test procedure presented in ASTM D 1557 abbreviated herein as present laboratory maximum density.

1.5 SUBMITTALS

Government approval is required for submittals with a "G" designation; submittals not having a "G" designation are for information only. When used, a designation following the "G" designation identifies the office that will review the submittal for the Government. The following shall be submitted in accordance with Section 01330 SUBMITTAL PROCEDURES:

SD-01 Preconstruction Submittals

Equipment;

List of proposed equipment to be used in performance of construction work including descriptive data.

SD-06 Test Reports

Sampling and Testing;

Calibration curves and related test results prior to using the device or

equipment being calibrated. Test results from samples, not less than 30 days before material is required for the work.

1.6 EQUIPMENT

All plant, equipment, and tools used in the performance of the work covered by this section will be subject to approval by the Contracting Officer before the work is started and shall be maintained in satisfactory working condition at all times. The equipment shall be adequate and shall have the capability of producing the required compaction, and meeting the grade controls, thickness controls, and smoothness requirements set forth herein.

1.7 SAMPLING AND TESTING

Sampling and testing shall be the responsibility of the Contractor. Sampling and testing shall be performed by an approved commercial testing laboratory or by the Contractor, subject to approval. If the Contractor elects to establish its own testing facilities, approval of such facilities will be based on compliance with ASTM D 3740. No work requiring testing will be permitted until the Contractor's facilities have been inspected and approved.

1.7.1 Sampling

Sampling for material gradation tests shall be taken in conformance with ASTM D 75. When deemed necessary, the sampling will be observed by the Contracting Officer.

1.7.2 Testing

1.7.2.1 Gradation

Aggregate gradation shall be made in conformance with ASTM C 117, ASTM C 136, and ASTM D 422. Sieves shall conform to ASTM E 11.

1.7.2.2 Frequency

For each aggregate class, one test prior to placing and one test per 100 cy or fraction thereof (in place measure). When any source of materials is changed or deficiencies are found, the initial analysis shall be repeated and the material already placed shall be retested to determine the extent of unacceptable material. All in-place unacceptable material shall be replaced. Unacceptable materials shall be disposed of as unsatisfactory materials.

1.7.3 Approval of Materials

The source of the material to be used for producing aggregates shall be selected 15 days prior to the time the material will be required in the work. Approval of sources not already approved by the Corps of Engineers will be based on an inspection by the Contracting Officer. Tentative approval of materials will be based on appropriate test results on the aggregate source. Final approval of the materials will be based on tests for gradation, liquid limit, and plasticity index performed on samples taken from the completed and compacted surface course.

1.8 WEATHER LIMITATIONS

Aggregate surface courses shall not be constructed when the ambient

temperatures is below 35 degrees F and on subgrades that are frozen or contain frost. It shall be the responsibility of the Contractor to protect, by approved method or methods, all areas of surfacing that have not been accepted by the Contracting Officer. Surfaces damaged by freeze, rainfall, or other weather conditions shall be brought to a satisfactory condition by the Contractor.

PART 2 PRODUCTS

2.1 AGGREGATES

Aggregates shall consist of clean, sound, durable particles of natural gravel, crushed gravel, crushed stone, sand, slag, soil, or other approved materials processed and blended or naturally combined. Aggregates shall be free from lumps and balls of clay, organic matter, objectionable coatings, and other foreign materials. The Contractor shall be responsible for obtaining materials that meet the specification and can be used to meet the grade and smoothness requirements specified herein after all compaction and proof rolling operations have been completed.

2.1.1 Aggregate Surface Course Gradation Requirements

The aggregate surface course material shall meet the gradation requirements of WSDOT 304, gradation 1, 2, or 3 for either crushed gravel or crushed stone.

PART 3 EXECUTION

3.1 STOCKPILING MATERIALS

Prior to stockpiling the material, the storage sites shall be cleared and leveled by the Contractor. All materials, including approved material available from excavation and grading, shall be stockpiled in the manner and at the locations designated. Aggregates shall be stockpiled in such a manner that will prevent segregation. Aggregates and binders obtained from different sources shall be stockpiled separately.

3.2 PREPARATION OF UNDERLYING COURSE SUBGRADE

The subgrade shall be cleaned of all foreign substances. At the time of surface course construction, the subgrade shall contain no frozen material. Ruts or soft yielding spots in the subgrade areas having inadequate compaction and deviations of the surface from the requirements set forth herein shall be corrected by loosening and removing soft or unsatisfactory material and by adding approved material, reshaping to line and grade and recompacting to density requirements specified in Section 02300 EARTHWORK. The completed subgrade shall not be disturbed by traffic or other operations and shall be maintained by the Contractor in a satisfactory condition until the surface course is placed.

3.3 GRADE CONTROL

During construction, the lines and grades including crown and cross slope indicated for the aggregate surface course shall be maintained by means of line and grade stakes placed by the Contractor in accordance with the SPECIAL CONTRACT REQUIREMENTS.

3.4 MIXING AND PLACING MATERIALS

The materials shall be mixed and placed to obtain uniformity of the material and a uniform optimum water content for compaction. The Contractor shall make adjustments in mixing, placing procedures, or in equipment to obtain the true grades, to minimize segregation and degradation, to obtain the desired water content, and to ensure a satisfactory surface course.

3.5 LAYER THICKNESS

The aggregate material shall be placed on the subgrade in layers of uniform thickness. When a compacted layer of 6 inches or less is specified, the material may be placed in a single layer; when a compacted thickness of more than 6 inches is required, no layer shall exceed 6 inches nor be less than 3 inches when compacted.

3.6 COMPACTION

Each layer of the aggregate surface course shall be compacted with approval compaction equipment. The water content during the compaction procedure shall be maintained at optimum moisture content. In locations not accessible to the rollers, the mixture shall be compacted with mechanical tampers. Compaction shall continue until each layer through the full depth is compacted to at least 95 percent of laboratory maximum density. Any materials that are found to be unsatisfactory shall be removed and replaced with satisfactory material or reworked to produce a satisfactory material.

3.7 SMOOTHNESS TEST

The surface of each layer shall not show any deviations in excess of 3/8 inch when tested with a 10 foot straightedge applied both parallel with and at right angles to the centerline of the area to be paved. Deviations exceeding this amount shall be corrected by the Contractor by removing material, replacing with new material, or reworking existing material and compacting, as directed.

3.8 DENSITY TESTS

Density shall be measured in the field in accordance with ASTM D 1556 or ASTM D 2922. For the method presented in ASTM D 2922 the calibration curves shall be checked and adjusted, if necessary, using only the sand cone method as described in paragraph Calibration of the ASTM publication. Tests performed in accordance with ASTM D 2922 result in a wet unit weight of soil and when using this method, ASTM D 3017 shall be used to determine the moisture content of the soil. The calibration curves furnished with the moisture gauges shall also be checked along with density calibration checks as described in ASTM D 3017. The calibration checks of both the density and moisture gauges shall be made by the prepared containers of material method, as described in paragraph Calibration of ASTM D 2922, on each different type of material being tested at the beginning of a job and at intervals, as directed.

3.8.1 Testing Frequency

Optimum Moisture and Laboratory Maximum Density. One test shall be made for each type material or source of material to determine the optimum moisture and laboratory maximum density values.

In-Place Tests. One test per 100 cy or fraction thereof (in place measure). When any deficiencies are found, additional testing shall be

conducted at no additional cost to the Government to determine the extent of unacceptable density. All in-place material with unacceptable density shall be replaced.

3.9 CHINKED RIPRAP

Chinked riprap is riprap where the voids are filled with aggregate surface material within the limits indicated on the drawings.

3.10 MAINTENANCE

The aggregate surface course shall be maintained in a condition that will meet all specification requirements until accepted.

-- End of Section --

Seeding

SECTION TABLE OF CONTENTS

DIVISION 02 - SITE WORK

SECTION 02935

TURF

PART 1 GENERAL

1.1 REFERENCES
1.2 SUBMITTALS
1.3 DELIVERY, INSPECTION, STORAGE, AND HANDLING
1.3.1 Inspection
1.4 MEASUREMENT AND PAYMENT

PART 2 PRODUCTS

2.1 MATERIALS
2.1.1 Seed
2.1.1.1 Seed Classification
2.1.1.2 Seed Mixtures
2.1.1.3 Quality
2.1.1.4 Seed Mixing
2.1.2 Topsoil
2.1.3 Mulch
2.1.3.1 Straw

PART 3 EXECUTION

3.1 GENERAL REQUIREMENTS
3.2 SEEDING TIMES AND CONDITIONS
3.2.1 Seeding Time
3.2.2 Turfing Conditions
3.3 SITE PREPARATION
3.3.1 Grading
3.3.2 Tillage
3.3.2.1 Minimum Depth
3.3.3 Finished Grading
3.3.3.1 Preparation
3.3.3.2 Field Area Debris
3.3.3.3 Protection
3.4 SEEDING
3.4.1 General
3.4.2 Equipment Calibration
3.4.3 Applying Seed
3.4.3.1 Broadcast Seeding
3.4.3.2 Drill Seeding
3.4.3.3 Rolling
3.4.4 Mulch
3.4.4.1 Straw Mulch
3.4.4.2 Mechanically Anchoring
3.5 EROSION CONTROL
3.5.1 Erosion Control Material

3.5.2 Temporary Turf Cover
3.5.2.1 General
3.5.2.2 Application
3.6 RESTORATION AND CLEAN UP
3.6.1 Restoration
3.6.2 Clean Up
3.7 PROTECTION OF TURFED AREAS
3.8 TURF ESTABLISHMENT PERIOD
3.8.1 Commencement
3.8.2 Satisfactory Stand of Turf
3.8.2.1 Seeded Area
3.8.3 Maintenance During Establishment Period
3.8.3.1 General
3.8.3.2 Mowing
3.8.3.3 Repair
3.8.3.4 Maintenance Report
3.9 FINAL ACCEPTANCE
3.9.1 Preliminary Inspection
3.9.2 Final Inspection

-- End of Section Table of Contents --

SECTION 02935

TURF

PART 1 GENERAL

1.1 REFERENCES

The publications listed below form a part of this specification to the extent referenced. The publications are referred to in the text by basic designation only.

AGRICULTURAL MARKETING SERVICE (AMS)

AMS-01 (Amended thru: Aug 1988) Federal Seed Act Regulations (Part 201-202)

1.2 SUBMITTALS

Government approval is required for submittals with a "G" designation; submittals not having a "G" designation are for information only. When used, a designation following the "G" designation identifies the office that will review the submittal for the Government. The following shall be submitted in accordance with Section 01330 SUBMITTAL PROCEDURES:

SD-01 Preconstruction Submittals

Equipment List;

A list of proposed pesticide application, seeding and mulching equipment to be used in performance of turfing operation, including descriptive data and calibration tests.

Application of Other Materials;

Plan for application or use of mulch and erosion control measures with proposed sequence, methods to be used, products or materials, application rate, and other information related to the establishment of turf.

SD-03 Product Data

Manufacturer's Literature;

Manufacturer's literature discussing physical characteristics, application and installation instructions for erosion control material, and for chemical treatment material.

SD-07 Certificates

Certificates of compliance certifying that materials meet the requirements specified, prior to the delivery of materials. Certified copies of the reports for the following materials shall be included:

Seed;

For mixture, percent pure live seed, minimum percent germination and hard seed, maximum percent weed seed content, date tested and state certification.

Topsoil;

For pH, particle size, chemical analysis and mechanical analysis.

SD-10 Operation and Maintenance Data

Maintenance Report;

Written record of maintenance work performed.

1.3 DELIVERY, INSPECTION, STORAGE, AND HANDLING

1.3.1 Inspection

Seed shall be inspected upon arrival at the job site by the Contractor for conformity to type and quality in accordance with paragraph MATERIALS. Other materials shall be inspected for meeting specified requirements and unacceptable materials shall be removed from the job site.

1.4 MEASUREMENT AND PAYMENT

Turf establishment, including topsoil and seed for seeded areas within the prescribed limits will be measured by the square yard in place. Payment will constitute full compensation for the topsoil in place and will include costs for seeding and work incidental to the seeding. Topsoil and seeding used to restore disturbed areas outside the prescribed limits will not be measured for payment.

PART 2 PRODUCTS

2.1 MATERIALS

2.1.1 Seed

2.1.1.1 Seed Classification

State-approved seed of the latest season's crop shall be provided in original sealed packages bearing the producer's guaranteed analysis for percentages of mixture, purity, germination, hard seed, weed seed content, and inert material. Labels shall be in conformance with AMS-01 and applicable state seed laws.

2.1.1.2 Seed Mixtures

Seed mixtures shall be proportioned by weight as follows:

Botanical Name	Common Name	Pure Live Seed (pounds/acre) Drilled Seed	Broadcast Seed
Grasses:			
Andropogon gerardi	Big bluestem	4	6
Bromus kalmii	Kalm's brome	3	5
Elymus canadensis	Canada wild rye	3	5
Sorghastrum nutans	Indian grass	3	4
Calamagrostis canadensis	Bluejoint reedgrass	3	4
Avena sativa	Oats	20	25

Botanical Name	Common Name	Pure Live Seed (pounds/acre) Drilled Seed	Broadcast Seed
Forbs:			
Petalostemum spp.	Prairie clovers	4 ounces Bulk	
Helianthus maximiliani	Miximilian sunflower	4 ounces Bulk	
Rudbeckia hirta	Black-eyed Susan	4 ounces Bulk	
Liatris aspera	Rough blazing star	4 ounces Bulk	

2.1.1.3 Quality

Weed seed shall not exceed 1 percent by weight of the total mixture. Wet, moldy, or otherwise damaged seed shall be rejected.

2.1.1.4 Seed Mixing

The field mixing of seed shall not be allowed.

2.1.2 Topsoil

Topsoil shall be as specified in Section 02300.

2.1.3 Mulch

Mulch shall be free from weeds, mold, and other deleterious materials.

2.1.3.1 Straw

Straw shall be stalks from oats, furnishedin air-dry condition and with a consistency for placing with commercial mulch-blowing equipment.

PART 3 EXECUTION

3.1 GENERAL REQUIREMENTS

The Contractor shall be responsible to carry out turfing operations to achieve the requirements for a satisfactory stand of turf as defined in paragraph TURF ESTABLISHMENT PERIOD.

3.2 SEEDING TIMES AND CONDITIONS

3.2.1 Seeding Time

Seed shall be sown from April 20 to June 15 or from October 1 to November 15.

3.2.2 Turfing Conditions

Turf operations shall be performed only during periods when beneficial results can be obtained. When drought, excessive moisture or other unsatisfactory conditions prevail, the work shall be stopped when directed. When special conditions warrant a variance to the turf operations, proposed times shall be submitted to and approved by the Contracting Officer.

3.3 SITE PREPARATION

3.3.1 Grading

The Contracting Officer shall verify that finished grades are as indicated on drawings, and the placing of topsoil and the smooth grading has been completed in accordance with Section 02300 EARTHWORK.

3.3.2 Tillage

3.3.2.1 Minimum Depth

Soil on slopes gentler than 3-horizontal-to-1-vertical shall be tilled to a minimum depth of 4 inches. On slopes between 3-horizontal-to-1-vertical and 1-horizontal-to-1 vertical, the soil shall be tilled to a minimum depth of 2 inches by scarifying with heavy rakes, or other method. On slopes 1-horizontal-to-1 vertical and steeper, no tillage is required.

3.3.3 Finished Grading

3.3.3.1 Preparation

Turf areas shall be filled as needed or have surplus soil removed to attain the finished grade. Drainage patterns shall be maintained as indicated on drawings. Turf areas compacted by construction operations shall be completely pulverized by tillage. Soil used for repair of erosion or grade deficiencies shall conform to topsoil requirements specified in Section 02300 EARTHWORK. Finished grade shall be 1 inch below the adjoining grade of any surfaced area. New surfaces shall be blended to existing areas.

3.3.3.2 Field Area Debris

Field areas shall have debris and stones larger than 3 inches in any dimension removed from the surface.

3.3.3.3 Protection

Finished graded areas shall be protected from damage by vehicular or pedestrian traffic and erosion.

3.4 SEEDING

3.4.1 General

Prior to seeding, any previously prepared seedbed areas compacted or damaged by interim rain, traffic or other cause, shall be reworked to restore the ground condition previously specified. Seeding operations shall not take place when the wind velocity will prevent uniform seed distribution.

3.4.2 Equipment Calibration

The equipment to be used and the methods of turfing shall be subject to the approval of the Contracting Officer prior to commencement of turfing operations. Immediately prior to the commencement of turfing operations, the Contractor shall conduct turfing equipment calibration tests in the presence of the Contracting Officer.

3.4.3 Applying Seed

3.4.3.1 Broadcast Seeding

Broadcast seeding is only permitted upon approval of the Contracting Officer. Seed shall be uniformly broadcast using broadcast seeders. Half of seed shall be broadcast in one direction, and the remainder at right angles to the first direction. Seed shall be covered to an average depth of 1/4 inch by disk harrow, steel mat drag, cultipacker, or other approved device.

3.4.3.2 Drill Seeding

Seed shall be uniformly drilled to an average depth of 1/2 inch using equipment having drills not more than 6-1/2 inches apart. Row markers shall be used with the drill seeder.

3.4.3.3 Rolling

Immediately after seeding, except for slopes 3-horizontal-to-1 vertical and greater, the entire area shall be firmed with a roller not exceeding 90 pounds for each foot of roller width. Areas seeded with seed drills equipped with rollers shall not be rolled.

3.4.4 Mulch

3.4.4.1 Straw Mulch

Straw mulch shall be spread uniformly at the rate of 2 tons per acre. Mulch shall be spread by hand, blower-type mulch spreader or other approved method. Mulching shall be started on the windward side of relatively flat areas or on the upper part of a steep slope and continued uniformly until the area is covered. The mulch shall not be bunched. All seeded areas shall be mulched on the same day as the seeding.

3.4.4.2 Mechanically Anchoring

Immediately following spreading, the mulch shall be anchored to the soil by a V-type-wheel land packer, a scalloped-disk land packer designed to force mulch into the soil surface, or other suitable equipment.

3.5 EROSION CONTROL

3.5.1 Erosion Control Material

Erosion control material, where indicated or required, shall be installed in accordance with manufacturer's instructions. Placement of the erosion control material shall be accomplished without damage to installed material or without deviation to finished grade.

3.5.2 Temporary Turf Cover

3.5.2.1 General

When there are contract delays in the turfing operation or a quick cover is required to prevent erosion, the areas designated for turf shall be seeded with a temporary seed as directed by the Contracting Officer.

3.5.2.2 Application

When no other turfing materials have been applied, the quantity of one half of the required soil amendments shall be applied and the area tilled in accordance with paragraph SITE PREPARATION. Seed shall be uniformly

broadcast and applied at the rate of 0.5 pounds per 1000 square feet. The area shall be watered as required.

3.6 RESTORATION AND CLEAN UP

3.6.1 Restoration

Existing turf areas, pavements and facilities that have been damaged from the turfing operation shall be restored to original condition at Contractor's expense.

3.6.2 Clean Up

Excess and waste material shall be removed from the planting operation and shall be disposed of off the site. Adjacent paved areas shall be cleaned.

3.7 PROTECTION OF TURFED AREAS

Immediately after turfing, the area shall be protected against traffic or other use by erecting barricades and providing signage as required, or as directed by the Contracting Officer.

3.8 TURF ESTABLISHMENT PERIOD

3.8.1 Commencement

The Turf Establishment Period for establishing a healthy stand of turf shall begin on the first day of work under this contract and shall end three (3) months after the last day of turfing operations required by this contract for spring seeding and nine (9) months after the last day of turfing operations required by this contract for fall seeding. Written calendar time period shall be furnished to the Contracting Officer for the Turf Establishment Period. When there is more than one turf establishment period, describe the boundaries of the turfed area covered for each period.

3.8.2 Satisfactory Stand of Turf

3.8.2.1 Seeded Area

b. Field Area: A satisfactory stand of turf from the seeding operation for a field area is defined as a minimum of 10 grass plants per square foot. The total bare spots shall not exceed 2 percent of the total seeded area.

3.8.3 Maintenance During Establishment Period

3.8.3.1 General

Maintenance of the turfed areas shall include eradicating weeds, eradicating insects and diseases, protecting embankments and ditches from erosion, maintaining erosion control materials and mulch, protecting turfed areas from traffic and mowing.

3.8.3.2 Mowing

a. Field Areas: Field areas shall be mowed once after July 1 during the season to a minimum height of 6 inches.

3.8.3.3 Repair

The Contractor shall re-establish as specified herein, eroded, damaged or barren areas. Mulch shall also be repaired or replaced as required.

3.8.3.4 Maintenance Report

A written record shall be furnished to the Contracting Officer of the maintenance work performed.

3.9 FINAL ACCEPTANCE

3.9.1 Preliminary Inspection

Prior to the completion of the Turf Establishment Period, a preliminary inspection shall be held by the Contracting Officer. Time for the inspection shall be established in writing. The acceptability of the turf in accordance with the Turf Establishment Period shall be determined. An unacceptable stand of turf shall be repaired as soon as turfing conditions permit.

3.9.2 Final Inspection

A final inspection shall be held by the Contracting Officer to determine that deficiencies noted in the preliminary inspection have been corrected. Time for the inspection shall be established in writing.

-- End of Section --

Metal Parts

SECTION TABLE OF CONTENTS

DIVISION 05 - METALS

SECTION 05502

METALS: MISCELLANEOUS, STANDARD ARTICLES, SHOP FABRICATED ITEMS

PART 1 GENERAL

1.1 REFERENCES
1.2 MEASUREMENT AND PAYMENT
1.3 SUBMITTALS
1.4 METALWORK AND MACHINE WORK DETAIL DRAWINGS

PART 2 PRODUCTS

2.1 MISCELLANEOUS METALS AND STANDARD METAL ARTICLES
2.1.1 Structural Steel
2.1.2 Pipes
2.1.3 Steel Plates
2.1.3.1 Structural
2.1.4 Stainless Steel
2.1.4.1 Plate, Sheet, and Strip
2.1.4.2 Bars and Shapes
2.1.5 Aluminum
2.1.5.1 Sheets and Plates
2.1.5.2 Bars, Rods and Wire
2.1.5.3 Structural Shapes
2.1.6 Bolts, Nuts, and Washers
2.1.6.1 High-Strength Bolts, Nuts, and Washers
2.1.6.2 Bolts, Nuts, and Washers (Other Than High-Strength)
2.1.7 Expansion Anchors
2.1.8 Floor Gratings
2.1.9 Padlocks and Chain
2.2 NON-METAL MATERIAL ITEMS
2.2.1 Seal Pads
2.3 SHOP FABRICATED METAL ITEMS
2.3.1 Gratings
2.3.2 Recess Frames
2.3.3 Ladders
2.3.4 Ladder Rungs
2.3.5 Stoplog Grooves and Sill
2.3.6 Chain Link Fence Post Mounting Plate and Sleeve
2.3.7 Stop Logs and Stop Log Hooks

PART 3 EXECUTION (Not Applicable)

3.1 INSTALLATION
3.1.1 Alignment and Setting
3.1.2 Workmanship

-- End of Section Table of Contents --

SECTION 05502

METALS: MISCELLANEOUS, STANDARD ARTICLES, SHOP FABRICATED ITEMS

PART 1 GENERAL

1.1 REFERENCES

The publications listed below form a part of this specification to the extent referenced. The publications are referred to in the text by basic designation only.

AMERICAN SOCIETY OF SAFETY ENGINEERS (ASSAE)

ASSAE A14.3	(1992) Safety Requirements for Fixed Ladders

AMERICAN SOCIETY FOR TESTING AND MATERIALS (ASTM)

ASTM A 36/A 36M	(2001) Carbon Structural Steel
ASTM A 53	(2001) Pipe, Steel, Black and Hot-Dipped, Zinc-Coated Welded and Seamless
ASTM A 123	(2001A) Zinc (Hot-Dip Galvanized) Coatings on Iron and Steel Products
ASTM A 240/A 240M	(2001) Heat-Resisting Chromium and Chromium-Nickel Stainless Steel Plate, Sheet, and Strip for Pressure Vessels
ASTM A 276	(2000AE1) Stainless and Heat-Resisting Steel Bars and Shapes
ASTM A 307	(2000) Carbon Steel Bolts and Studs, 60 000 psi Tensile Strength
ASTM A 325	(2002) Structural Bolts, Steel, Heat Treated, 120/105 ksi Minimum Tensile Strength
ASTM A 514/A 514M	(2000A) High-Yield-Strength, Quenched and Tempered Alloy Steel Plate, Suitable for Welding
ASTM A 564/A 564M	(2001) Hot-Rolled and Cold-Finished Age-Hardening Stainless Steel Bars and Shapes
ASTM B 209	(2001) Aluminum and Aluminum-Alloy Sheet and Plate
ASTM B 211	(2000) Aluminum and Aluminum-Alloy Bar, Rod, and Wire
ASTM B 308/B 308M	(2000) Aluminum-Alloy 6061-T6 Standard Structural Shapes

ASTM F 436	(1993; R2000) Hardened Steel Washers

AMERICAN SOCIETY OF MECHANICAL ENGINEERS (ASME)

ASME B18.2.1	(1981; Supple 1991; R 1992) Square and Hex Bolts and Screws (Inch Series)
ASME B18.2.2	(1987; R 1993) Square and Hex Nuts (Inch Series)
ASME B18.21.1	(1994) Lock Washers (Inch Series)
ASME B18.22.1	(1965; R 1990) Plain Washers

COMMERCIAL ITEM DESCRIPTIONS (CID)

CID A-A-1922	(Rev A) Shield, Expansion (Caulking Anchors, Single Lead)
CID A-A-1923	(Rev A) Shield, Expansion (Lag, Machine and Externally Threaded Wedge Bolt Anchors)
CID A-A-1924	(Rev A; Notice 1) Shield, Expansion (Shelf Drilling Tubular Expansion Shell Bolt Anchors)
CID A-A-1925	(Rev A; Notice 1) Shield, Expansion (Nail Anchors)
CID A-A-55614	(Rev A) Shield, Expansion (Non-Drilling Expansion Anchors)
CID A-A-55615	(Rev A) Shield, Expansion (Wood Screw and Lag Bolt Self-Threading Anchors)

NATIONAL ASSOCIATION OF ARCHITECTURAL METAL MANUFACTURERS (NAAMM)

NAAMM MBG 531	(1993) Metal Bar Grating Manual
NAAMM MBG 531S	(1989) Guide Specification for Stainless Steel Grating

1.2 MEASUREMENT AND PAYMENT

The work of this section will not be measured for separate payment and all costs therefore shall be included in the price bid for the item to which the work pertains.

1.3 SUBMITTALS

Government approval is required for submittals with a "G" designation; submittals not having a "G" designation are for information only. When used, a designation following the "G" designation identifies the office that will review the submittal for the Government. The following shall be submitted in accordance with Section 01330 SUBMITTAL PROCEDURES:

SD-02 Shop Drawings

Detail Drawings; G, ED.

Detail drawings for metalwork and machine work shall be submitted and approved prior to fabrication.

SD-03 Product Data

Descriptive Data; G, ED.

Include descriptive data including catalog cuts or other information for the padlocks, seal pads, seal pad adhesive.

1.4 METALWORK AND MACHINE WORK DETAIL DRAWINGS

Detail drawings for metalwork and machine work shall include catalog cuts, templates, fabrication and assembly details and type, grade and class of material as appropriate. Elements of fabricated items inadvertently omitted on contract drawings shall be detailed by the fabricator and indicated on the detail drawings.

PART 2 PRODUCTS

2.1 MISCELLANEOUS METALS AND STANDARD METAL ARTICLES

Miscellaneous metal materials and standard metal articles shall conform to the respective specifications and other designated requirements. Sizes shall be as specified or shown. Where material requirements are not specified, materials furnished shall be suitable for the intended use and shall be subject to approval.

2.1.1 Structural Steel

ASTM A 36/A 36M .

2.1.2 Pipes

ASTM A 53, Type E or S, Grade A or B, seamless or electric-resistance welded, galvanized, nominal size and weight class or outside diameter and nominal wall thickness as shown, plain ends.

2.1.3 Steel Plates

2.1.3.1 Structural

ASTM A 514/A 514M.

2.1.4 Stainless Steel

2.1.4.1 Plate, Sheet, and Strip

ASTM A 240/A 240M,. Plate finish shall be hot-rolled and annealed or heat treated, and blast cleaned or pickled. Sheet and strip finish shall be No. 1.

2.1.4.2 Bars and Shapes

Stainless steel bars and shapes shall conform to the following as specified or shown:

a. ASTM-A$_1$276, UNS S30400, S40500, or S41000 with a maximum carbon content of 0.08 percent, Condition A, hot-finished or cold- finished, Class C.

b. ASTM A 564/A 564M, UNS S17400 or S45000, age-hardened heat treatment condition, hot-finished or cold-finished, Class C.

2.1.5 Aluminum

2.1.5.1 Sheets and Plates

ASTM B 209, Alloy 6061, Temper T6.

2.1.5.2 Bars, Rods and Wire

ASTM B 211, Alloy 6061, Temper T6.

2.1.5.3 Structural Shapes

ASTM B 308/B 308M, Alloy 6061, Temper T6.

2.1.6 Bolts, Nuts, and Washers

Bolts, nuts, and washers shall be of the material, grade, type, class, style and finish indicated or best suited for intended use.

2.1.6.1 High-Strength Bolts, Nuts, and Washers

ASTM A 325.

2.1.6.2 Bolts, Nuts, and Washers (Other Than High-Strength)

a. Bolts and Nuts - ASTM A 307, Grade A,.

b. Bolts - ASME B18.2.1.

c. Nuts - ASME B18.2.2.

d. Washers

(1) Plain Washers - ASME B18.22.1, Type B.

(2) Lock Washer - ASME B18.21.1.

(3) Beveled Washers - ASTM F 436.

2.1.7 Expansion Anchors

CID A-A-1922, CID A-A-1923, CID A-A-1924, CID A-A-1925, CID A-A-55614, CID A-A-55615, type as required, except that nail driven types will not be acceptable. Anchors shall be stainless steel unless otherwise indicated.

2.1.8 Floor Gratings

NAAMM MBG 531 and NAAMM MBG 531S.

a. Finish: steel zinc-coated in accordance with ASTM A 123 after fabrication.

2.1.9 Padlocks and Chain

Padlocks for hinged grating shall be Master No. 160-D or approved equal. Padlocks shall have case hardened steel shackles and solid brass bodies and cylinders. Padlocks shall be keyed alike and each lock shall be furnished with two keys. Chain for securing the padlocks to the hinged grating panel shall be of suitable size for the intended use, shall be electric welded, and shall have a zinc-coated finish.

2.2 NON-METAL MATERIAL ITEMS

Non-metal material items related to the work of shop fabricated metal articles shall conform to the respective specifications and other designated requirements. Sizes shall be as specified or shown. Where material requirements are not specified, materials furnished shall be suitable for the intended use and shall be subject to approval.

2.2.1 Seal Pads

Seal pad material shall be fabricated from material having the same characteristics and material properties as one of the following products. The adhesive used to bond the material to the stop log shall be as recommended by the manufacturer and as submitted and approved.

Compound PO-655 as manufactured by Custom Urethane Elastomers, Inc.

Product 75a as manufactured by Seals Unlimited Inc.

Keelshield (smooth surface) as manufactured by Wendt Productions Inc.

2.3 SHOP FABRICATED METAL ITEMS

Shop fabricated metal items shall conform to the requirements and details as specified or shown and to the workmanship provisions and other applicable fabrication requirements as specified. Unless noted otherwise, all steel items shall be galvanized after fabrication.

2.3.1 Gratings

Grating shall be of the material and size shown, and shall be fabricated in sectional panels of the width and length shown, or as appropriate, to accurately fit within the supporting recess frames. Openings through panels shall be provided as shown or as required. Hinged panels shall be provided with hinges of the type shown or suitable for the application. Steel gratings shall be galvanized after fabrication. The surface of the bearing bars shall be serrated. Gratings shall be as specified in paragraph FLOOR GRATINGS. Edges of gratings and openings through gratings which require the cutting of more than one bearing bar shall be banded. Fasteners shall be of the type recommended by the manufacturer and approved.

2.3.2 Recess Frames

Recess frames shall be fabricated of structural shapes of the type shown. Welded joints in frames shall be ground smooth. Steel frames shall be galvanized after fabrication. Frames shall be anchored to supports in the manner shown and shall not be continuous across contraction or expansion joints.

2.3.3 Ladders

Ladders (including the grab bar) shall be fixed-rail metal ladders conforming to the requirements of ASSAE A14.3 and to details shown. Ladders shall be fabricated of structural steel as shown and shall be galvanized after fabrication. Fabrication of ladders shall consist of solid-section rod rungs fitted into holes in bar side rails and welded. Splices in side rails shall be made using full penetration welds and shall provide a flush and smooth transition between connecting ends. All welds shall be ground smooth. Ladder rails shall be welded to bent-bar supporting brackets anchored to supporting structure as shown. Sealant at base of grab bar anchorage shall be as specified in Section 03307 CONCRETE FOR MINOR STRUCTURES.

2.3.4 Ladder Rungs

Ladder rungs shall be fabricated from steel rods in accordance with the details and shall be galvanized after fabrication.

2.3.5 Stoplog Grooves and Sill

Extra care shall be taken in the fabrication and installation of the stoplog grooves and sills to assure that leakage is kept to a minimum. Some leakage is unavoidable between the stoplogs and the grooves and sill. However, if the leakage is excessive and misalignment of the grooves and/or sills, or their component parts, during fabrication or installation, is a contributing factor to the excessive leakage, the Contractor shall propose corrective measures and shall implement approved corrective measures at no additional cost to the Government. Seal pads shall be bonded to the stoplog grooves as indicated on the drawings with an adhesive recommended by the manufacturer of the seal pad material and suited to the use intended. Stoplog groove and end sill surfaces in contact with concrete shall be coated with a bonding agent equal to Sika Armatec 110.

2.3.6 Chain Link Fence Post Mounting Plate and Sleeve

The chain link fence post mounting plate and sleeve shall be fabricated from steel plates and pipe and shall be galvanized after fabrication.

2.3.7 Stop Logs and Stop Log Hooks

The Contractor is not required to furnish stop logs or stop log hooks. These items are existing from the original contract and are in storage offsite. The existing stop logs are for an 8 foot wide structure. The Contractor shall coordinate with the Contracting Officer to obtain the stop logs and stop log hooks and shall modify existing stop logs to fit in the new structure and shall be responsible to make any adjustments as necessary if they do not fit and operate properly.

PART 3 EXECUTION (Not Applicable)

3.1 INSTALLATION

All parts to be installed shall be thoroughly cleaned. Packing compounds, rust, dirt, grit and other foreign matter shall be removed. Pipe wrenches, cold chisels or other tools likely to cause damage to the surfaces of rods, nuts or other parts shall not be used for assembling and tightening

parts. Bolts and screws shall be tightened firmly and uniformly but care shall be taken not to overstress the threads. When a half nut is used for locking a full nut the half nut shall be placed first and followed by the full nut. Threads of all bolts except high strength bolts, nuts and screws shall be lubricated with an approved lubricant before assembly. Threads of corrosion-resisting steel bolts and nuts shall be coated with an approved antigalling compound. Driving and drifting bolts or keys will not be permitted.

3.1.1 Alignment and Setting

Each structural unit shall be accurately aligned by the use of steel shims or other approved methods so that no binding in any moving parts or distortion of any member occurs before it is fastened in place. The alignment of all parts with respect to each other shall be true within the respective tolerances required.

3.1.2 Workmanship

Workmanship shall be of the highest grade and in accordance with the best modern practices to conform with the specifications for the item of work being furnished.

-- End of Section --