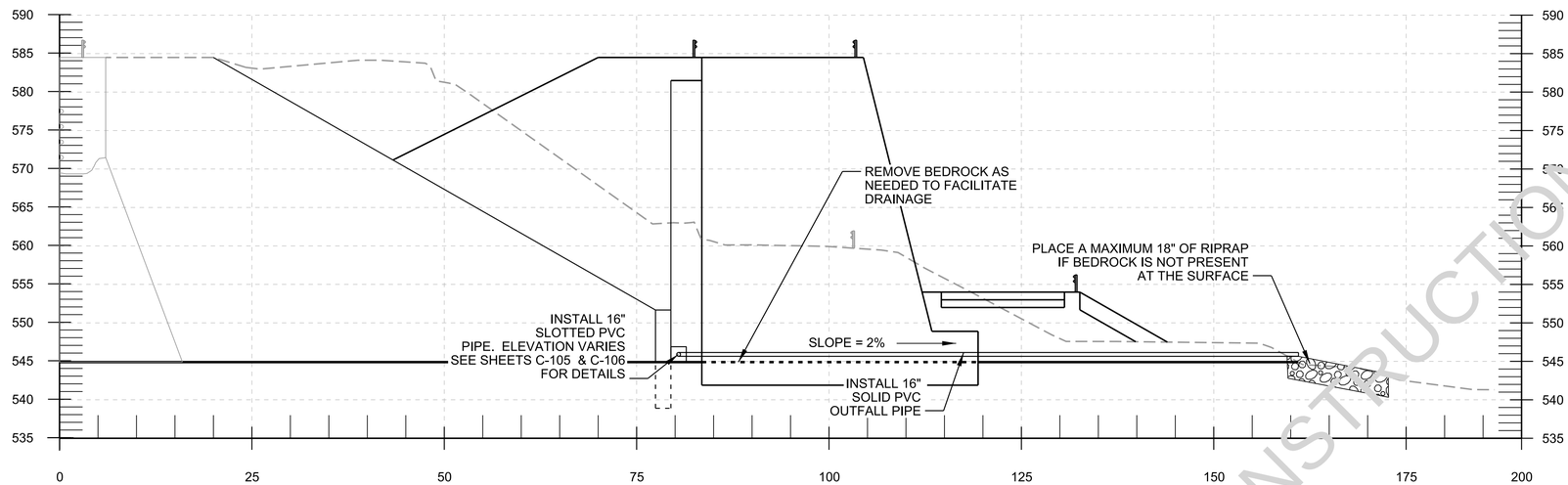

DWG REF(s) : _____

C1 TYPICAL OUTLET SECTION

SCALE : 3/16"=1'-0"

0 4' 8' 12'

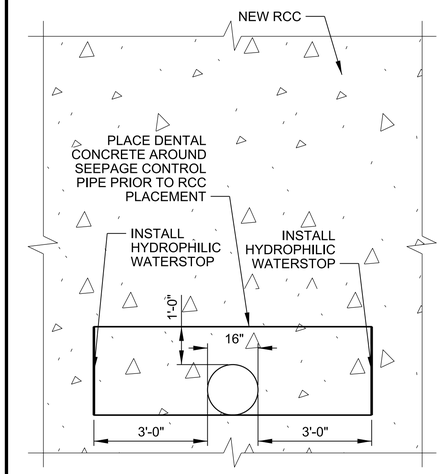

DWG REF(s) : _____

C5 OUTFALL PIPE SECTION

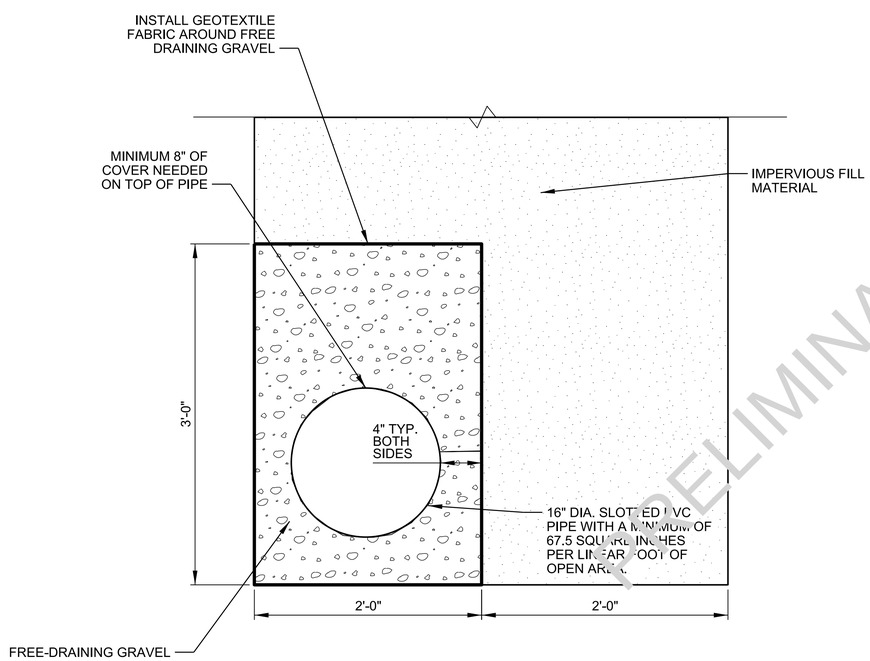

DWG REF(s) : _____

A1 DETAIL

SCALE : NO SCALE

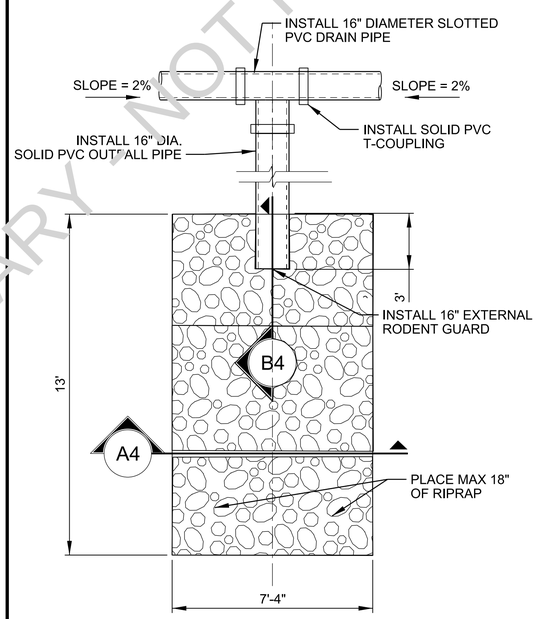

DWG REF(s) : _____

A3 OUTFALL DETAILS - PLAN

NO SCALE

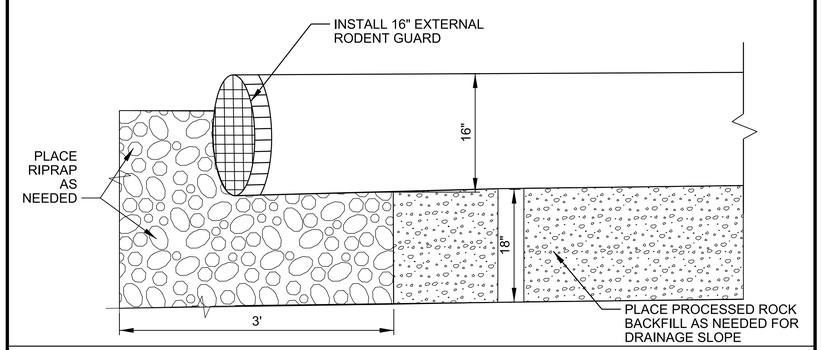

B4 OUTLET PROFILE

NO SCALE

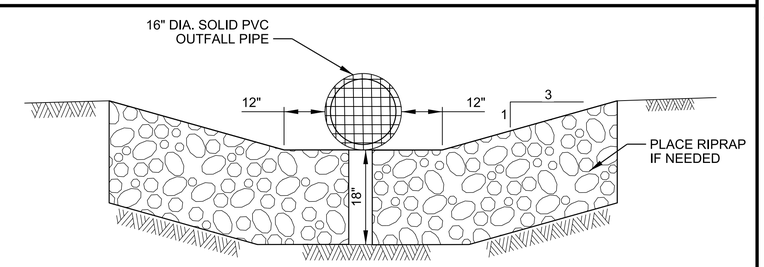

NOTE: IF EXISTING GROUND SURFACE IS BEDROCK, NO RIPRAP IS NEEDED.

DWG REF(s) : _____

A4 OUTLET SECTION

NO SCALE

PRELIMINARY - NOT FOR CONSTRUCTION

US Army Corps of Engineers®

MARK	DESCRIPTION	DATE	APPR.

U.S. ARMY CORPS OF ENGINEERS
ROCK ISLAND DISTRICT
ROCK ISLAND, ILLINOIS

DESIGNED BY: JPF/AJG
DWN BY: AER/MAB
CKD BY: CMG
SUBMITTED BY: JAK
PLOT SCALE: AS SHOWN
PLOT DATE:
SIZE: ANSI D
FILE NAME: LP26_C-502.dgn
DATE: 2013/08/16
SOLICITATION NO.: W912EK-13-R-0040
CONTRACT NO.:
PROJECT CODE: LP26

ILLINOIS WATERWAY
LOCKPORT POOL
LOCKPORT, IL
LOCKPORT POOL MAJOR REHABILITATION
STAGE IC, FOREBAY WALL, PHASE I
NEW WORK DETAILS I

Sheet ID
C-502

Z0MVRBD9
8/20/2013
LP26_C-502.dgn

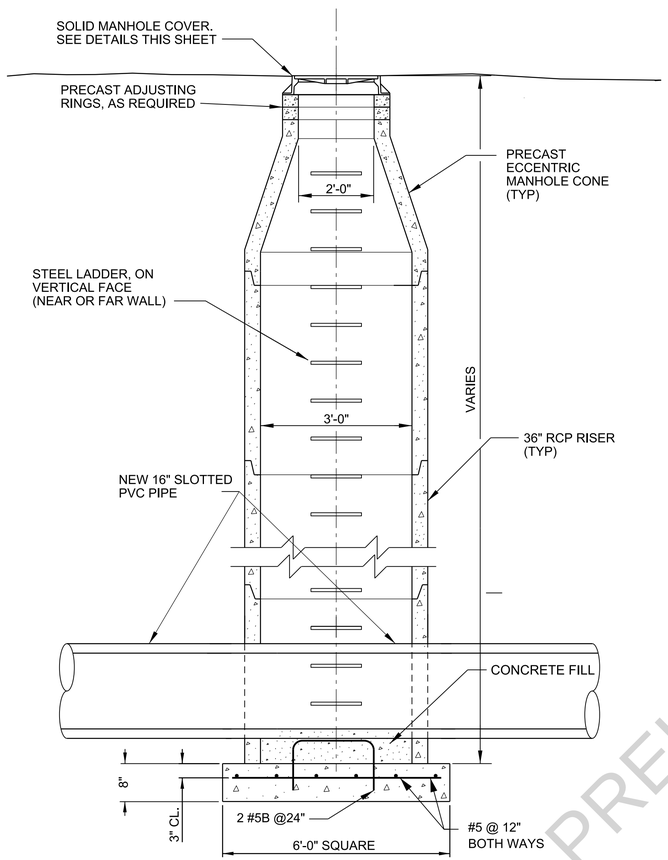

A1 TYPICAL PRECAST MANHOLE

SCALE IN FEET

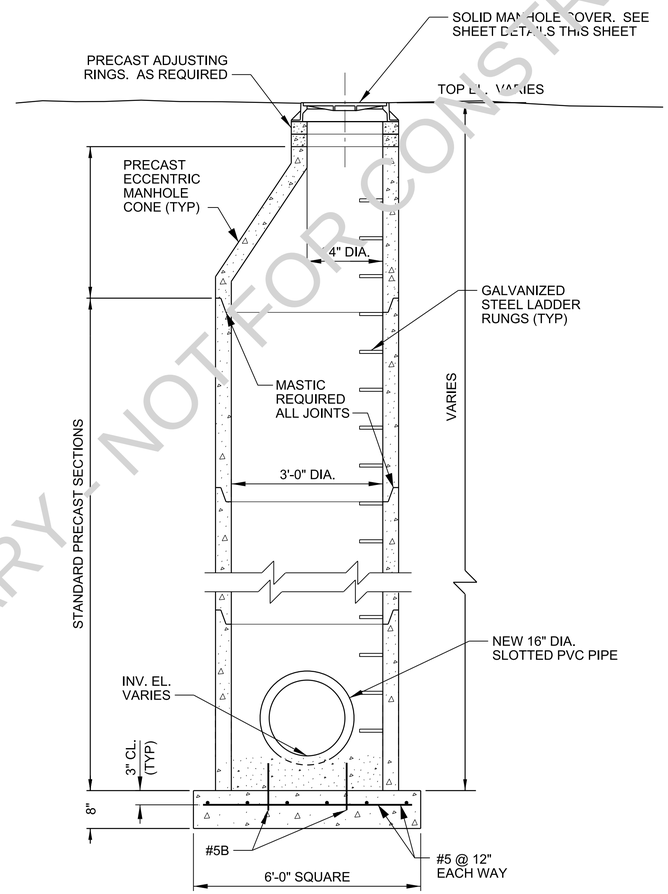

A2 TYPICAL PRECAST MANHOLE

SCALE IN FEET

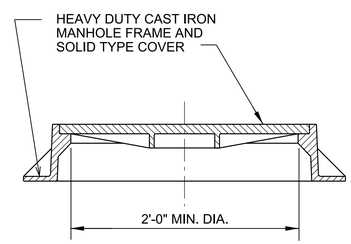

A4 TYPICAL MANHOLE COVER - DETAILS

SCALE IN FEET

PRELIMINARY - NOT FOR CONSTRUCTION

US Army Corps of Engineers®

MARK	DESCRIPTION	DATE	APPR.

U.S. ARMY CORPS OF ENGINEERS
ROCK ISLAND DISTRICT
ROCK ISLAND, ILLINOIS

DESIGNED BY: JPF/AJG
DWN BY: AER/MAB
CKD BY: CMG
SUBMITTED BY: JAK
PLOT SCALE: AS SHOWN
PLOT DATE:
SIZE: ANSI D
FILE NAME: LP26_C-503.dgn
DATE: 2013/08/16
SOLICITATION NO.: W912EK-13-R-0040
CONTRACT NO.:
PROJECT CODE: LP26

ILLINOIS WATERWAY
LOCKPORT POOL
LOCKPORT, IL
LOCKPORT POOL MAJOR REHABILITATION
STAGE IC, FOREBAY WALL, PHASE I
NEW WORK DETAILS II

Sheet ID
C-503

Z0MVRBD9
8/20/2013
LP26_C-503.dgn

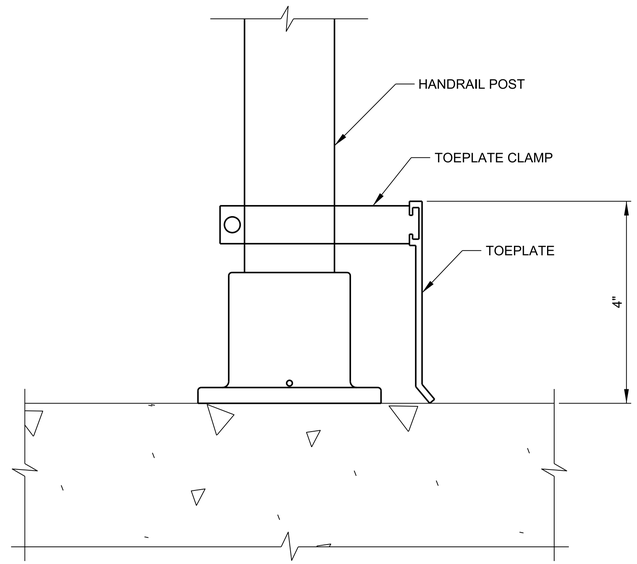

DWG REF(s) : _____

C1 DETAIL
SCALE : 1 1/2"=1'-0"

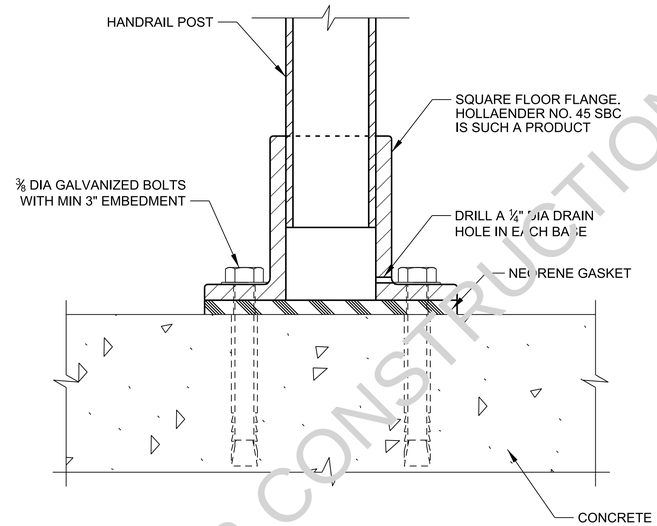

DWG REF(s) : _____

C3 SECTION
SCALE : 1 1/2"=1'-0"

1. CONTRACTOR SHALL SUBMIT HANDRAIL LAYOUT FOR APPROVAL.
2. ALL HANDRAIL PIPE SHALL BE ALUMINUM, MANUFACTURED FROM EITHER ALLOY 6061-T6 OR 6005-T5. POSTS SHALL BE SCHEDULE 80 AND RAILS SHALL BE SCHEDULE 40.
3. ALL HANDRAIL SHALL BE INSTALLED PER MANUFACTURER'S RECOMMENDATIONS.
4. ALL NEW HANDRAIL SHALL BE INSTALLED WITH A NEOPRENE GASKET MATCHING THE FOOTPRINT OF THE BASE PLATE. THE GASKET SHALL BE INSTALLED AS SHOWN.
5. STAINLESS STEEL SET SCREWS SHALL BE USED WITH SLIP-ON CONNECTIONS.
6. PROVIDE TOEPLATE AT ALL LOCATIONS OF NEW HANDRAIL EXCEPT AT OPENINGS. UNLESS NOTED OTHERWISE

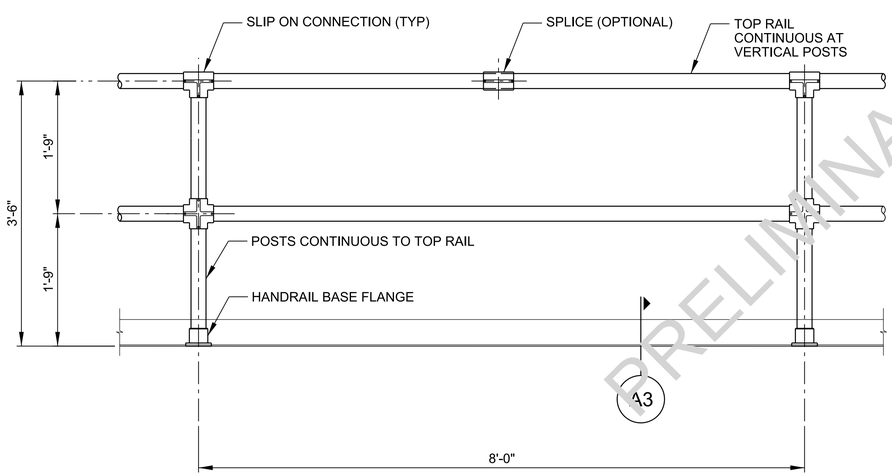

DWG REF(s) : _____

A1 TYPICAL 42" HANDRAIL
SCALE : 1"=1'-0"

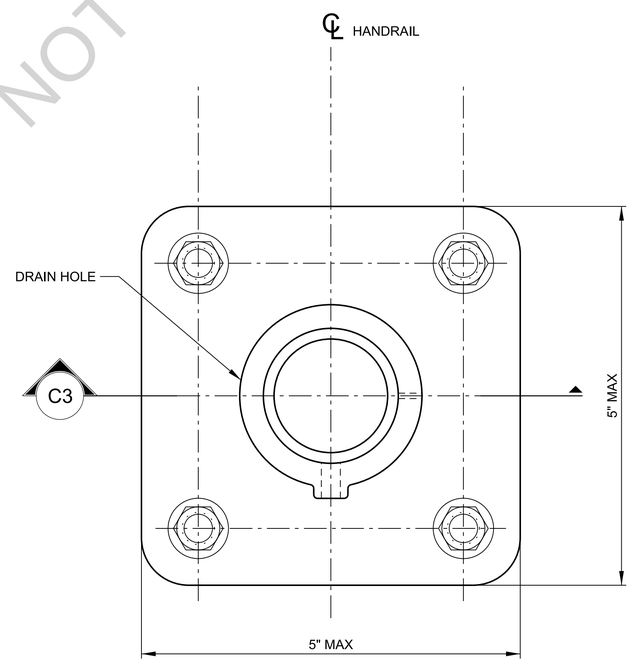

DWG REF(s) : _____

A3 HANDRAIL BASE FLANGE
SCALE : 1"=1"

NOTES

PRELIMINARY - NOT FOR CONSTRUCTION

US Army Corps of Engineers®

MARK	DESCRIPTION	DATE	APPR.

U.S. ARMY CORPS OF ENGINEERS
ROCK ISLAND DISTRICT
ROCK ISLAND, ILLINOIS

DESIGNED BY: JPF/AJG
DWN BY: AER/MAB
CKD BY: CMG
SUBMITTED BY: JAK
PLOT SCALE: AS SHOWN
PLOT DATE:
SIZE: ANSI D
FILE NAME: LP26_C-504.dgn
DATE: 2013/08/16
SOLICITATION NO.: W912EK-13-R-0040
CONTRACT NO.:
PROJECT CODE: LP26

ILLINOIS WATERWAY
LOCKPORT POOL
LOCKPORT, IL
LOCKPORT POOL MAJOR REHABILITATION
STAGE IC, FOREBAY WALL, PHASE I
NEW WORK DETAILS III

Sheet ID
C-504

Z0MVRBD9
8/20/2013
LP26_C-504.dgn

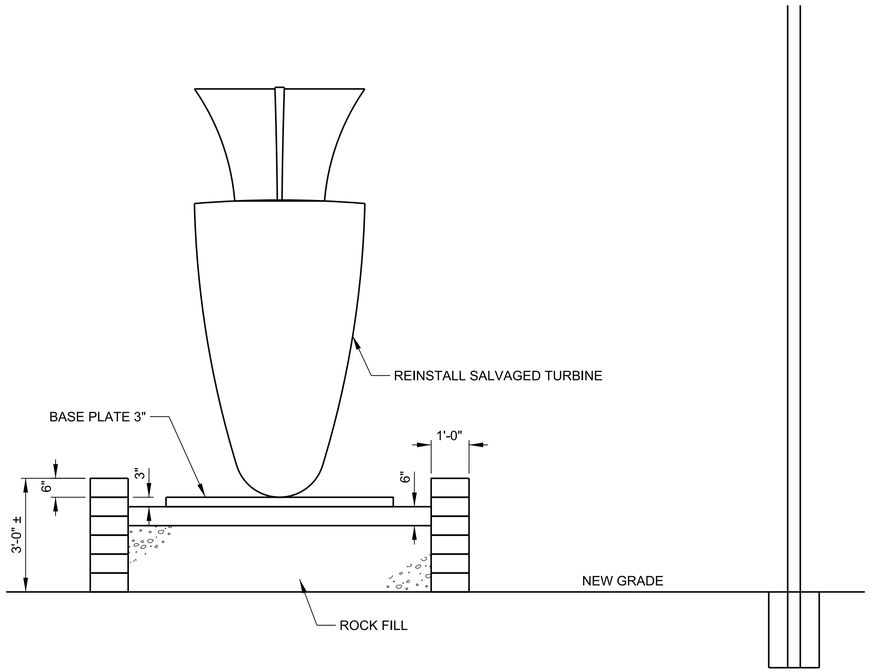

DWG REF(s) : _____

C1 STONE WALL ELEVATION

SCALE : 1/2"=1'-0"

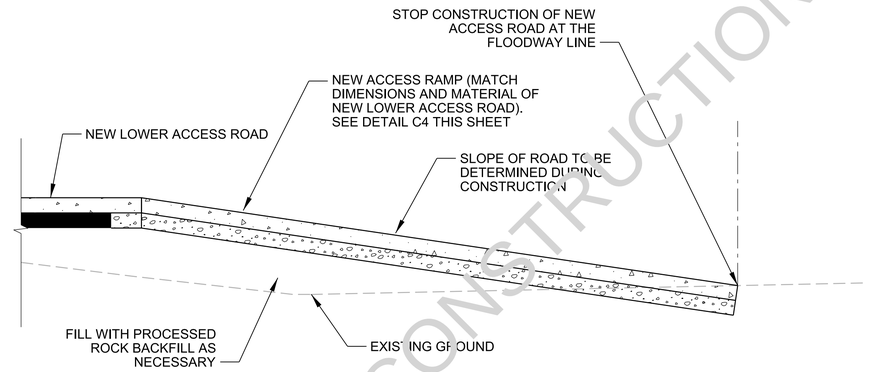

DWG REF(s) : _____

C3 ACCESS RAMP

SCALE : 1"=5'-0"

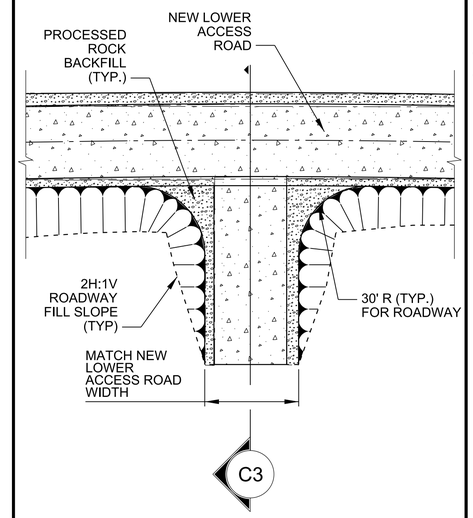

DWG REF(s) : _____

C4 ACCESS RAMP PLAN

SCALE : NO SCALE

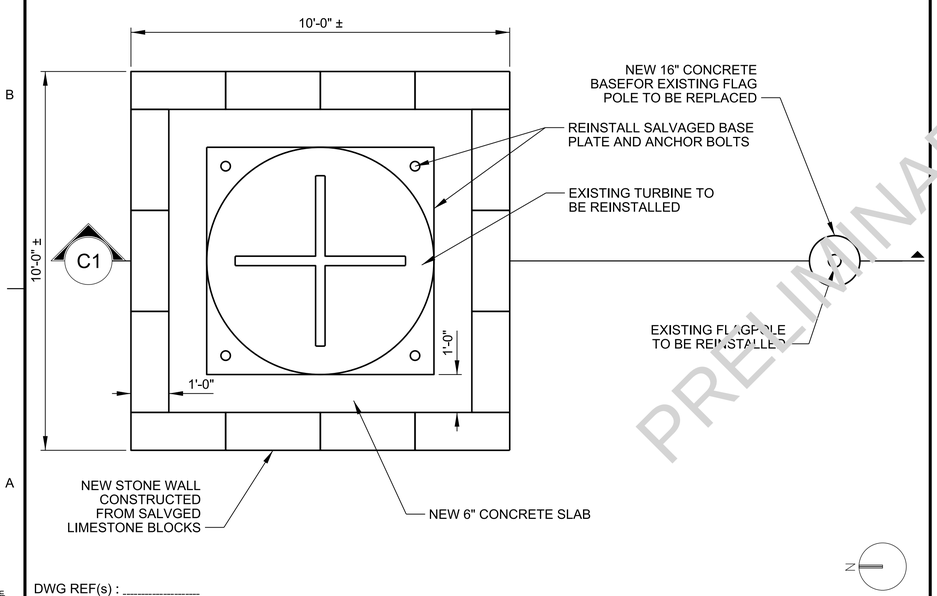

DWG REF(s) : _____

A1 STONE WALL PLAN

SCALE : 1/2"=1'-0"

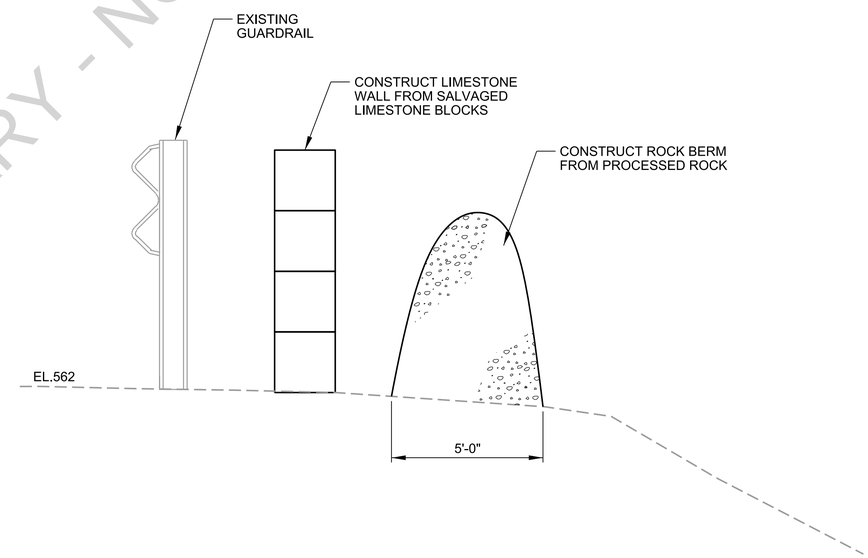

DWG REF(s) : _____

A3 LIMESTONE WALL AND ROCK BERM SECTION

SCALE : NO SCALE

PRELIMINARY - NOT FOR CONSTRUCTION

US Army Corps of Engineers®

MARK	DESCRIPTION	DATE	APPR.

U.S. ARMY CORPS OF ENGINEERS
ROCK ISLAND DISTRICT
ROCK ISLAND, ILLINOIS

DESIGNED BY: JPF/AJG
DWN BY: AER/MAB
CKD BY: CMG
SUBMITTED BY: JAK
PLOT SCALE: AS SHOWN
PLOT DATE:
SIZE: ANSI D
FILE NAME: LP26_C-505.dgn
DATE: 2013/08/16
SOLICITATION NO.: W912EK-13-R-0040
CONTRACT NO.:
PROJECT CODE: LP26

ILLINOIS WATERWAY
LOCKPORT POOL
LOCKPORT, IL
LOCKPORT POOL MAJOR REHABILITATION
STAGE IC, FOREBAY WALL, PHASE I
NEW WORK DETAILS IV

Sheet ID
C-505

Z0MVRBD9
8/20/2013
LP26_C-505.dgn

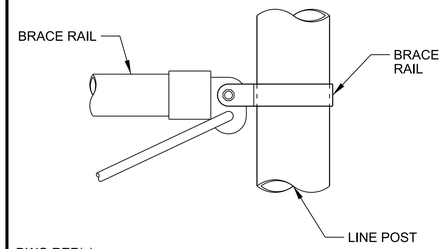

DWG REF(s) : _____

D1 DETAIL
SCALE : NO SCALE

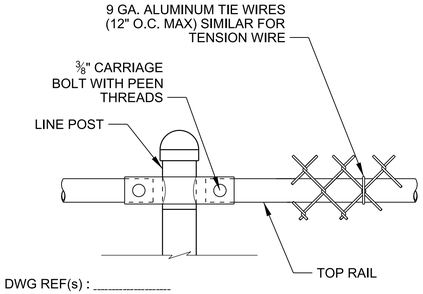

DWG REF(s) : _____

D2 DETAIL
SCALE : NO SCALE

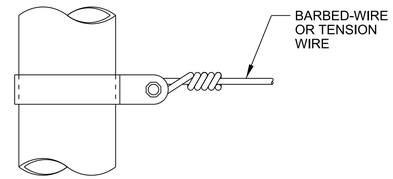

DWG REF(s) : _____

D3 DETAIL
SCALE : NO SCALE

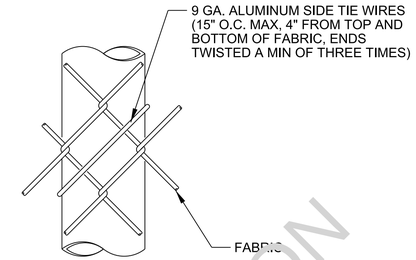

DWG REF(s) : _____

D4 DETAIL
SCALE : NO SCALE

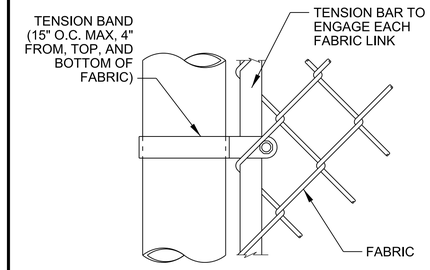

DWG REF(s) : _____

D5 DETAIL
SCALE : NO SCALE

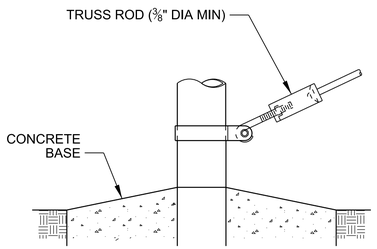

DWG REF(s) : _____

C1 DETAIL
SCALE : NO SCALE

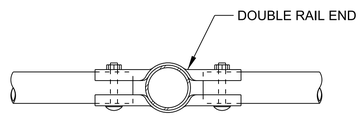

DWG REF(s) : _____

C2 DETAIL
SCALE : NO SCALE

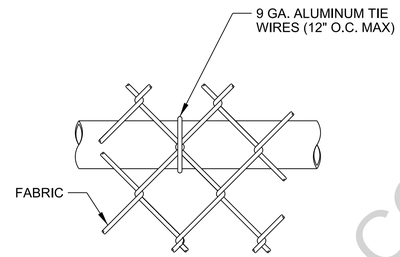

DWG REF(s) : _____

C3 DETAIL
SCALE : NO SCALE

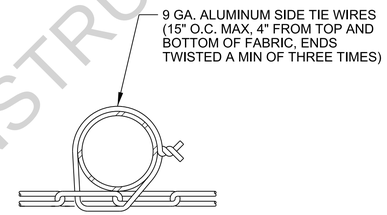

DWG REF(s) : _____

C4 DETAIL
SCALE : NO SCALE

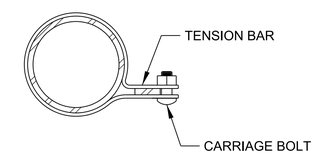

DWG REF(s) : _____

C5 DETAIL
SCALE : NO SCALE

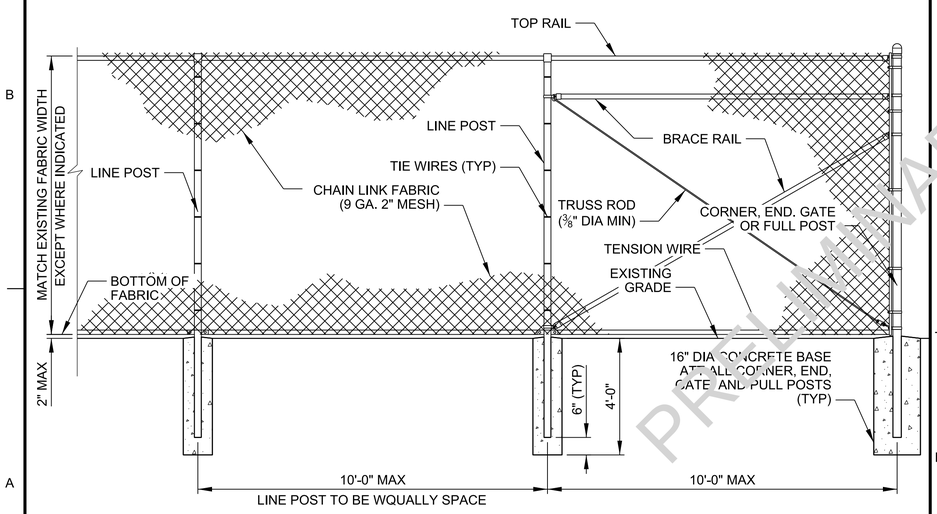

DWG REF(s) : _____

A1 FENCE ELEVATION
SCALE : NO SCALE

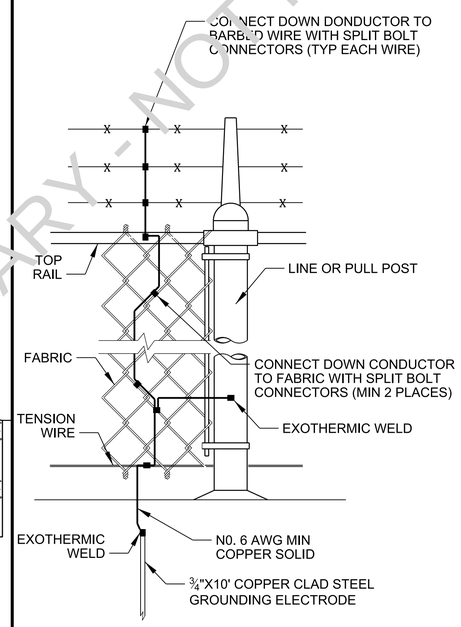

DWG REF(s) : _____

A3 GROUNDING DETAIL
SCALE : NO SCALE

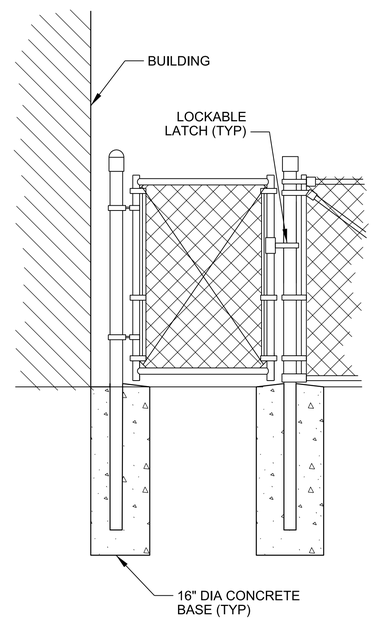

DWG REF(s) : _____

A4 GATE ELEVATION
SCALE : NO SCALE

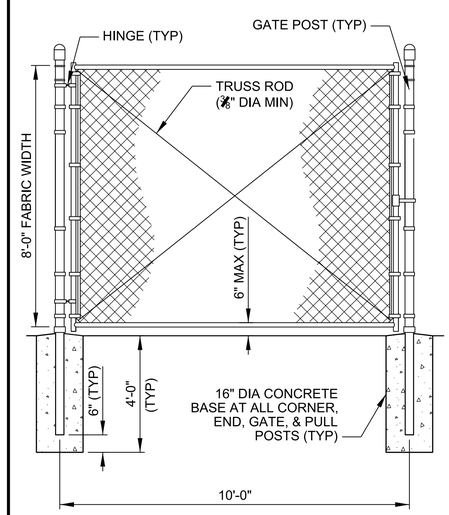

DWG REF(s) : _____

A5 GATE ELEVATION
SCALE : NO SCALE

PRELIMINARY - NOT FOR CONSTRUCTION

US Army Corps of Engineers®

MARK	DESCRIPTION	DATE	APPR.

U.S. ARMY CORPS OF ENGINEERS
ROCK ISLAND DISTRICT
ROCK ISLAND, ILLINOIS

DESIGNED BY: JPF/AJG | DATE: 20130/08/16
DWN BY: AER/MAB | CKD BY: CMG | SOLICITATION NO.: W912EK-13-R-0040
SUBMITTED BY: JAK | CONTRACT NO.:
PLOT SCALE: AS SHOWN | PLOT DATE: | PROJECT CODE: LP26
SIZE: ANSI D | FILE NAME: LP26_C-506.dgn

ILLINOIS WATERWAY
LOCKPORT POOL
LOCKPORT, IL
LOCKPORT POOL MAJOR REHABILITATION
STAGE IC, FOREBAY WALL, PHASE I
NEW FENCE AND GATE DETAILS

Sheet ID
C-506

20MVR8D9
20130816
LP26_C-506.dgn

PHOTO 1

VIEW OF EXISTING UPPER/LOWER ACCESS ROADS TRANSITION
LOOKING UPSTREAM FROM STA. 48+00A +/-

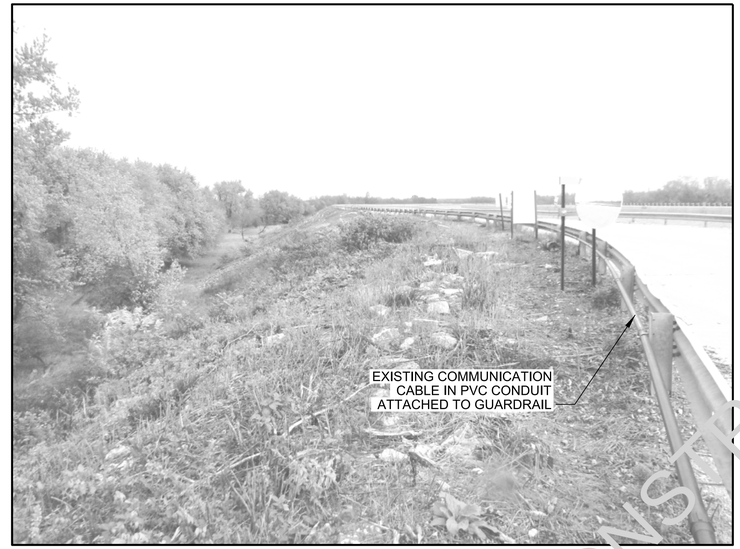

PHOTO 2

VIEW OF EXISTING WESTERLY EMBANKMENT SLOPE
LOOKING UPSTREAM FROM STA. 47+50A +/-

PHOTO 3

VIEW OF EXISTING UPPER/LOWER ACCESS ROADS TRANSITION
LOOKING DOWNSTREAM FROM STA. 47+50A +/-

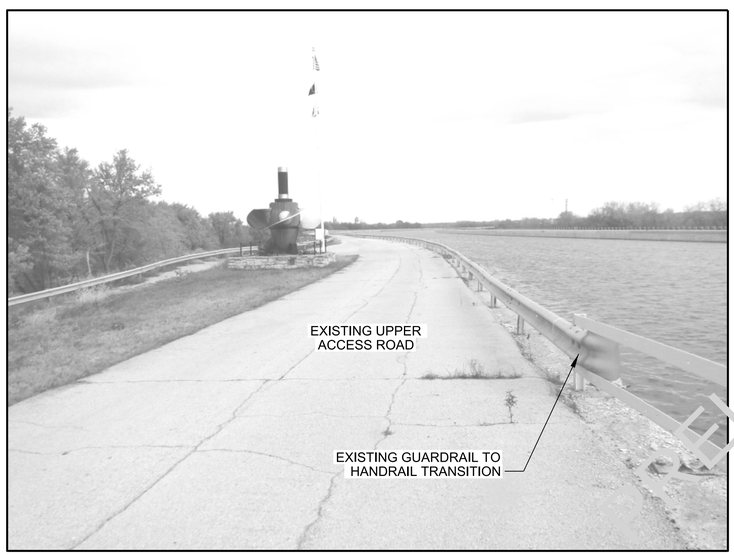

PHOTO 4

VIEW OF EXISTING UPPER ACCESS ROAD AND CANAL WALL
LOOKING UPSTREAM FROM STA. 50+00A +/-

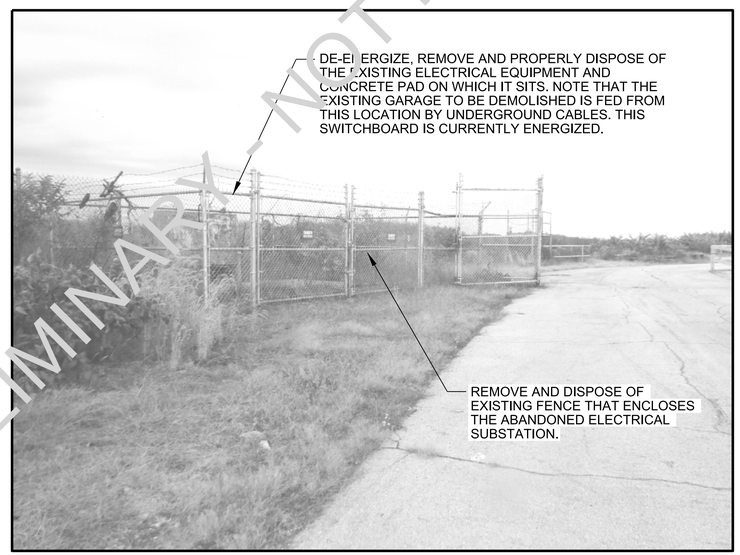

PHOTO 5

VIEW OF ABANDONED SUB-STATION
LOOKING UPSTREAM FROM STA. 58+50A +/-

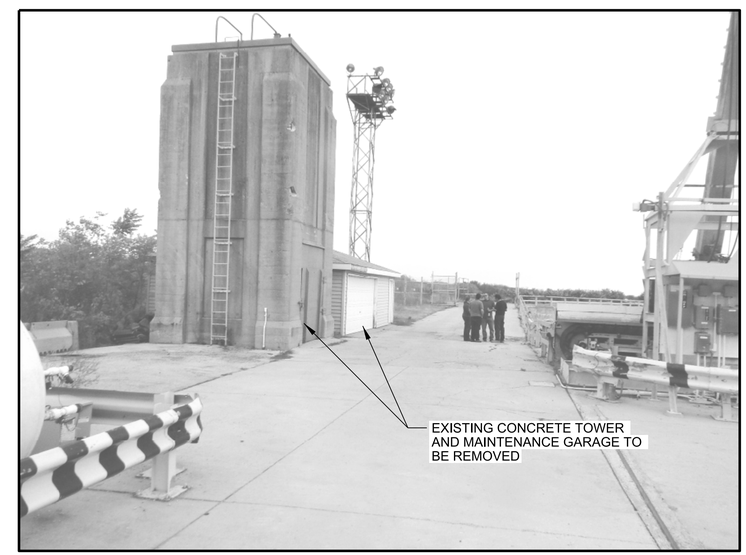

PHOTO 6

VIEW OF EXISTING CINDER TOWER AND MAINTENANCE GARAGE
LOOKING UPSTREAM FROM STA. 59+50A+/-

PRELIMINARY - NOT FOR CONSTRUCTION

DWG REF(s) :

A1 EXISTING PROJECT SITE PHOTOS

US Army Corps of Engineers®

MARK	DESCRIPTION	DATE	APPR.

U.S. ARMY CORPS OF ENGINEERS
ROCK ISLAND DISTRICT
ROCK ISLAND, ILLINOIS

DESIGNED BY: JPF/AJG
DWN BY: AER
CKD BY: CMG
SUBMITTED BY: JAK
PLOT SCALE: AS SHOWN
PLOT DATE:
SIZE: ANSI D
FILE NAME: LP26_C-901.dgn
DATE: 2013/08/16
SOLICITATION NO.: W912EK-13-R-0040
CONTRACT NO.:
PROJECT CODE: LP26

ILLINOIS WATERWAY
LOCKPORT POOL
LOCKPORT, IL
LOCKPORT POOL MAJOR REHABILITATION
STAGE IC, FOREBAY WALL, PHASE I
EXISTING PROJECT SITE
PHOTOS I

Sheet ID
C-901

20MVRB09
8/20/2013
LP26_C-901.dgn

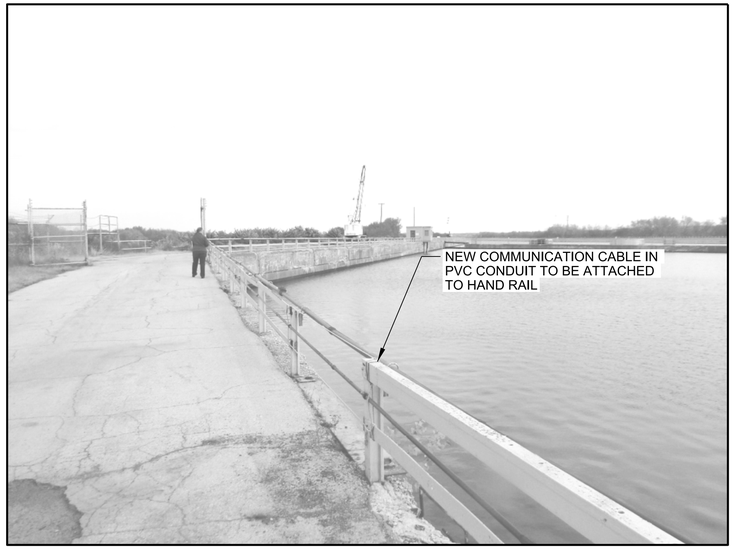

PHOTO 7

VIEW OF EXISTING UPPER ACCESS ROAD AND CANAL WALL
LOOKING UPSTREAM FROM STA. 59+00 +/-

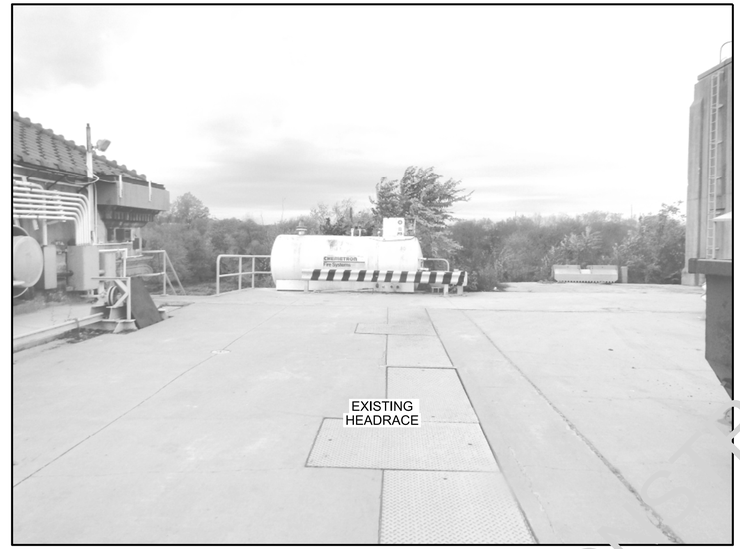

PHOTO 8

VIEW OF WESTERLY SIDE OF EXISTING POWERHOUSE RACEWAY
LOOKING WESTERLY FROM STA. 59+00 +/-

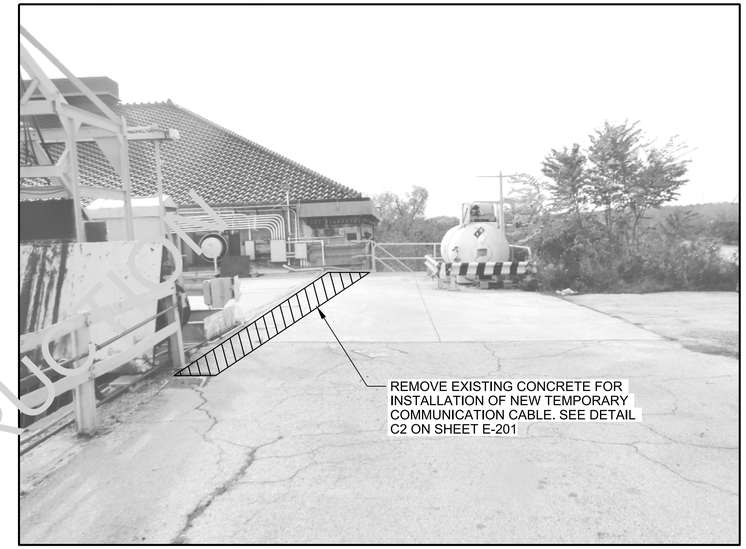

PHOTO 9

VIEW OF WEST SIDE OF POWERHOUSE AND RACEWAY
LOOKING DOWNSTREAM FROM STA. 59+00 +/-

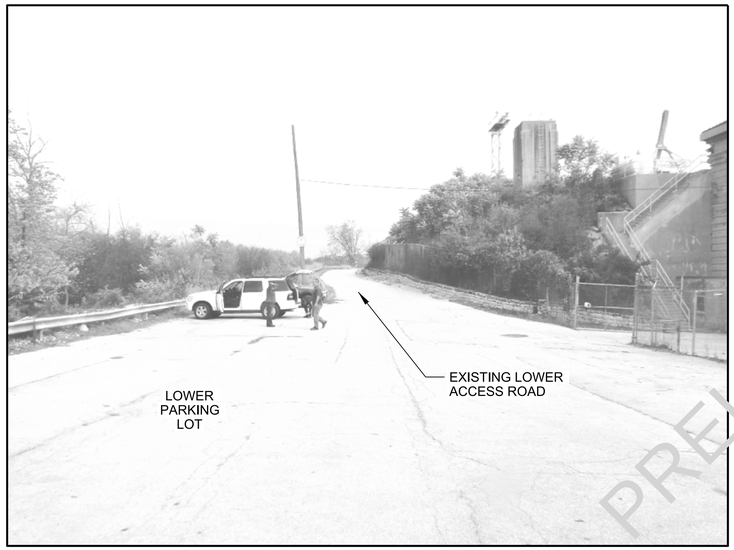

PHOTO 10

VIEW OF EXISTING LOWER ACCESS ROAD AND PARKING LOT
LOOKING UPSTREAM (NORTH) FROM STA. 60+00 +/-

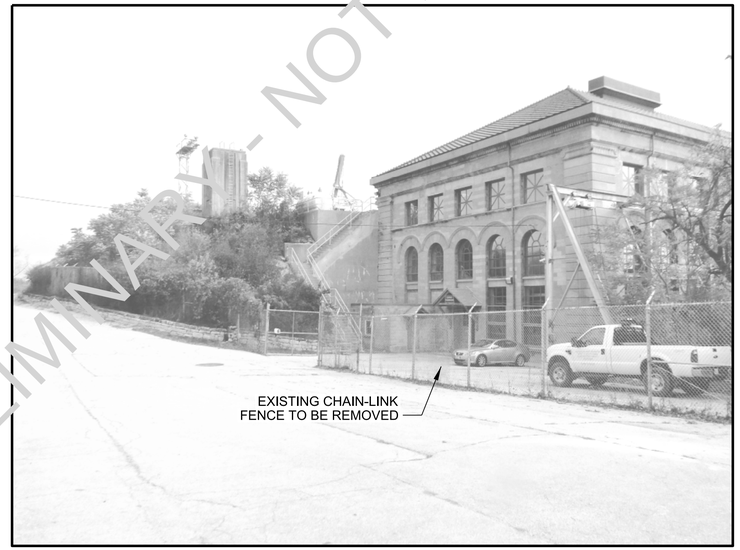

PHOTO 11

VIEW OF EXISTING WEST SIDE OF POWERHOUSE
LOOKING UPSTREAM (NORTH EASTERLY) FROM STA. 60+00 +/-

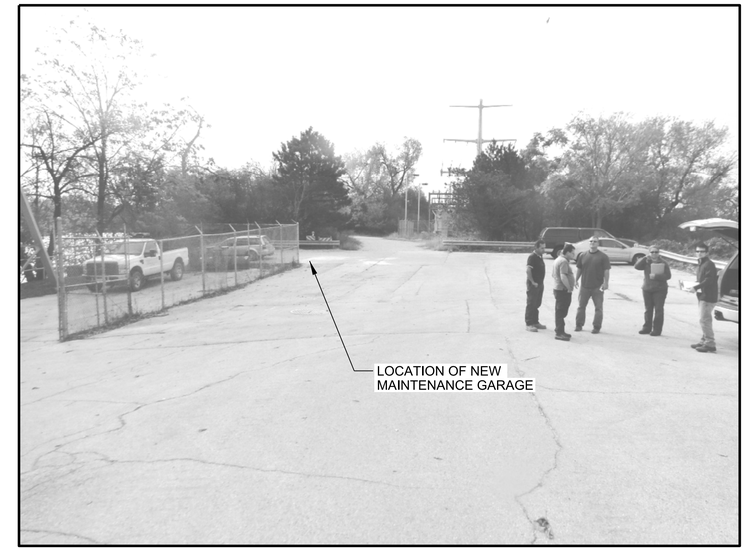

PHOTO 12

VIEW OF EXISTING LOWER PARKING LOT
LOOKING DOWNSTREAM (SOUTH) FROM STA. 60+00 +/-

PRELIMINARY - NOT FOR CONSTRUCTION

DWG REF(s) :

A1 EXISTING PROJECT SITE PHOTOS

US Army Corps of Engineers®

MARK	DESCRIPTION	DATE	APPR.

U.S. ARMY CORPS OF ENGINEERS
ROCK ISLAND DISTRICT
ROCK ISLAND, ILLINOIS

DESIGNED BY: JPF/AJG
DWN BY: AER
CKD BY: CMG
SUBMITTED BY: JAK
PLOT SCALE: AS SHOWN
PLOT DATE:
SIZE: ANSI D
FILE NAME: LP26_C-902.dgn
DATE: 2013/08/16
SOLICITATION NO.: W912EK-13-R-0040
CONTRACT NO.:
PROJECT CODE: LP26

ILLINOIS WATERWAY
LOCKPORT POOL
LOCKPORT, IL
LOCKPORT POOL MAJOR REHABILITATION
STAGE IC, FOREBAY WALL, PHASE I
EXISTING PROJECT SITE
PHOTOS II

Sheet ID
C-902

Z0MVRBD9
8/20/2013
LP26_C-902.dgn

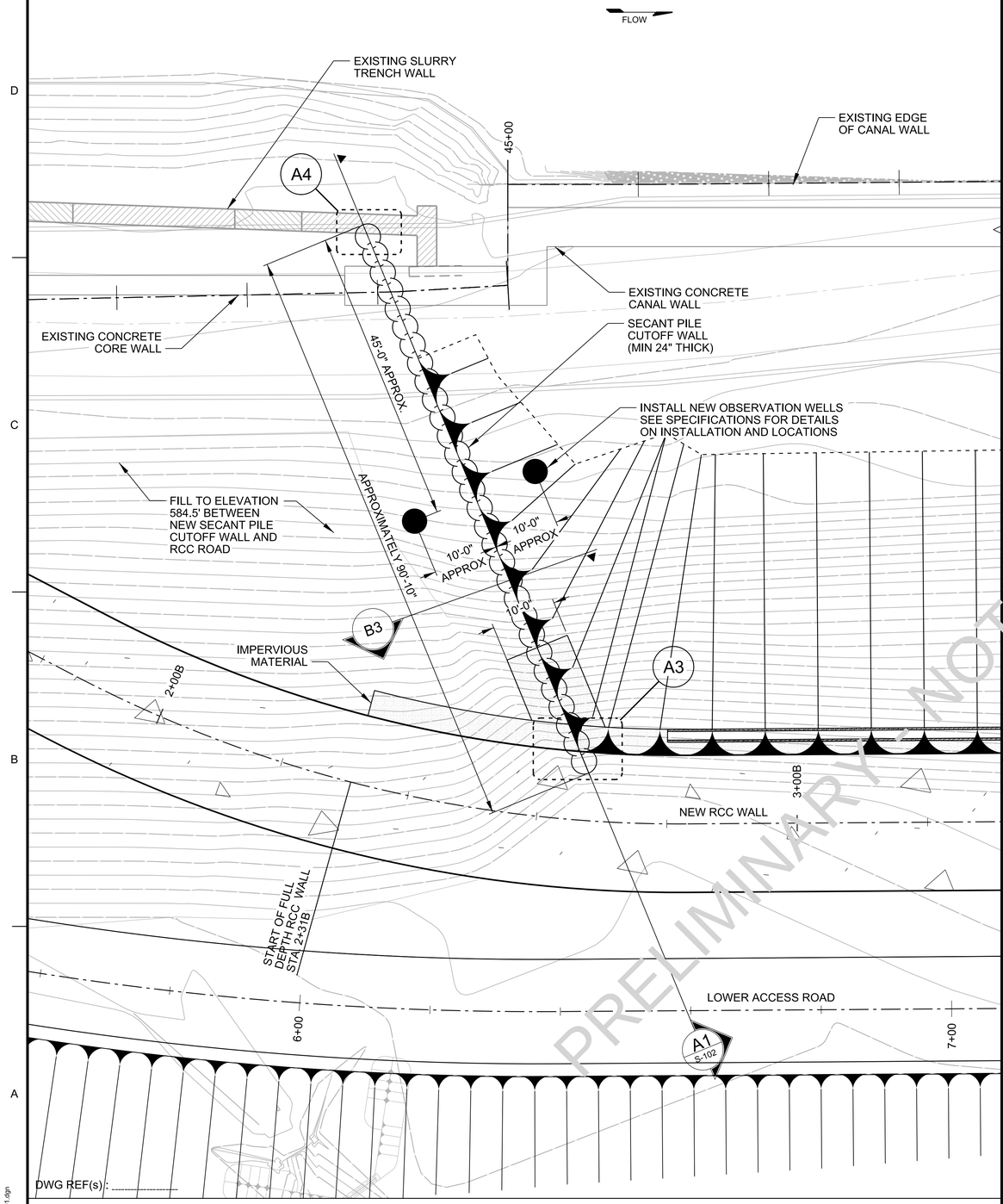

DWG REF(s) : _____

A1 PLAN
SCALE : 1"=10'-0"
0 10' 20'

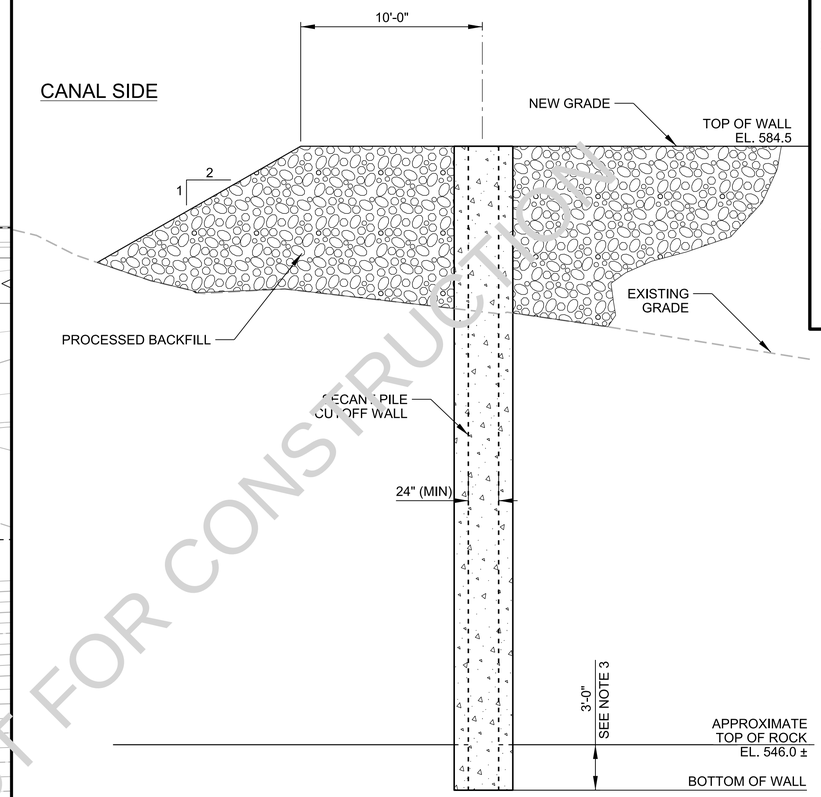

DWG REF(s) : _____

B3 SECTION
SCALE : 1"=5'-0"
0 5' 10'

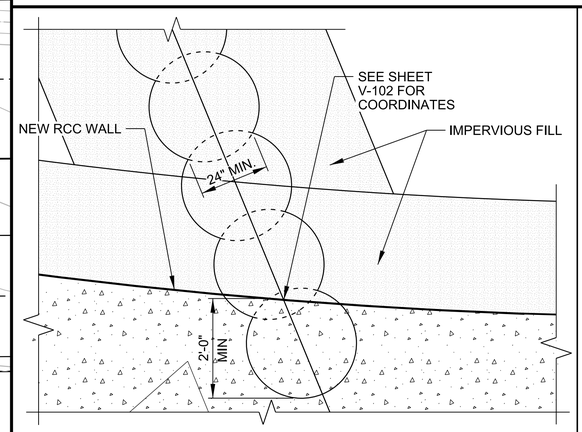

DWG REF(s) : _____

A3 DETAIL
SCALE : 3/8"=1'-0"
0 2' 4' 6'

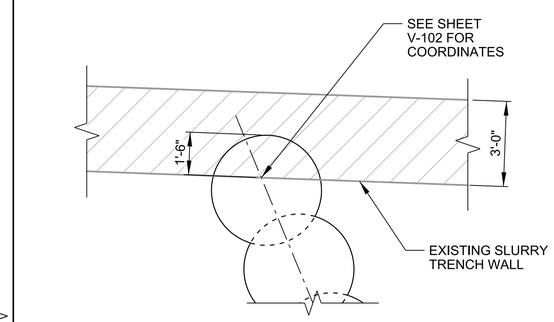

DWG REF(s) : _____

A4 DETAIL
SCALE : 3/8"=1'-0"
0 2' 4' 6'

GENERAL SHEET NOTES

1. SEE REFERENCE DRAWINGS FOR DIMENSIONS AND LOCATION OF EXISTING FEATURES.
2. THE CONTRACTOR SHALL VERIFY THE DIMENSIONS AND LOCATION OF THE EXISTING CONCRETE CANAL WALL AND SLURRY TRENCH WALL PRIOR TO PROCEEDING WITH WORK. THE SLURRY TRENCH WALL HAS CONCRETE GUIDE WALLS ON BOTH SIDES THAT WERE CONSTRUCTED AS PART OF PLACEMENT OF THE FULL DEPTH TRENCH WALL. THE CONTRACTOR SHALL NOTIFY THE CONTRACTING OFFICER IF ANY DISCREPANCIES EXIST PRIOR TO PROCEEDING WITH CONSTRUCTION.
3. THE APPROXIMATE TOP OF BEDROCK HAS BEEN INTERPRETED FROM BORINGS. THE ACTUAL ELEVATION OF THE ROCK CAN BE EXPECTED TO VARY FROM THE ELEVATION SHOWN. THE PILES SHOWN ON THIS SHEET SHALL BE DRILLED 3' BELOW THE ACTUAL BEDROCK ELEVATION.

PRELIMINARY - NOT FOR CONSTRUCTION

US Army Corps of Engineers®

MARK	DESCRIPTION	DATE	APPR.

DESIGNED BY: BTJ
DWN BY: AER
CKD BY: CDD
SUBMITTED BY: FRJ
PLOT SCALE: AS SHOWN
PLOT DATE:
SIZE: ANSI D
FILE NAME: LP26_S-101.dgn
DATE: 2013/08/16
SOLICITATION NO.: W912EK-13-R-0040
CONTRACT NO.:
PROJECT CODE: LP26

U.S. ARMY CORPS OF ENGINEERS
ROCK ISLAND DISTRICT
ROCK ISLAND, ILLINOIS

ILLINOIS WATERWAY
LOCKPORT POOL
LOCKPORT, IL
LOCKPORT POOL MAJOR REHABILITATION
STAGE IC, FOREBAY WALL, PHASE I
NEW SECANT PILE CUTOFF WALL
UPSTREAM PLAN AND DETAILS

Sheet ID
S-101

20MVRBD9
8/20/2013
LP26_S-101.dgn

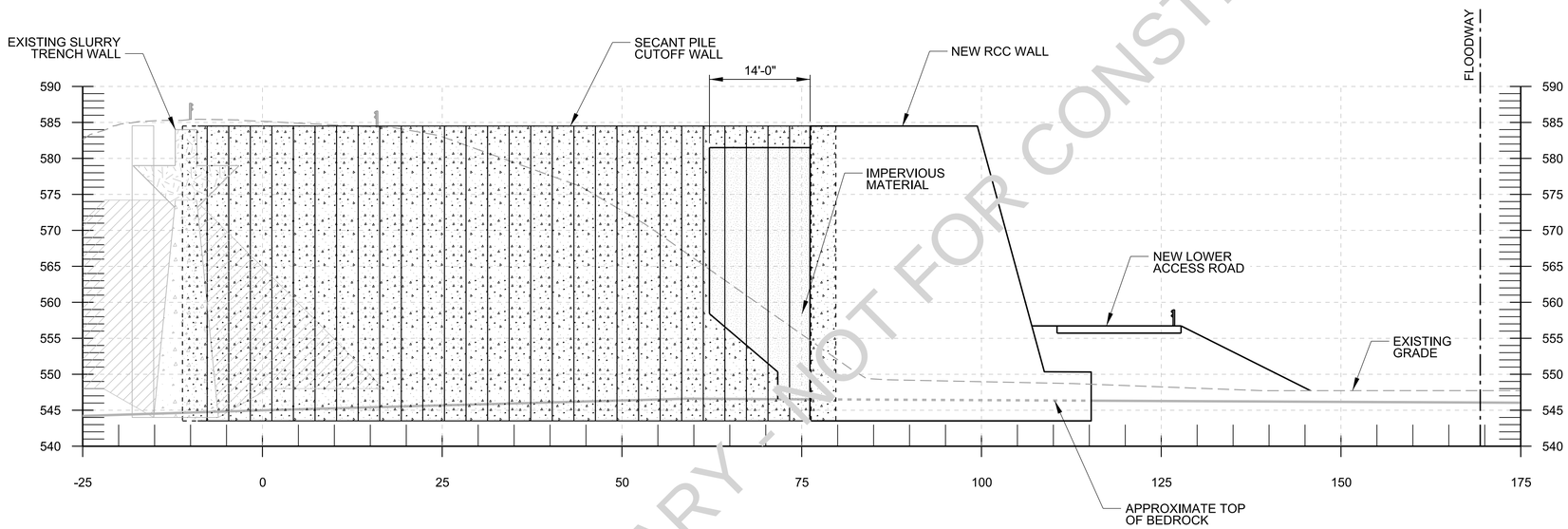

PRELIMINARY - NOT FOR CONSTRUCTION

DWG REF(s) : S-101

A1 NEW SECANT PILE CUTTOFF WALL SECTION

SCALE : 1"=10'-0"

0 10' 20'

US Army Corps of Engineers®

MARK	DESCRIPTION	DATE	APPR.

U.S. ARMY CORPS OF ENGINEERS
ROCK ISLAND DISTRICT
ROCK ISLAND, ILLINOIS

DESIGNED BY: BTJ
DWN BY: AER
CKD BY: CDD
SUBMITTED BY: FRJ
PLOT SCALE: AS SHOWN
PLOT DATE:
SIZE: ANSI D
FILE NAME: LP26_S-102.dgn
DATE: 2013/08/16
SOLICITATION NO.: W912EK-13-R-0040
CONTRACT NO.:
PROJECT CODE: LP26

ILLINOIS WATERWAY
LOCKPORT POOL
LOCKPORT, IL
LOCKPORT POOL MAJOR REHABILITATION
STAGE IC: FOREBAY WALL, PHASE I
NEW SECANT PILE CUTOFF WALL
UPSTREAM SECTION

Sheet ID
S-102

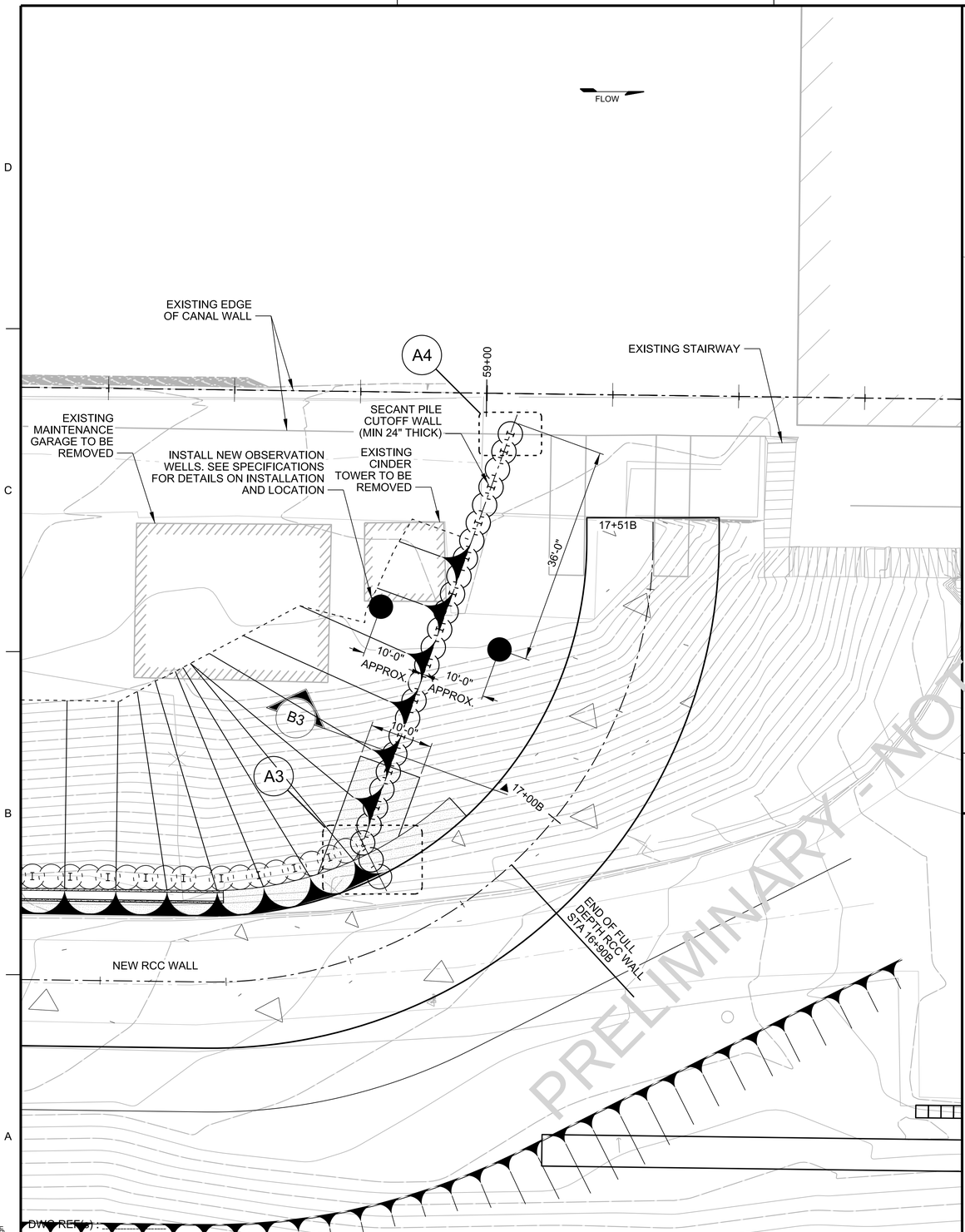

A1 PLAN
SCALE : 1"=10'-0"
0 10' 20'

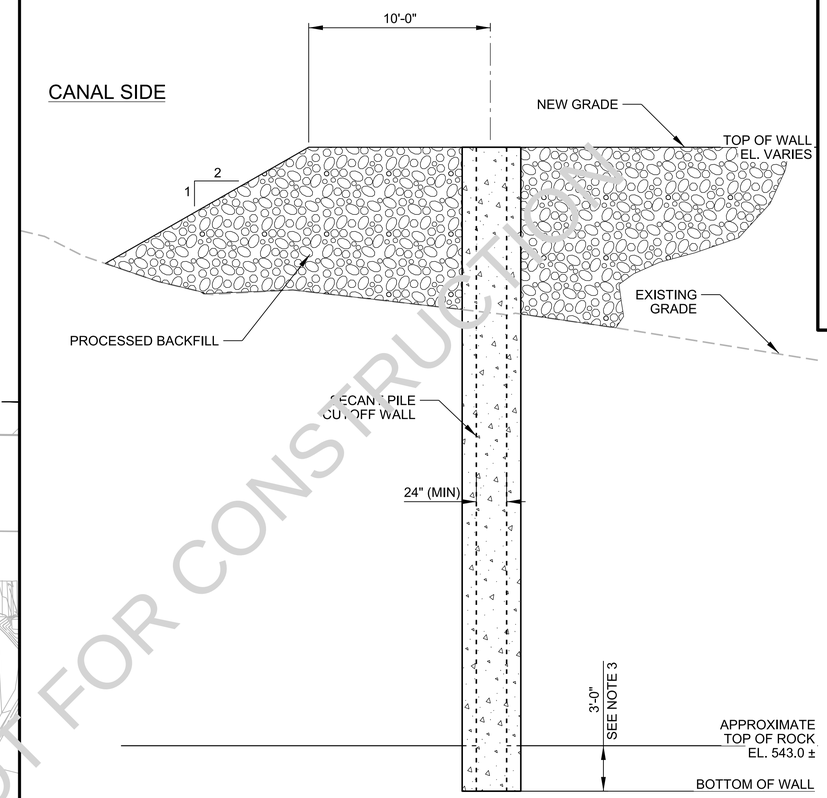

B3 SECTION
SCALE : 1"=5'-0"
0 5' 10'

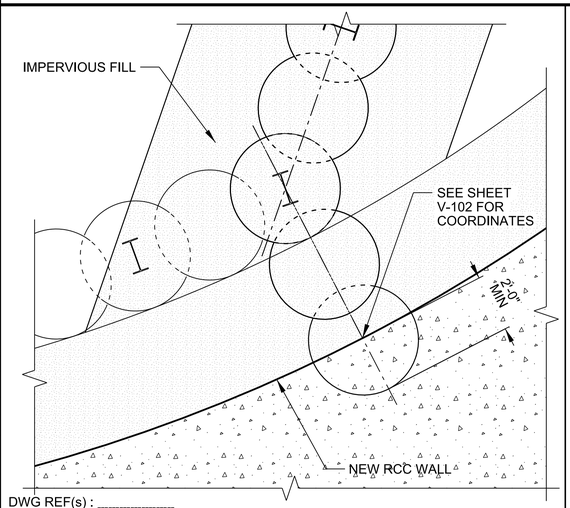

A3 DETAIL
SCALE : 3/8"=1'-0"
0 2' 4' 6'

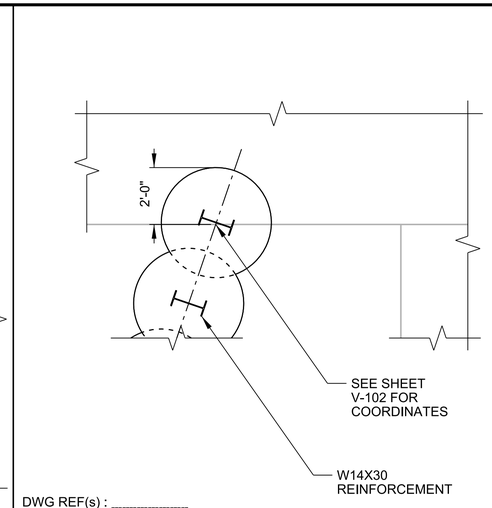

A4 DETAIL
SCALE : 3/8"=1'-0"
0 2' 4' 6'

GENERAL SHEET NOTES

1. SEE REFERENCE DRAWINGS FOR DIMENSIONS AND LOCATION OF EXISTING FEATURES.
2. THE CONTRACTOR SHALL VERIFY THE DIMENSIONS AND LOCATION OF THE EXISTING CONCRETE CANAL WALL AND SLURRY TRENCH WALL PRIOR TO PROCEEDING WITH WORK. THE SLURRY TRENCH WALL HAS CONCRETE GUIDE WALLS ON BOTH SIDES THAT WERE CONSTRUCTED AS PART OF PLACEMENT OF THE FULL DEPTH TRENCH WALL. THE CONTRACTOR SHALL NOTIFY THE CONTRACTING OFFICER IF ANY DISCREPANCIES EXIST PRIOR TO PROCEEDING WITH CONSTRUCTION.
3. THE APPROXIMATE TOP OF BEDROCK HAS BEEN INTERPRETED FROM BORINGS. THE ACTUAL ELEVATION OF THE ROCK CAN BE EXPECTED TO VARY FROM THE ELEVATION SHOWN. THE PILES SHOWN ON THIS SHEET SHALL BE DRILLED 3' BELOW THE ACTUAL BEDROCK ELEVATION.

PRELIMINARY - NOT FOR CONSTRUCTION

US Army Corps of Engineers®

MARK	DESCRIPTION	DATE	APPR.

U.S. ARMY CORPS OF ENGINEERS
ROCK ISLAND DISTRICT
ROCK ISLAND, ILLINOIS

DESIGNED BY: BTJ
DWN BY: AER
CKD BY: CDD
SUBMITTED BY: FRJ
PLOT SCALE: AS SHOWN
PLOT DATE:
SIZE: ANSI D
FILE NAME: LP26_S-103.dgn
DATE: 2013/08/16
SOLICITATION NO.: W912EK-13-R-0040
CONTRACT NO.:
PROJECT CODE: LP26

ILLINOIS WATERWAY
LOCKPORT POOL
LOCKPORT, IL
LOCKPORT POOL MAJOR REHABILITATION
STAGE IC: FOREBAY WALL PHASE I
NEW SECANT PILE CUTOFF WALL
DOWNSTREAM PLAN AND DETAILS

Sheet ID
S-103

Z:\MVR\B29\
60600001\
LP26_S-103.dgn

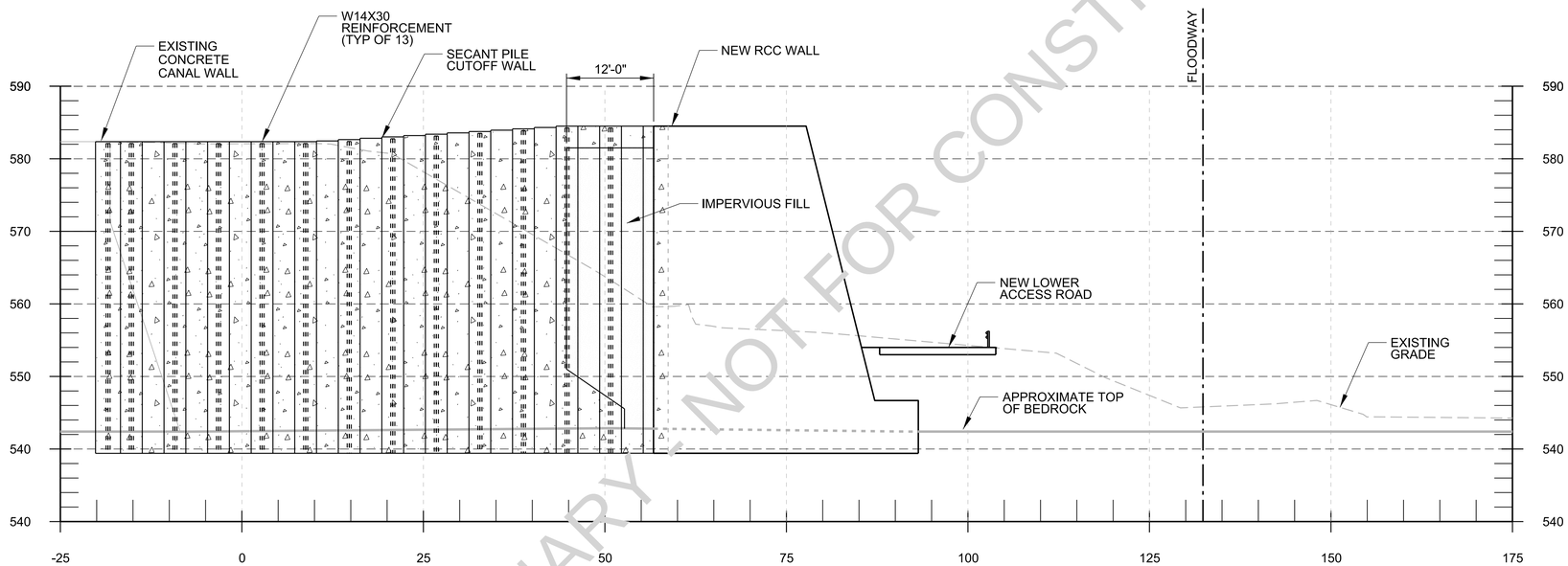

PRELIMINARY - NOT FOR CONSTRUCTION

DWG REF(s) : S-101

A1 NEW SECANT PILE CUTTOFF WALL SECTION

SCALE : 1"=10'-0"

0 10' 20'

US Army Corps of Engineers®

MARK	DESCRIPTION	DATE	APPR.

U.S. ARMY CORPS OF ENGINEERS
ROCK ISLAND DISTRICT
ROCK ISLAND, ILLINOIS

DESIGNED BY: BTJ
DWN BY: AER
CKD BY: CDD
SUBMITTED BY: FRJ
PLOT SCALE: AS SHOWN
PLOT DATE:
SIZE: ANSI D
FILE NAME: LP29_S-104.dgn
PROJECT CODE: LP29
SOLICITATION NO.: W912EK-13-R-0040
CONTRACT NO.:
DATE: 2013/08/16

ILLINOIS WATERWAY
LOCKPORT POOL
LOCKPORT, IL
LOCKPORT POOL MAJOR REHABILITATION
STAGE IC, FOREBAY WALL, PHASE I
NEW SECANT PILE CUTOFF WALL
DOWNSTREAM SECTION

Sheet ID
S-104

GENERAL NOTES

1. THE SECANT PILE SHORING WALL, AS SHOWN, IS CONSIDERED AN ACCEPTABLE METHOD TO PROVIDE THE NECESSARY TEMPORARY SHORING. THE CONTRACTOR MAY SUBMIT AN ALTERNATE SHORING PLAN. ANY PROPOSED PLAN MUST ADEQUATELY RETAIN THE EXISTING EMBANKMENT, AS DEMONSTRATED BY CALCULATIONS STAMPED BY A LICENSED STRUCTURAL ENGINEER, AND PROVIDE DRAINAGE TO THE EMBANKMENT.
2. THE APPROXIMATE TOP OF BEDROCK HAS BEEN INTERPRETED FROM BORINGS. THE ACTUAL ELEVATION OF THE ROCK CAN BE EXPECTED TO VARY FROM THE ELEVATION SHOWN. THE SECONDARY SECANT PILES SHOWN ON THIS SHEET SHALL BE DRILLED THE REQUIRED DISTANCE BELOW THE ACTUAL BEDROCK ELEVATION.
3. THE SHORING WALL ALIGNMENT IS REFERENCED TO THE RCC WALL ALIGNMENT FOR LAYOUT PURPOSES.
4. THE SHORING WALL CENTERLINE IS 15.94' FROM THE RCC WALL CENTERLINE.

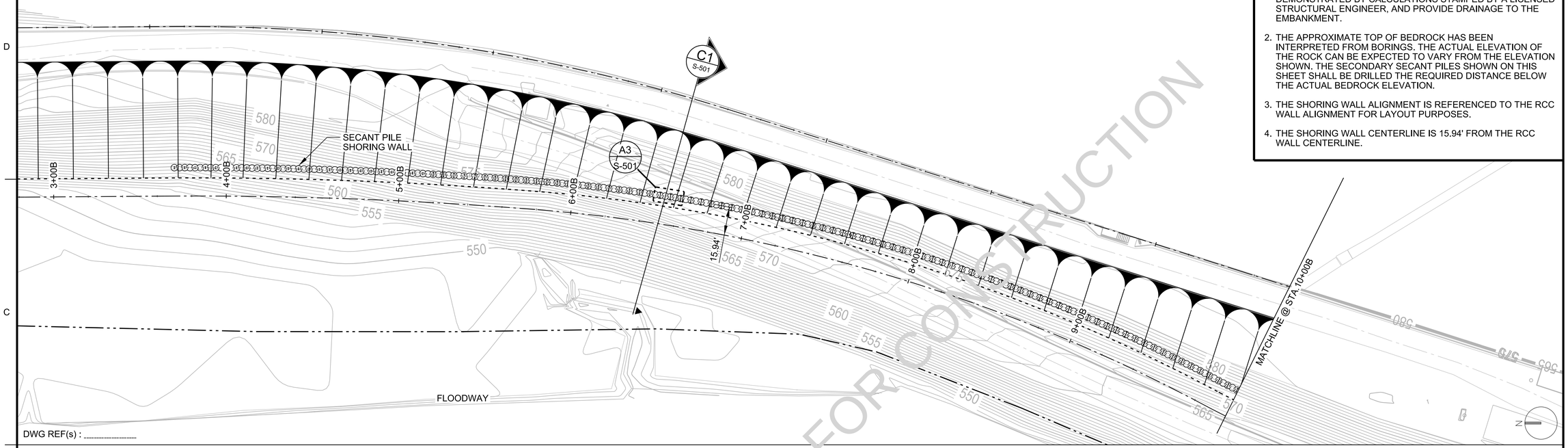

DWG REF(s) : _____

C1 NEW SECANT PILE SHORING WALL PLAN

SCALE : 1"=30'-0" 0 30' 60'

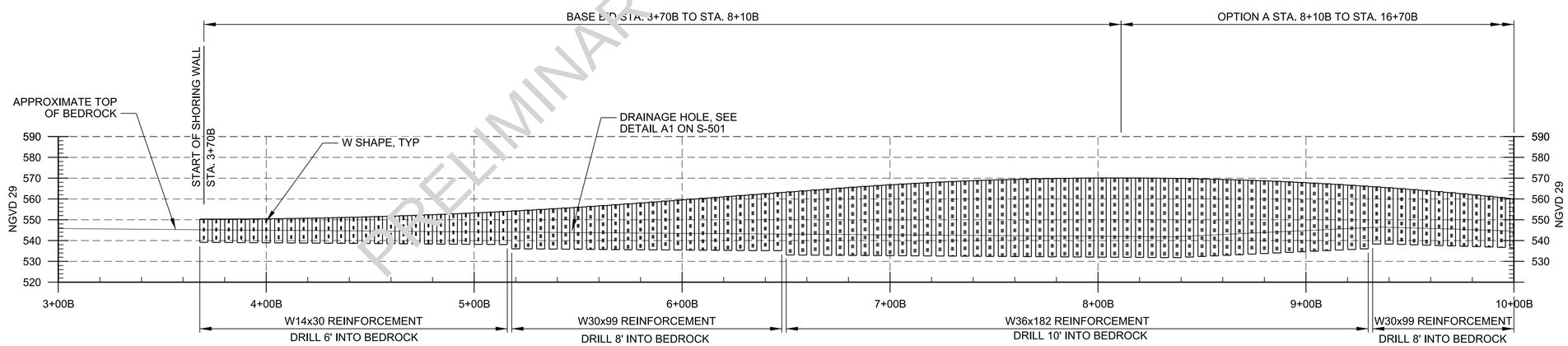

DWG REF(s) : _____

A3 NEW SECANT PILE SHORING WALL PROFILE

SCALE : 1"=30'-0" 0 30' 60'

PRELIMINARY - NOT FOR CONSTRUCTION

US Army Corps of Engineers®

MARK	DESCRIPTION	DATE	APPR.

U.S. ARMY CORPS OF ENGINEERS
ROCK ISLAND DISTRICT
ROCK ISLAND, ILLINOIS

DESIGNED BY: BTJ
DWN BY: AER
CKD BY: CDD
SUBMITTED BY: FRJ
PLOT SCALE: As shown
PLOT DATE:
SIZE: ANSI D
FILE NAME: LP26_S-105.dgn
DATE: 2013/08/16
SOLICITATION NO.: W912EK-13-R-0040
CONTRACT NO.:
PROJECT CODE: LP26

ILLINOIS WATERWAY
LOCKPORT POOL
LOCKPORT, IL
LOCKPORT POOL MAJOR REHABILITATION
STAGE IC, FOREBAY WALL, PHASE I
NEW SECANT PILE SHORING WALL
PLAN AND PROFILE I

Sheet ID
S-105

Z:\DAVIDEB\9\
2013/08/16
LP26_S-105.dgn

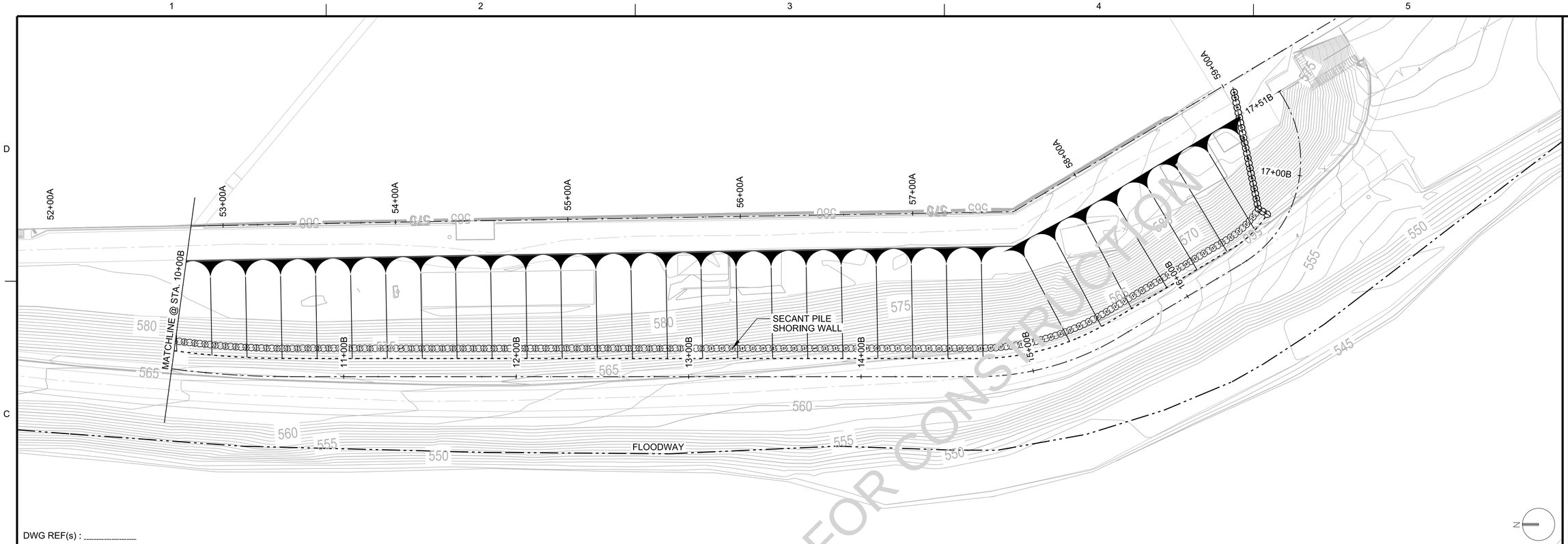

DWG REF(s) : _____

C1 NEW SECANT PILE SHORING WALL PLAN

SCALE : 1"=30'-0"

0 30' 60'

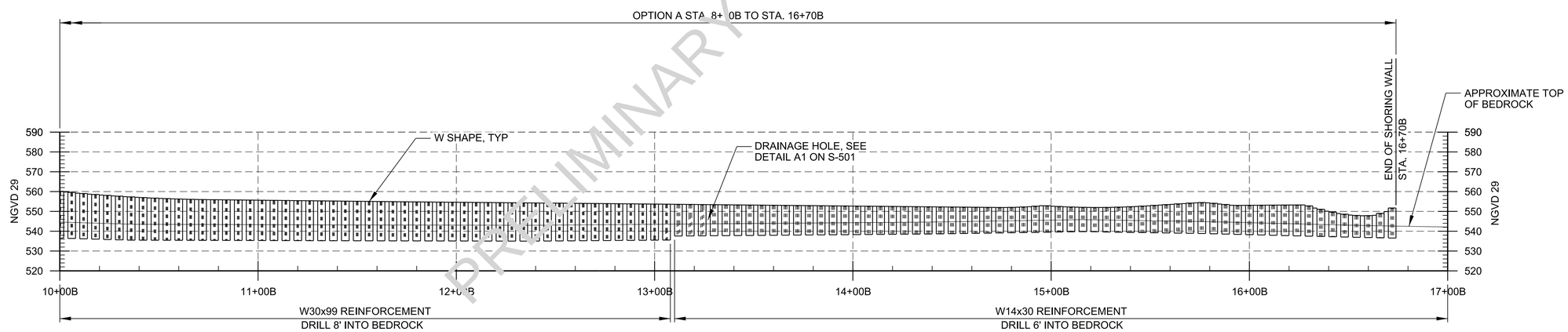

DWG REF(s) : _____

A3 NEW SECANT PILE SHORING WALL PROFILE

SCALE : 1"=30'-0"

0 30' 60'

PRELIMINARY - NOT FOR CONSTRUCTION

US Army Corps of Engineers®

MARK	DESCRIPTION	DATE	APPR.

DESIGNED BY: BTJ
DWN BY: AER
CKD BY: CDD
SUBMITTED BY: FRJ
PLOT SCALE: AS SHOWN
PLOT DATE:
SIZE: ANSI D
FILE NAME: LP26_S-106.dgn
DATE: 2013/08/16
SOLICITATION NO.: W912EK-13-R-0040
CONTRACT NO.:
PROJECT CODE: LP26

U.S. ARMY CORPS OF ENGINEERS
ROCK ISLAND DISTRICT
ROCK ISLAND, ILLINOIS

ILLINOIS WATERWAY
LOCKPORT POOL
LOCKPORT, IL
LOCKPORT POOL MAJOR REHABILITATION
STAGE IC, FOREBAY WALL, PHASE I
NEW SECANT PILE SHORING WALL
PLAN AND PROFILE II

Sheet ID
S-106

Z0MVRB09
8/20/2013
LP26_S-106.dgn

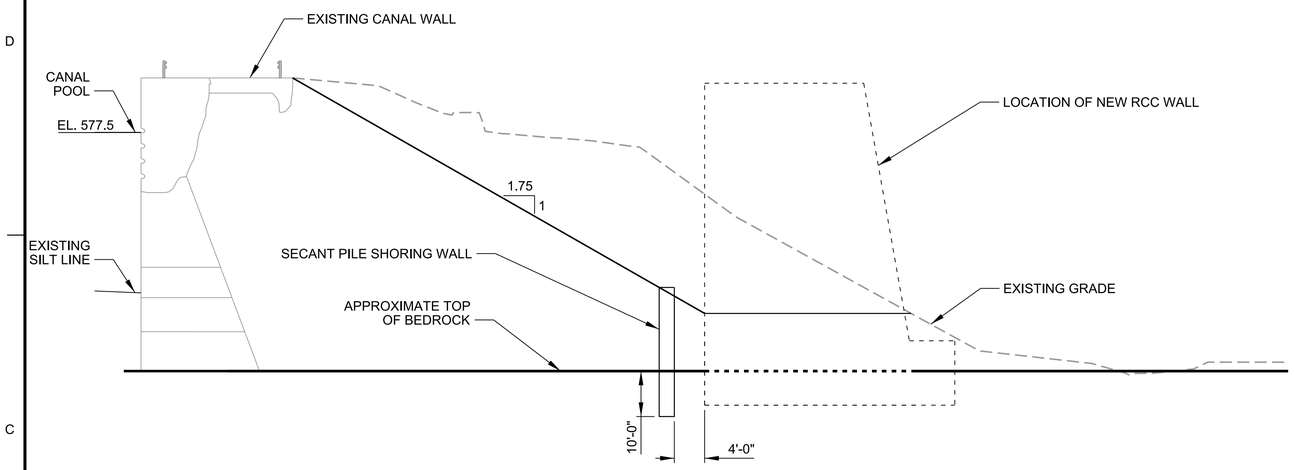

DWG REF(s) : _____

C1 SECANT PILE SHORING WALL SECTION

SCALE : 1"=10'-0"

0 10' 20'

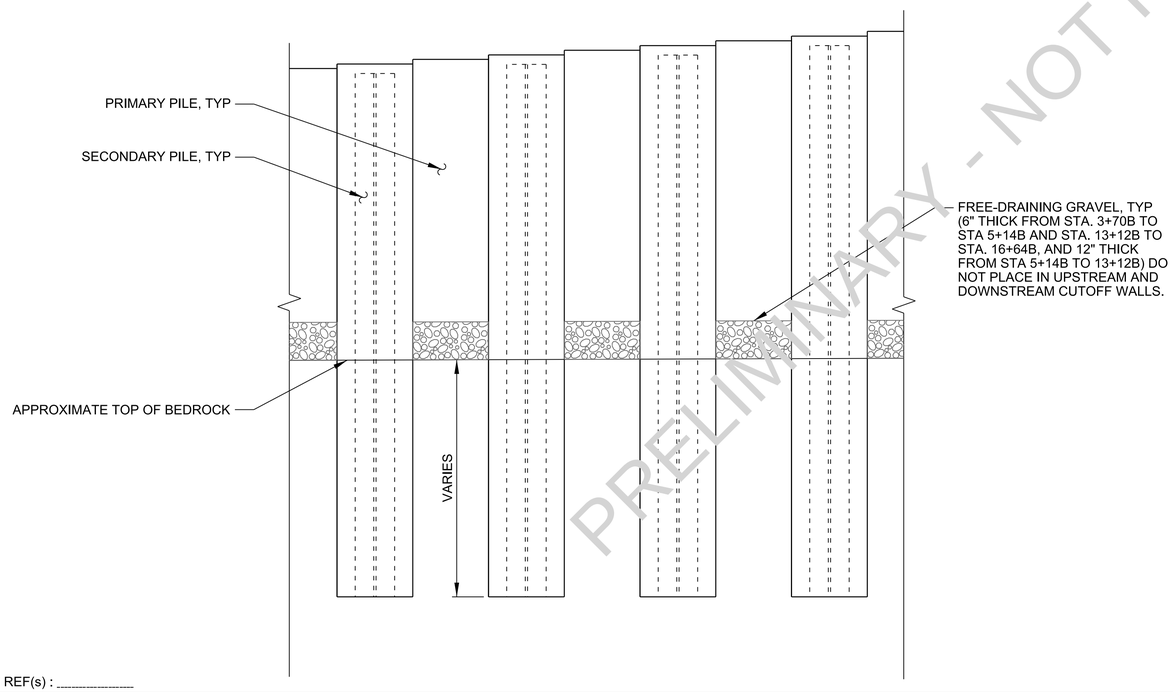

DWG REF(s) : _____

A1 SECANT PILE SHORING WALL DETAIL

SCALE : 1/2"=1'-0"

0 1' 2' 4'

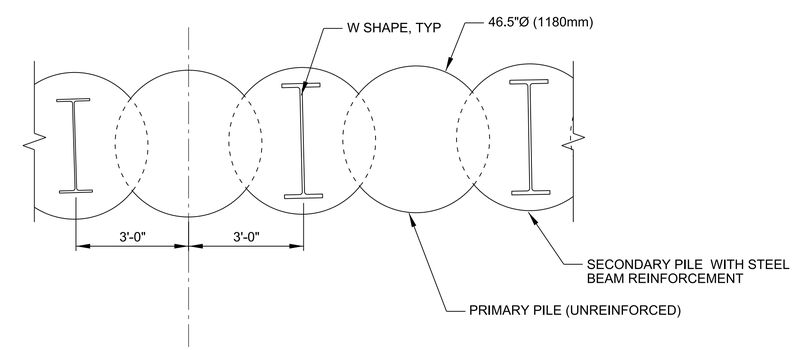

DWG REF(s) : _____

A3 SECANT PILE SHORING WALL DETAIL

SCALE : 1/2"=1'-0"

0 1' 2' 4'

PRELIMINARY - NOT FOR CONSTRUCTION

US Army Corps of Engineers®

MARK	DESCRIPTION	DATE	APPR.

U.S. ARMY CORPS OF ENGINEERS
ROCK ISLAND DISTRICT
ROCK ISLAND, ILLINOIS

DESIGNED BY: BTJ
DWN BY: AER
CKD BY: CCD
SUBMITTED BY: FRJ
PLOT SCALE: AS SHOWN
PLOT DATE:
SIZE: ANSI D
FILE NAME: LP26_S-501.dgn
DATE: 2013/08/16
SOLICITATION NO.: W912EK-13-R-0040
CONTRACT NO.:
PROJECT CODE: LP26

ILLINOIS WATERWAY
LOCKPORT POOL
LOCKPORT, IL
LOCKPORT POOL MAJOR REHABILITATION
STAGE IC, FOREBAY WALL, PHASE I
NEW SECANT PILE SHORING WALL DETAILS

Sheet ID
S-501

Z0MVRB09
8/20/2013
LP26_S-501.dgn

GENERAL NOTES

1. SEE THE PROJECT SPECIFICATIONS, SECTION 01 99 99 FOR MATERIAL REQUIREMENTS.
2. CONSTRUCTION OF THE MAINTENANCE GARAGE SHALL BE IN ACCORDENCE WITH THE 2012 INTERNATIONAL RESIDENTIAL CODE.

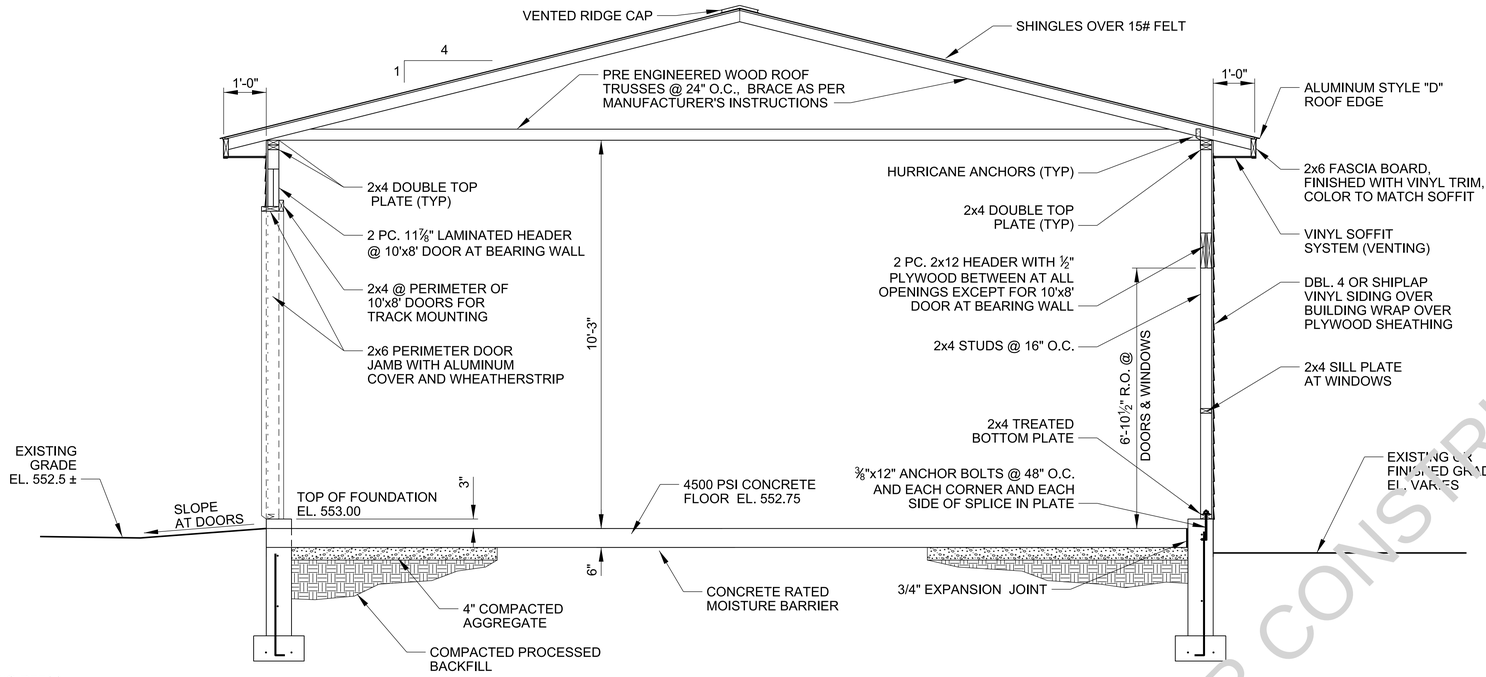

DWG REF(s) :

C1 TYPICAL SECTION
SCALE : 1/2"=1'-0"

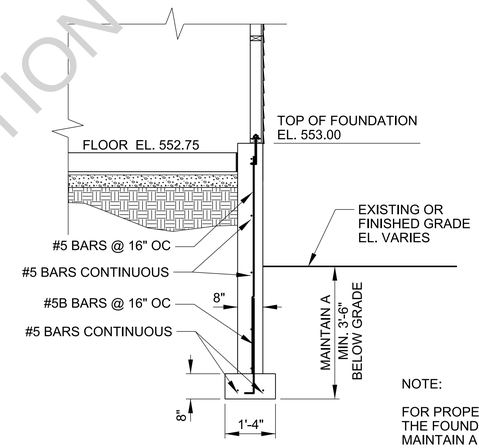

NOTE:

FOR PROPER FROST PROTECTION, THE FOUNDATION WALLS SHALL MAINTAIN A MINIMUM OF 3'-6" BELOW FINISHED GRADE.

DWG REF(s) :

C4 TYPICAL FOUNDATION DETAIL
SCALE : 1/2"=1'-0"

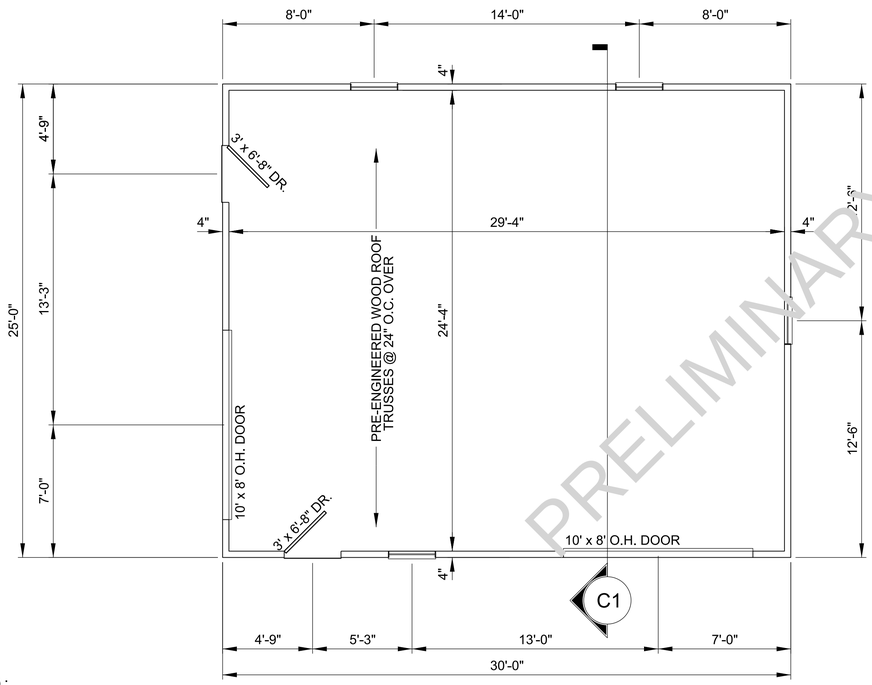

DWG REF(s) :

A1 FLOOR PLAN
SCALE : 1/4"=1'-0"

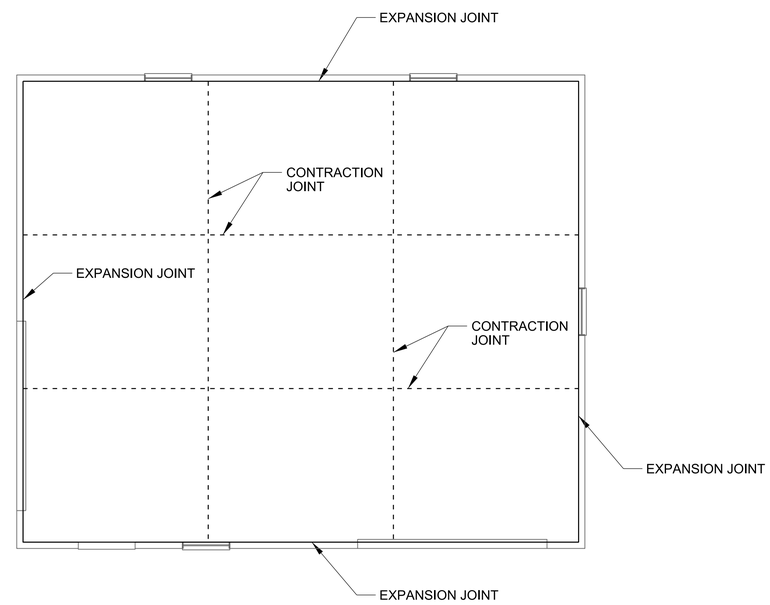

DWG REF(s) :

A3 JOINT PLAN
SCALE : 1/4"=1'-0"

PRELIMINARY - NOT FOR CONSTRUCTION

US Army Corps of Engineers®

MARK	DESCRIPTION	DATE	APPR.

U.S. ARMY CORPS OF ENGINEERS
ROCK ISLAND DISTRICT
ROCK ISLAND, ILLINOIS

DESIGNED BY: CTPT
DWN BY: NPP
CKD BY: JOL
SUBMITTED BY: JWB
PLOT SCALE: AS SHOWN
PLOT DATE:
SIZE: ANSI D
FILE NAME: LP26_A-101.dgn
DATE: 2013/08/16
SOLICITATION NO.: W912EK-13-R-0040
CONTRACT NO.:
PROJECT CODE: LP26

ILLINOIS WATERWAY
LOCKPORT POOL
LOCKPORT, IL
LOCKPORT POOL MAJOR REHABILITATION
STAGE IC, FOREBAY WALL, PHASE I
NEW MAINTENANCE GARAGE
PLAN, SECTION, AND DETAILS

Sheet ID
A-101

Z0MVRB09
8/20/2013
LP26_A-101.dgn

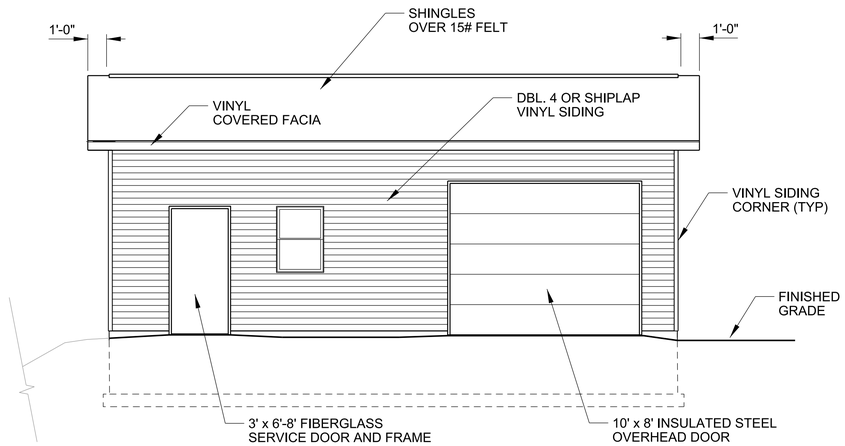

DWG REF(s) :

C1 FRONT (WEST) ELEVATION
SCALE : 1/4"=1'-0"

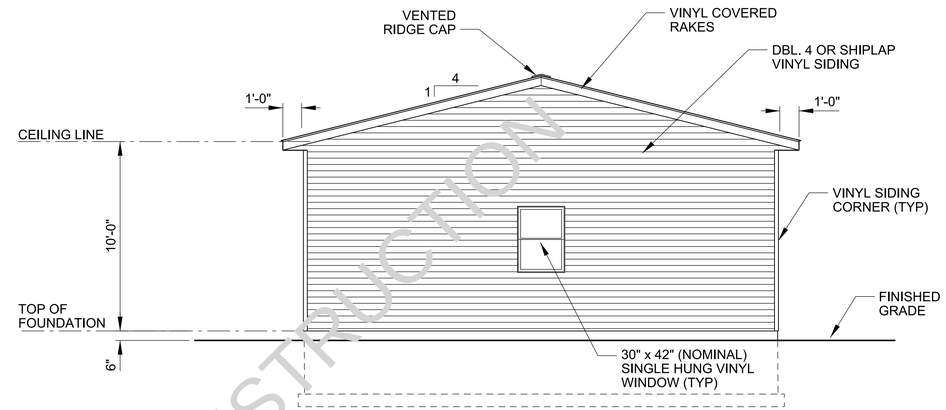

DWG REF(s) :

C3 RIGHT (SOUTH) ELEVATION
SCALE : 1/4"=1'-0"

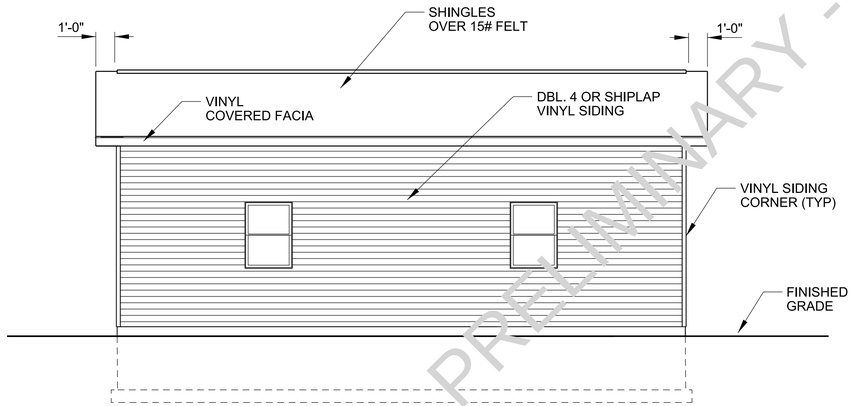

DWG REF(s) :

A1 REAR (EAST) ELEVATION
SCALE : 1/4"=1'-0"

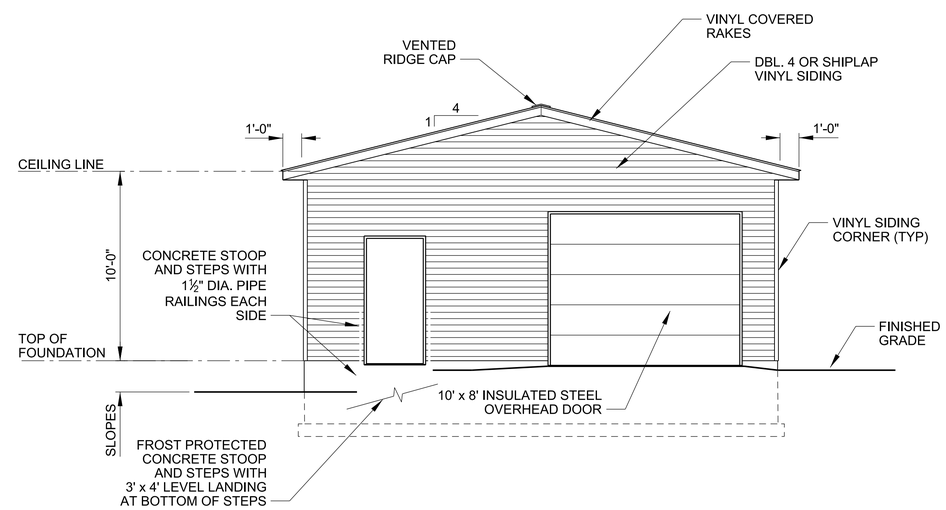

DWG REF(s) :

A3 LEFT (NORTH) ELEVATION
SCALE : 1/4"=1'-0"

PRELIMINARY - NOT FOR CONSTRUCTION

US Army Corps of Engineers®

MARK	DESCRIPTION	DATE	APPR.

U.S. ARMY CORPS OF ENGINEERS
ROCK ISLAND DISTRICT
ROCK ISLAND, ILLINOIS

DESIGNED BY: CTPT
DWN BY: NPP
CKD BY: JOL
SUBMITTED BY: JWB
PLOT SCALE: AS SHOWN
PLOT DATE:
SIZE: ANSI D
FILE NAME: LP26_A-102.dgn
DATE: 2013/08/16
SOLICITATION NO.: W912EK-13-R-0040
CONTRACT NO.:
PROJECT CODE: LP26

ILLINOIS WATERWAY
LOCKPORT POOL
LOCKPORT, IL
LOCKPORT POOL MAJOR REHABILITATION
STAGE IC, FOREBAY WALL, PHASE I
NEW MAINTENANCE GARAGE
ELEVATIONS

Sheet ID
A-102

Z:\MVR\BD9
8/20/2013
LP26_A-102.dgn