Upper Mississippi River and Illinois Waterway System Navigation Study Feasibility Report

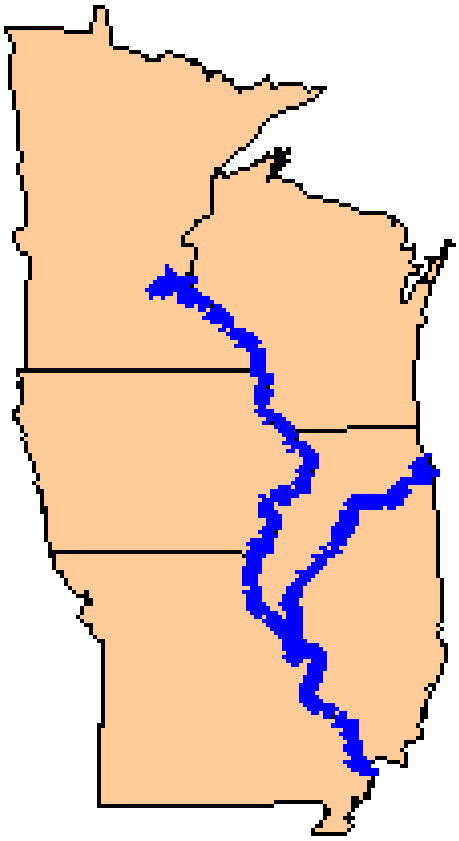

Site Adaptation of Cost Estimates and Lockage Performance for Surviving Lock Locations and Types

10 June 2000

US Army Corps of Engineers

Rock Island District
St. Louis District
St. Paul District

Site Adaptation of Cost Estimates and Lockage Performance for Surviving Lock Locations and Types

General....1
Cost Estimates....2
Cost....2
Price Level....5
Contingencies....5
Justification of Unit Price....5
Planning, Engineering, and Design....6
Construction Management....6
Limitations of Cost Estimates....6
Lock Performance....7
Single Lockage Steps....7
Double Lockage Steps....8
Approach Time Estimation....12
Filling and Emptying Time Estimation....14
References....18

Site Adaptation of Cost Estimates and Lockage Performance for Surviving Lock Locations and Types

General

This document contains the site adapted cost estimates and lockage performance prepared for the engineering appendix. This data was compiled during the course of the feasibility study and this document will provide the clearinghouse for this vast amount of numerical information

The original cost estimates were based on conceptual designs developed in reports titled, "Conceptual Lock Designs (1996)"and "Interim Revised Lock Extension Concepts (2000)." The conceptual designs included in the two reports were developed at the model sites of Lock 22 and Lock 25. Lock 22 was the model site for the rock-founded concepts and Lock 25 was the model site for the pile-founded concepts. Once the concepts were developed based upon conditions at Lock and Dam (L/D) 22 (rock-founded) and L/D 25 (pile-founded), they were adapted to the other 14 sites under consideration for large-scale improvements. These include L/D's 11-21 and 24 on the Mississippi River[1], and Peoria and LaGrange L/D's on the Illinois Waterway. Detailed estimates of each surviving alternative are presented in Appendix A of this document.

The lock performance has been defined as the lock's ability to lock tows efficiently. The lower the lockage time is for tows, the higher the efficiency is. For the majority of lockages on the current system, a double lockage is required. For these lockages, the lockage time equals the sum of the lockage steps. The steps of single and double lockages are shown in Figure 1 and discussed herein.

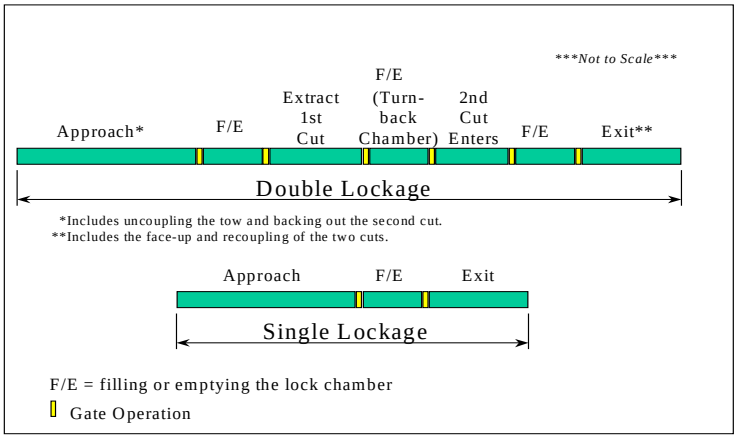

Figure 1: Illustration of Lockage Process

[1] There is no Lock and Dam 23 on the Mississippi River.

To estimate the performance of the lock chambers, the lockage process was broken into discrete steps. The duration of each step was estimated. Performance was estimated, based on a combination of LPMS data, navigation modeling at WES, and numerical modeling of the filling and emptying system. The lockage process was first disassembled into discrete steps, as defined in the LPMS data. The Engineering Work Group disassembled the lockage process further. The average time of each lockage activity was entered into the spreadsheet and summed to yield the total lockage time. A spreadsheet was developed for up-bound fly lockages, down-bound fly lockages, up-bound exchange lockages, down-bound exchanges, up-bound turn-backs, and down-bound turn-backs. This was completed for both 600-foot and 1200-foot lockages, to make a total of 12 spreadsheets. The completed sheets are presented in Appendix B of this report. The duration of each step was entered into spreadsheets and summed to develop estimations of the total lockage times.

Cost Estimates

The current working estimates for this study were developed from the concept drawings and descriptions. As further noted below, these cost estimates do not include certain site-specific impacts, and thus cannot be used alone to make a conclusive comparison between alternatives.

Cost.

The estimates include Federal construction, planning, engineering, design, and construction management costs. These costs are considered fair and reasonable to a well-equipped and capable contractor and include all labor, materials, equipment, overhead, and profit. Contingencies were applied at a rate of 25 percent [2]. Unit prices were based primarily on the "Report of the USACE Task Force on Design and Construction Innovations for Locks and Dams" (Reference 2), historical cost data from the Melvin Price Locks and Dam, and from a contracted independent review of innovative construction methods for locks (Reference 1). Planning, engineering, and design (PE&D) and construction management were applied at 10 percent each. For additional discussion of the cost estimates, see Appendix A of the Conceptual Lock Designs report (Reference 3).

After the lock concepts were developed at L/D's 22 and 25, these concepts were adapted to the other sites, taking into account the main site-specific differences. These differences included differences in head, bathymetry, topography, and foundation conditions. The estimates were developed to within the same 25 percent contingency level. Table 1 includes some of the important elevations in computing lock quantities for preparation of site-specific cost estimates.

[2] Contingencies of 20 percent were applied to the Type A locks. However, none of these locks survived the screening steps. In the Conceptual Lock Designs interim report, contingencies of 25 percent were used for the Type B and C locks.

Table 1: Important Elevations For Computing Site-Specific Quantities And Costs

LOCK SITE	Water Surface Nominal Values: Flat Pool	Water Surface Nominal Values: Tailwater	("Lowest Operating") Reference Water Surfaces for Types B & C[1]: Upper	("Lowest Operating") Reference Water Surfaces for Types B & C[1]: Lower	Types B & C Lock Criteria[2]: Chamber Floor Elev. (Max.)	Types B & C Lock Criteria[2]: Lower Sill Elev. (Max.)	Types B & C Lock Criteria[2]: Upper Sill Elev. (Max.)	Top of Lockwall Elevation	Rock Elevation (Varies)[3]	LOCK SITE
L/D 11	603.0	592.0	602.6	592.0	574.7	576.7	587.3	612.5		L/D 11
L/D 12	592.0	583.0	591.6	583.0	565.7	567.7	576.3	603.0		L/D 12
L/D 13	583.0	572.0	582.6	572.0	554.7	556.7	567.3	592.0		L/D 13
L/D 14	572.0	561.0	570.6	561.0	543.7	545.7	555.3	577.5	547.9	L/D 14
L/D 15	561.0	545.0	559.0	545.0	527.7	529.7	543.7	568.3	535.1	L/D 15
L/D 16	545.0	536.0	543.8	536.0	518.7	520.7	528.5	554.0		L/D 16
L/D 17	536.0	528.0	535.6	528.0	510.7	512.7	520.3	548.0		L/D 17
L/D 18	528.0	518.2	527.6	517.2	499.9	501.9	512.3	537.5		L/D 18
L/D 19	518.2	480.0	518.2	480.4	463.1	465.1	502.9	525.8	468.0	L/D 19
L/D 20	480.0	470.0	477.0	470.2	452.9	454.9	461.7	488.0	460.0	L/D 20
L/D 21	470.0	459.5	469.6	459.3	442.0	444.0	454.3	483.5		L/D 21
L/D 22	459.5	449.0	459.1	447.8	430.5	432.5	443.8	471.5	435.0	L/D 22
L/D 24	449.0	434.0	449.0	434.0	416.7	418.7	433.7	457.0	428.0	L/D 24
L/D 25	434.0	419.0	434.0	419.0	401.7	403.7	418.7	444.0		L/D 25
Peoria	440.0	429.0	440.0	429.0	411.7	413.7	424.7	445.0		Peoria
LaGrange	429.0	419.0	429.0	419.6	402.3	404.3	413.7	434.0		LaGrange

Notes:

1. Records are kept of "Lowest Operating" pool and tailwater elevations. These are considered reasonable approximations of minimum pool and tailwater.
2. These elevations are per the criteria established for Types B and C locks. The sills and floor can be lower than these values, but not higher.
3. The rock elevations shown are typical of top of rock elevations noted from several borings or rock soundings. Only locks at L/D 14, 15, 19, 20 (Loc 2 and 3 only), 22, and 24 (Loc 2 and 3 only) would be founded directly on rock. The other sites have deeper rock and locks constructed there would be pile-founded.

For most of the alternatives the cost where developed directly based on site specific differences. However, the level of effort to recalculate to quantities and develop new estimates for each site was extensive. Many of the items where proportionally the same for site to site. To reduce the effort required for each site, some estimates of the revised concepts where indirectly calculated. For Example, the estimate for the revised concept at location 2 was calculated based on the proportion of the 2C cost estimates between 18 and 25. The cost of the location 2C is known at both sites and the cost of the location 2R is known at 25. Using the Equation in Figure 2, estimates for several sites were calculated. The rock founded locations used Lock 22 proportions and the pile founded location used Lock 25 proportions. Similarly the 3C proportions where used to calculate the 3R estimates where used. Table 2 highlights which estimates that were calculated using the proportioning method. This method was compared with the other estimates completed at other sites and locations and appeared to yield reasonable results. Thus, this methodology was applied for the 2R estimates at sites 18 and above on the Mississippi.

$$18_Loc_2R = \frac{18_Loc_2C}{25_Loc_2C} 25_Loc_2R$$

Figure 2: Proportioning used for Cost Estimates

Table 2: Table of Estimates Completed

Lock Site/ Length	Lock Alter-native	Type
LaGrg.	Existing Lock	
1,200ft	Loc 1	1C
	Loc 2	2B
		2R
600 ft	Loc 1	1C
Peoria	Existing Lock	
1,200ft	Loc 1	1C
	Loc 2	2B
		2R
600 ft	Loc 1	1C
25	Existing Lock	
1,200ft	Loc 1	1C
	Loc 2	2B
		2R
	Loc 3	3C
	Loc 4	4B
		4C
600ft	Loc 1	1C
	Loc 3	3C
	Loc 4	4B
		4C
24	Existing Lock	
1,200ft	Loc 2	2B
		2C
		2R
	Loc 3	3B
		3C
	Loc 4	4B
		4C
600ft	Loc 3	3B
		3C
	Loc 4	4B
		4C
22	Existing Lock	
1,200ft	Loc 2	2B
		2C
		2R
	Loc 3	3B
		3C
	Loc 4	4B
		4C
600ft	Loc 3	3B
		3C
	Loc 4	4B
		4C

Lock Site/ Length	Lock Alter-native	Type
21	Existing Lock	
1,200ft	Loc 2	2B
		2R
	Loc 3	3C
	Loc 4	4B
		4C
600ft	Loc 3	3C
	Loc 4	4B
		4C
20	Existing Lock	
1,200ft	Loc 2	2B
		2C
		2R
	Loc 3	3B
		3C
	Loc 4	4B
		4C
600ft	Loc 3	3B
		3C
	Loc 4	4B
		4C
19	Existing Lock	
1,200ft	Loc 3	3B
18	Existing Lock	
1,200ft	Loc 2	2B
		2R*
	Loc 3	3C
	Loc 4	4B
		4C
600ft	Loc 3	3C
	Loc 4	4B
		4C
17	Existing Lock	
1,200ft	Loc 1	1C
	Loc 2	2B
		2R*
	Loc 3	3C
	Loc 4	4B
		4C
600ft	Loc 1	1C
	Loc 3	3C
	Loc 4	4B
		4C

Lock Site/ Length	Lock Alter-native	Type
16	Existing Lock	
1,200ft	Loc 2	2B
		2R*
	Loc 3	3C
	Loc 4	4B
		4C
600ft	Loc 3	3C
	Loc 4	4B
		4C
15	Existing Lock	
1,200ft	Loc 2	2B
		2C
		2R*
	Loc 3	3B
		3C
600ft	Loc 3	3B
		3C
14	Existing Lock	
1,200ft	Loc 2	2B
		2C
		2R*
	Loc 4	4B
		4C
600ft	Loc 4	4B
		4C
13	Existing Lock	
1,200ft	Loc 2	2B
		2R*
	Loc 3	3C
	Loc 4	4B
		4C
600ft	Loc 3	3C
	Loc 4	4B
		4C
12	Existing Lock	
1,200ft	Loc 2	2B
		2R*
	Loc 3	3C
	Loc 4	4B
		4C
600ft	Loc 3	3C
	Loc 4	4B
		4C
11	Existing Lock	
1,200ft	Loc 2	2B
		2R*
	Loc 3	3C
600ft	Loc 3	3C

* Illustrates estimates completed with proportioning method described above.

Price Level.

Project element costs are based on January 1996 prices. These costs are considered fair and reasonable to a well-equipped and capable contractor and include overhead and profit.

Contingencies.

Uncertainties inherent at this conceptual stage of design require large contingencies to be incorporated into the cost estimates. These contingencies are needed to provide for potential cost increases as the designs are developed in more detail during site-specific studies. Appendix C of ER 1110-2-1302, "Types of Cost Estimates," recommends a contingency of 20 percent during the reconnaissance and feasibility study stages for projects with construction estimates greater than $10,000,000. This guidance further states that,

"...adjustments [to contingency levels] may be warranted by virtue of additional studies or investigations having been made which further refine the knowledge and information relating to any project feature or *point out any further areas of uncertainties regarding the project estimate*."

The greatest amount of design and construction uncertainty is with the lock Types B and C, and the least uncertainty is with the Type A locks. Accordingly, contingencies of 20 percent were used for Type A lock designs and contingencies of 25 percent were used for Type B and C designs.

Justification of Unit Price.

The unit prices for this study include labor, material, equipment, overhead and profit. Normally a feasibility study results in a selected alternative requiring a detailed Micro Computer Aided Cost Estimate System (MCACES) estimate. However, due to the vast array of alternatives, the Engineering Work Group of the Navigation Study recommended use of unit prices. This recommendation was supported by HQUSACE. The labor rates are from the St. Louis Area. For this study, three primary resources were used to find the unit prices:

1. A report from Ben C. Gerwick, Inc., titled, "Upper Mississippi River - Illinois Waterway System, Navigation Study, Innovative Lock Concept Review: 1200' Lock Capacity, Alternate Construction Techniques and Constructibility Review," December 1994. The primary purpose of this report was to review the constructibility of extending an existing lock from 600 feet to 1200 feet (Location 2). Brief constructibility reviews of other lock locations were reported as well. Included in this report are cost estimates for the various options and a detailed explanation of the unit prices used in the cost estimates.

2. Historical Cost Data from Melvin Price Locks and Dam. The Melvin Price Locks and Dam was the most recent major lock construction project and it included a new 1200-foot-long lock, a new 600-foot lock, and a new dam. Many of the bid items in that project have requirements similar to the cost items of the Navigation Study.

3. U.S. Army Corps of Engineers, EP-1110-1-14, "Report of the USACE Task Force on Design and Construction Innovations for Locks and Dams," dated 30 April 1994. This report contains cost estimates for alternative, innovative lock designs.

Unit prices were continually monitored during the course of the study. The unit prices were compared to unit prices developed from other projects with similar work items. They served as a quality control check to ensure fair and reasonable prices were used in the study. These sources include, but are not limited to, Ohio River Mainstem System Study, Braddock Dam Replacement, Winfield Lock Replacement, Olmstead Lock and Dam, and Lock 24 Guide Cell. Unit prices were also compared to historical unit prices of major rehabilitation work completed on several locks and dams in the UMR-ILWW system.

Planning, Engineering, and Design.

Planning, engineering, and design (PE&D) includes design memorandums, all stages of plans and specifications, and engineering during construction; it does not, however, include work during the site-specific feasibility phase. A uniform rate of 10 percent of construction costs was used for PE&D costs, since it was determined that adjusting the PE&D rate for each lock alternative would not change the cost rank of lock alternatives. Nevertheless, there would be differences in PE&D rates among design alternatives that would need to be considered in site-specific studies. Construction costs savings do not necessarily result in design cost savings, and some of the innovative lock designs may actually have higher design rates than conventional designs. However, use of repetitive construction and design simplification can reduce design effort. There is a minimum PE&D cost for lock design, since certain design activities are required for all lock alternatives (design work to ensure structural stability, adequate strength/durability, safe navigation conditions, safe construction conditions, etc.). The PE&D rate would also reach a maximum as construction costs passed a certain threshold, above which cost increases were only due to more of the same type of construction (i.e., increased quantities) or costlier materials. Many of the factors influencing PE&D rates tend to be offsetting, and this contributed to the decision to use a uniform rate for PE&D costs.

Construction Management.

A uniform rate of 10 percent was also used for construction management, since it was determined that adjusting the rate by lock alternative would not change the cost rank of alternatives. Construction management costs are generally proportionate to construction duration, construction difficulty, and construction risk, among other factors. However, these are likewise proportionate to construction cost. This was further reason to use the uniform rate. More-detailed studies would be needed to more accurately reflect construction management costs.

Limitations of Cost Estimates.

The cost estimates on the following pages do not address all costs and impacts of construction of a new lock. Specifically not included are impacts to navigation during construction, environmental impacts, variations in construction duration (variation in

time to receive project benefits), and a number of site-specific concerns. Therefore, further site-specific studies would be needed to obtain more certain cost estimates.

Lock Performance

Most UMR&IWW lock chambers are 600 feet long by 110 feet wide. Tows that are this size or smaller are able to lock through as a single lockage, i.e., in one piece. Larger tows, such as the prevailing 15-barge tow, which is about 1200 feet long by 105 feet wide, must lock through as a double lockage, i.e., in two pieces. The double lockage process adds several steps and considerable time to the lockage process. The major elements of a single and double lockage, the two most common types of lockage, are summarized below. For these lockages, the total lockage time equals the sum of the duration of the lockage steps.

Single Lockage Steps.

A lockage can be a single lockage only when the lock chamber is at least as large as the tow. The steps of a single lockage are as follows:

1. Approaching.
2. Entering the chamber.
3. Gate operation.
4. Filling or emptying of the lock chamber.
5. Gate operation.
6. Exiting.

Vessels first must approach the lock. The approach process includes the time it takes for the tow to approach the lock, get aligned with the **guidewall**, and place its **bow** (front of boat) over the near gate **sill** of the chamber. The vessel entry time extends from the time when the tow gets its bow over the sill until the tow is fully in the chamber and the gate can be closed. For a vessel traveling downstream (a **down-bound** vessel), the lock chamber is first filled (if it is not already at the **upper pool** level) by closing the lower lock gates and the downstream valves, and opening the upstream filling valves. The level of water in the chamber rises to the upstream level as the water from the upper pool flows through the culverts and into the lock chamber. The upper gates then open and the vessel enters into the chamber by pushing along the guidewall.

Once the vessel is secured inside the lock chamber, the upstream gates are closed. The vessel is then lowered by closing the filling valves and opening the downstream or emptying valves. The water in the chamber flows back into the culvert and then out into the **lower pool**, lowering the water level within the chamber until it is equal to the water level downstream of the lock. When the water level in the lock chamber is even with the lower pool level, the lower gates are opened and the vessel exits the lock. The process is reversed for vessels going upstream (i.e., for **up-bound** vessels).

Double Lockage Steps.

Double lockages, the most common type of commercial lockage, are required when total tow length exceeds the chamber length. The double lockage steps are:

1. Approaching.
2. Entering the chamber.
3. Uncoupling the tow and backing the second **cut** out of the chamber*.
4. Gate operation.
5. Filling or emptying of the lock chamber.
6. Gate operation.
7. First cut exiting the lock chamber*.
8. Gate operation*.
9. Filling or emptying of the lock chamber {opposite direction of step (4)}*.
10. Gate operation*.
11. Second cut entering the lock chamber*.
12. Gate operation*.
13. Filling or emptying {same as step (4)}*.
14. Gate operation*.
15. Recoupling the tow*.
16. Exiting.

*These steps are only involved when the size of the tow exceeds the size of the lock chamber. The most common example of this in the current **navigation system** is with 1200-foot-long tows transiting through 600-foot-long locks.

Double lockages require several additional steps compared to those of a single lockage. Just as with a single lockage, in a double lockage the lockage begins as the full tow approaches and enters the chamber. Due to the tow's length, the first cut (the unpowered section of tow or "**unpowered cut**") must be uncoupled from the rest of the tow and locked separately. The **towboat** and remaining barges (the "**powered cut**") then back away and allow the first cut to lock through. At this point, the lock gates are closed and the chamber filled or emptied, depending upon whether the tow is up-bound or down-bound.

Depending on the status of the chamber when the tow arrives at the lock, lockages are separated into three different categories: fly, turn-back and approach. On a fly lockage the lock is available when the tow arrives. The chamber is not slave to another tow when the new tow arrives. The fly tow is free to approach the chamber and enter it. On a turn-back lockage, the chamber is currently occupied by a tow going the same direction upon the arrival of a new tow. This is called a turn-back lockage because the chamber will need to be "turned back" to make it ready for the second tow. The exchange lockage occurs when a tow arrives and the chamber is currently occupied by another tow locking in the opposite direction. These three lockage types are all considered in the detailed analysis of the lock performance

With single and double lockages or fly, turn-back, and exchange lockages, many elements remain common. The lockage elements are similar, but the double lockage

repeats some elements during the lockage process. Table 2 contains descriptions of the lockage elements.

Table 3: Description of Lockage Elements

Approach (Fly, Turn-back, or Exchange):	The duration required for the tow to make the approach to the lock. For fly approaches, each lock appears to begin timing this element at a different point. Thus this varies from lock to lock. On turn-back lockages, the approach is not included in the timing because it is assumed that the tow makes its approach concurrent with operation of the previous lockage, once the lock chamber is recycled to accept the next tow. The tow is already on the wall ready to begin entry into the chamber. With exchange lockages, the tow is waiting to begin its approach. When the previous tow has sufficiently cleared the approach, the waiting tow can begin its approach to the chamber. At locks, the exchange point for passing tows is a significant distance from the lock. Thus the approach time for exchange lockages is very long.
Chamber Entry:	The chamber entry is the time from when the bow of the tow crosses the sill to the time that the tow is structured in the chamber. For the new 1200-foot chambers, LPMS data is not available. To estimate entry time, existing entry time of a 1200-foot tow into a 600-foot chamber was modified by adding 3.4 minutes. The 3.4 minutes came from estimation of speed on entering tow lock chambers. Using the estimated speed it, the EWG calculated the time it would take a tow to move an extra 600 feet.
Uncoupling (and backing 2nd cut out of chamber):	This is the time it takes to disconnect the first cut and back the second cut clear of the gates, so that they may be closed.
Gate Operation:	This is a generic term for opening or closing the miter gates.
Emptying (or Filling) the Chamber:	The duration to raise the water level from the lower tail-water elevation to the upper pool elevation or lower the water level in the chamber from upper pool to lower tail-water elevations.
Extract First Cut:	This duration is the time it takes to remove the first un-powered cut from the chamber and secure it to the guidewall.
2nd Cut Entry:	This is the duration for the second cut to move off the guidewall, enter the chamber and be secured in the lock chamber.
Tow Remake:	This is defined as the time it takes to reconnect the second cut to the first cut.
Exit (Fly, Turn-back or Exchange):	The time that it takes the tow to clear from the chamber and make the chamber available for the next tow. This time is different for the three lockage types.

If lock chambers were as large as the maximum tow size, double lockages would no longer be required. For the Mississippi River and Illinois Waterway, the maximum tow size is also the prevailing tow size, i.e., about 1200 feet long by 105 feet wide. Constructing a 1200-foot-long lock at a site would eliminate a number of the lockage steps currently required, resulting in a very large reduction in lock transit time. This is true regardless of the lock type or location. The resulting lockage would then be a single lockage.

Table 4 gives an overview of the existing lockage times and estimated new lockage times for 1,200-foot tows at new or extended chambers. The savings represent the potential reduction in time associated with eliminating the need to conduct double lockages and the steps discussed earlier. In general, eliminating the double lockage steps saves a tow approximately 60 minutes (eliminates the need to extract first cut, turn back chamber, enter and lock a second cut, and remake; see time differences in Figures 1 and 2). However, due to the extra time needed to enter and exit a longer chamber and the longer filling and emptying times associated with the greater water volumes, somewhat smaller savings are anticipated, as shown below. In contrast with existing double lockages, existing single lockages (tows less than 600 feet) would actually experience a minor increase in lockage time because they would be transiting an additional 600 feet of chamber and because the filling and emptying of the large volume of water requires some additional time. This increased time is likely to be offset by the greater ability to lock multiple small tows, recreational craft, and combinations of vessels together. In contrast, a new 600-foot chamber is not expected to provide much faster lockages per tow. The principal improvement is simply having an additional chamber available. The small time differences shown in Table 20 are generally related to filling and emptying times and approach and exit conditions. Filling and emptying times, approaches and exits are anticipated to be somewhat worse at Locations 1 and 2 locks.

Table 4: Average Lockage Time And Savings Of 1200-Foot And 600-Foot Locks

Location/Type	Avg Lockage Time[1,3] (Min)	Avg Savings[1,3] (Min)	Number of Sites[2]
Existing 600'	103	-	15
1,200 ft Locks			
1C	59	43	4
2B	54	49	15
2C	57	46	5
2R[4]	57	46	15
3B	59	44	4
3C	53	49	12
4B	52	50	11
4C	52	50	11
600 ft Locks			
1C	107	-4	4
Loc 2	N/A	N/A	N/A
3B	106	-3	4
3C	100	3	12
4B	99	4	11
4C	99	4	11

Notes:
[1] The average values assume equal numbers of fly, exchange, and turn-back lockages. However, in actuality these are not equal. The time savings shown are from tows currently needing double lockages (e.g., greater than 600 feet total length). Smaller tows can lock in significantly less time. For numbers shown, turn-back approaches are assumed to take place during lockage of the previous tow.
[2] Number of sites evaluated is shown out of a possible 15. While Lock 19 was also evaluated, it already has a 1,200-foot chamber and as a result would skew the results.
[3] There is no difference in the performance between Type B and C at any location; differences shown only relate to the fact that averages are for different numbers of sites.
[4] Taking into consideration only the same locations, Type 2R locks are anticipated to be 2 minutes slower for fly and exchange lockages, and 4 minutes slower for turn-back lockages than other Type 2 locks.

In comparing lock alternatives of the same size at the same site, most of the lockage steps are of equal duration. The times for entering the chamber, gate operation, and exit are essentially constant for all alternatives. There could be differences in the durations of two of the remaining lockage steps: approach times and filling and emptying times. There are different influences on these two lockage components. The *approach time* varies from one site to another, and could be different at different lock locations at a given site. However, if each lock location is designed to equal channel standards, the differences in approach times among the different locations at a site are expected to be negligible. Nevertheless, the *cost* of the required channel work will vary by lock location and this is accounted for in the lock cost estimates. The *filling and emptying time* is dependent upon lock size and lock type (especially the design of the filling and emptying system). The filling and emptying times vary by the lock lift (or head differential) also; however, this is equal among the lock alternatives at a given site. The quantification task for lockage time was therefore focused on the approach times and filling and emptying times for the surviving lock alternatives. These estimates follow.

Approach Time Estimation.[3]

The approach times for the new lock alternatives were developed based upon the navigation modeling results for L/D's 22 and 25, and the estimates of approach time improvement made in the analyses of small-scale measures. It was determined that the maximum approach time improvement that could be attained at the existing Lock 22 is about 35 percent. This saving was achieved for the existing lock by including a river side guard wall and channel improvement measures such as constructing a dike field and widening the approach channel. The L/D 25 model results showed even higher time savings; however, some of this savings was attributed to differences in the starting point for measurement.[4] Therefore, the more conservative L/D 22 approach improvement results were used. Across lock locations, the modeling showed approximately equal approach times for L/D 25.[5] Therefore, it was assumed that approach times at other lock sites would likewise be nearly the same across locations, provided similar channel improvement measures were employed. The next assessment was to determine how much potential improvement there is at the other sites; i.e., the worse the existing approach conditions, the more potential there is for improvement. Since L/D 22 has the worst existing approach times of the locks in the study, the 35 percent improvement experienced in the model study for L/D 22 is thought to be the maximum improvement achievable at other lock sites. At the opposite extreme from L/D 22, it is unlikely that *any* improvement could be made to the approach at L/D 13. The magnitude of the approach time improvements applied at each site were those estimated for the same channel improvements for the small-scale analysis.[6]

Table 4 shows the existing and estimated new approach times for the sites under consideration for large-scale navigation improvements. Approach times vary significantly due to a number of influences. These influences include variations in towboat power and experience of the tow captain, loading condition (i.e., loaded or

---

[3] Only down-bound fly approaches were quantified. Up-bound approaches tend to be less variable and less troublesome. Fly approaches are unobstructed approaches that depend mainly upon the channel conditions. The fly approach times can be used to gauge the exchange and turn-back approach times. However, the latter have other influences, such as the movement of other tows.

[4] The model results are not comparable to the Lock Performance Monitoring System (LPMS) data, due to differences in starting point for measurement. Since LPMS data is available at all locks, and navigation model results are available only at L/D's 22 and 25, the LPMS data was used as a benchmark of existing approach times for each site. New approach times were arrived at by adjusting these benchmark values, based upon their potential for improvement (eliminating flanking maneuvers, etc.).

[5] Precise approach times are not needed for comparison of large-scale measures, since the approach times do not become critical until capacity is reached some time in the future. For L/D 22, the modeling results across locations are not comparable because Location 2 had an improved channel and the others did not.

[6] With the percent improvement determined as noted from the small-scale analysis, the new approach times were determined as follows:

$t_i^* = t_i - t_i\,(\%\text{improvement}) = t_i\,(1 - \%\text{improvement})$ where: t_i^* = improved approach time, t_i = LPMS approach time

$E(t^*) = E(t) \times (1-\%\text{improvement})$ where: $E(t^*)$ = expected value of t^*, $E(t)$ = expected value of t

Assuming that the %improvement is just a constant, then:

$S(t^*) = S(t) \times (1-\%\text{improvement})$ where: $S(t^*)$ = standard deviation of t^*, $S(t)$ = standard deviation of t

empty), tow configuration and number of barges, ice conditions, wind conditions, and flow conditions. To help capture this uncertainty, the standard deviation (σ) of the existing approach times is shown along with the mean (μ). Both of these values are from LPMS data for 1990. The new approach times will also have significant variation, although less than that for existing conditions. That is because the channel improvements and guard walls will provide tows relatively consistent and favorable approach conditions, being less subject to the flow and other influences. The reduction in variability is an added benefit beyond reducing the average approach time. The standard deviations of the new approaches were determined by applying the ratio of the new/existing mean approach times to the existing approach standard deviation.

The treatment of the Location 2 lock approach conditions presents a choice. If channel work and a river side guard wall were constructed in similar fashion to other lock locations, severe delays to navigation during construction would result. However, the resulting approach times after construction would be improved. Alternatively, a Location 2 lock could be left with the existing approach conditions to avoid the economic impacts to navigation during construction. The Engineering Work Group determined the cost and performance differences for each choice. This enabled the Economic Work Group to determine which alternative would be most favorable.

Table 5: LOCK APPROACH TIMES[1] (Down-bound Fly)

Lock and Dam Site	Existing Lock Approach Times (minutes)[2]	New Lock Approach Times (minutes)[3]
L/D 11	μ=28 σ=12	μ=19 σ=8
L/D 12	μ=20 σ=10	μ=14 σ=7
L/D 13	μ=18 σ=8	μ=18 σ=8
L/D 14	μ=24 σ=12	μ=19 σ=10
L/D 15	μ=24 σ=15	μ=16 σ=10
L/D 16	μ=32 σ=15	μ=21 σ=10
L/D 17	μ=40 σ=15	μ=27 σ=10
L/D 18	μ=32 σ=14	μ=28 σ=12 for Loc.s 2&3 [μ=22 σ=10 for loc 4][4]
L/D 19	μ=18 σ=14	μ=15 σ=12
L/D 20	μ=32 σ=15	μ=21 σ=10
L/D 21	μ=33 σ=14	μ=23 σ=10
L/D 22	μ=50 σ=16	μ=32 σ=10
L/D 24	μ=22 σ=12	μ=15 σ=8
L/D 25	μ=24 σ=13	μ=16 σ=8
Peoria L/D	μ=19 σ=10	μ=16 σ=9
LaGrange L/D	μ=20 σ=11	μ=14 σ=8

NOTES:

1. Where μ is used, it is to denote the mean (or average) approach time. Where σ is used, it is to denote the standard deviation of the approach times.
2. The data shown for existing conditions are from 1990 data on down-bound fly approaches. Nineteen-ninety is considered a representative year.
3. In general, the "new" times are for any of the lock locations. However, for the new Location 2 locks, there are two options (to be compared by a separate economic analysis). One option assumes the upstream approach conditions (and times) would remain unchanged. The other assumes that an improved channel, plus a river side guard wall, will be constructed, resulting in the reduced approach times shown but higher first costs and economic impacts to navigation during construction.
4. Channel constraints on Locations 2 and 3 at L/D 18 are not a restriction to a Location 4 lock.

Filling and Emptying Time Estimation.

Lock filling and emptying times were computed for each location and design alternative under consideration, using the Tennessee Valley Authority (TVA) program TFSIM, as discussed below.

Model Description and Procedure.

TFSIM is a one-dimensional, numerical model for simulating unsteady flow in the filling and emptying system of a lock. The numerical model requires specification of the geometry and hydraulic characteristics of the filling and emptying system, the valve opening schedule, and the headwater and tailwater elevations. Two models were

constructed for each of the conceptual lock designs and locations under consideration, one for the filling of the lock chamber and the other for emptying. The conceptual lock designs consist of conventional side port filling systems (with a variety of culvert dimensions), a single-culvert side port filling system, and bottom-filling systems with one or more longitudinal culverts located between the lock walls. Since the conceptual designs lacked much of the information required to run the model, it was necessary to approximate the final design based on criteria outlined in EM 1110-2-1604, Appendix D. Specifically, the size, spacing and location of the filling ports were determined.

Filling and emptying times for new 1200-foot locks were computed for a "typical" lift using the 50 percent duration head and tailwater elevations. Each model was run for a variety of valve operating times in order to determine the fastest operating time that would produce longitudinal hawser forces less than 5.0 tons. Since the model is one-dimensional, no estimate of the *lateral* hawser forces or surface turbulence can be made. In order to compensate for the uncertainties in the lateral hawser forces and surface turbulence, a minimum valve time of 4.0 minutes was used, regardless of the longitudinal hawser forces developed with shorter valve times. This is the minimum recommended valve time given in EM 1110-2-1604, Appendix D for a 1270-foot by 110-foot lock. Output from the model consisted of water surface profiles of the lock chamber (for determination of lock filling time as well as instantaneous longitudinal hawser forces), cavitation potential downstream of the filling valve, culvert velocities, and individual port flows. Filling and emptying times for new 600-foot locks are assumed to be the same as those recorded in the Lock Performance Monitoring System (LPMS) database for the existing 600-foot locks. This is a satisfactory approximation, since both the existing 600-foot lock filling and emptying times and those of the new 600-foot locks (judging by the 1200-foot lock times) are relatively small.

Model Results.

The filling and emptying times and differences by lock location are summarized in Table 5. Existing filling and emptying times are on the order of 4 to 5 minutes each. These times are anticipated to increase by 3 to 7 minutes due to the greater volume of water. The slowest times are associated with Location 1, which uses a center fill system that must empty into the lower approach due to the lock location and thereby reduce performance. The filling and emptying times computed for each alternative lock location and type are shown in Table A-59.

Table 6: Filling and Emptying Times and Differences by Lock Location (Minutes)

	Filling		Emptying	
	Time Estimate[2]	Additional Time	Time Estimate[2]	Additional Time
Existing[1]	4.1		4.5	
Loc 1[3]	10.6	6.5	11.5	7.0
Loc 2[4]	9.0	4.9	11.1	6.6
Loc 3	7.4	3.3	10.0	5.5
Loc 4	7.1	3.0	9.1	4.6

[1] Times represent 1990 averages for UMR Locks 11-25 and IWW Locks Peoria and La Grange at 600-foot chambers.
[2] New Location 1-4 estimated times and savings based on engineering study efforts and 1,200-foot chambers.
[3] Location 1 has slower times due to the design and use of a center fill system that empties into the lower approach.
[4] Location 2 refers to 2 R and slower times associated with not extending the filling and emptying system.

Table 7: Filling and Emptying Times for New Lock Alternatives

Lock Site	Lock Location & Type	50% Pool Elev.	50% Tail Elev.	50% Lift	Chamber Floor Elev.	50 % **Fill Time (minutes)**	50 % **Empty Time (minutes)**
11	2B	603.0	593.6	9.4	574.7	7.7	10.3
	2C	603.0	593.6	9.4	574.7	7.7	10.3
	3B	603.0	593.6	9.4	574.7	7.7	10.3
	3C	603.0	593.6	9.4	574.7	7.7	10.3
12	2B	592.0	586.0	6.0	565.7	6.5	8.4
	2C	592.0	586.0	6.0	565.7	6.5	8.4
	3B	592.0	586.0	6.0	565.7	6.5	8.4
	3C	592.0	586.0	6.0	565.7	6.5	8.4
	4B	592.0	586.0	6.0	565.7	7.2	9.2
	4C	592.0	586.0	6.0	565.7	6.4	8.4
13	2B	583.0	574.4	8.6	554.7	7.4	9.9
	2C	583.0	574.4	8.6	554.7	7.4	9.9
	3B	583.0	574.4	8.6	554.7	7.4	9.9
	3C	583.0	574.4	8.6	554.7	7.4	9.9
	4B	583.0	574.4	8.6	554.7	8.6	10.6
	4C	583.0	574.4	8.6	554.7	7.5	9.5
14	2B	572.0	562.2	9.8	543.7	7.8	10.5
	2C	572.0	562.2	9.8	543.7	7.8	10.5
	4B	572.0	562.2	9.8	543.7	7.8	10.5
	4C	572.0	562.2	9.8	543.7	8.9	10.7
15	2B	561.0	548.0	13.0	527.7	8.8	12.0
	2C	561.0	548.0	13.0	527.7	8.8	12.0
	3B	561.0	548.0	13.0	527.7	8.8	12.0
	3C	561.0	548.0	13.0	527.7	10.1	14.2
16	2B	545.0	538.5	6.5	518.7	6.7	8.7
	2C	545.0	538.5	6.5	518.7	6.7	8.7
	3B	545.0	538.5	6.5	518.7	6.7	8.7
	3C	545.0	538.5	6.5	518.7	6.7	8.7
	4B	545.0	538.5	6.5	518.7	7.5	9.5
	4C	545.0	538.5	6.5	518.7	6.6	8.6
17	1C	536.0	532.0	4.0	510.7	8.7	9.9
	2B	536.0	532.0	4.0	510.7	5.7	7.0
	2C	536.0	532.0	4.0	510.7	5.7	7.0
	3B	536.0	532.0	4.0	510.7	5.7	7.0
	3C	536.0	532.0	4.0	510.7	5.7	7.0
	4B	536.0	532.0	4.0	510.7	6.0	8.0
	4C	536.0	532.0	4.0	510.7	5.4	7.4
18	2B	528.0	521.1	6.9	499.9	6.8	8.9
	2C	528.0	521.1	6.9	499.9	6.8	8.9
	3B	528.0	521.1	6.9	499.9	6.8	8.9
	3C	528.0	521.1	6.9	499.9	6.8	8.9

Lock Site	Lock Location & Type	50% Pool Elev.	50% Tail Elev.	50% Lift	Chamber Floor Elev.	50 % **Fill Time (minutes)**	50 % **Empty Time (minutes)**
	4B	528.0	521.1	6.9	499.9	7.7	8.7
	4C	528.0	521.1	6.9	499.9	6.8	8.8
19	3B	518.2	481.9	36.3	463.1	14.1	20.0
	3C	518.2	481.9	36.3	463.1	16.7	23.6
20	2B	478.7	473.4	5.3	452.9	6.2	7.9
	2C	478.7	473.4	5.3	452.9	6.2	7.9
	3B	478.7	473.4	5.3	452.9	6.2	7.9
	3C	478.7	473.4	5.3	452.9	6.8	9.3
	4B	478.7	473.4	5.3	452.9	6.8	8.8
	4C	478.7	473.4	5.3	452.9	6.0	8.0
21	2B	470.0	463.5	6.6	442.0	6.7	8.7
	2C	470.0	463.5	6.6	442.0	6.7	8.7
	3B	470.0	463.5	6.6	442.0	6.7	8.7
	3C	470.0	463.5	6.6	442.0	6.7	8.7
	4B	470.0	463.5	6.6	442.0	7.5	9.5
	4C	470.0	463.5	6.6	442.0	6.7	8.7
22	2B	459.5	452.0	7.5	430.5	7.0	9.3
	2C	459.5	452.0	7.5	430.5	7.0	9.3
	3B	459.5	452.0	7.5	430.5	7.0	9.3
	3C	459.5	452.0	7.5	430.5	7.9	11.0
	4B	459.5	452.0	7.5	430.5	7.0	9.3
	4C	459.5	452.0	7.5	430.5	7.9	9.4
24	2B	448.0	438.0	10.0	416.7	7.9	10.6
	2C	448.0	438.0	10.0	416.7	7.9	10.6
	3B	448.0	438.0	10.0	416.7	7.9	10.6
	3C	448.0	438.0	10.0	416.7	8.9	12.5
	4B	448.0	438.0	10.0	416.7	9.3	11.3
	4C	448.0	438.0	10.0	416.7	7.8	9.8
25	1C	434.0	423.5	10.5	401.7	13.7	14.2
	2B	434.0	423.5	10.5	401.7	8.0	10.9
	2C	434.0	423.5	10.5	401.7	8.0	10.9
	3B	434.0	423.5	10.5	401.7	8.0	10.9
	3C	434.0	423.5	10.5	401.7	8.0	10.9
	4B	434.0	423.5	10.5	401.7	9.5	11.5
	4C	434.0	423.5	10.5	401.7	8.3	10.3
Peoria	1C	440.0	434.0	6.0	411.7	10.5	11.7
	2B	440.0	434.0	6.0	411.7	6.5	8.4
	2C	440.0	434.0	6.0	411.7	6.5	8.4
LaGrange	1C	429.0	424.5	4.5	402.3	9.5	10.3
	2B	429.0	424.5	4.5	402.3	5.9	7.4
	2C	429.0	424.5	4.5	402.3	5.9	7.4

The average time for each lockage activity was entered into the spreadsheet and summed to yield the total lockage time. A spreadsheet was developed for up-bound fly lockages,

down-bound fly lockages, up-bound exchange lockages, down-bound exchanges, up-bound turn-backs, and down bound turn-backs. This was completed for both 600-foot and 1200-foot lockages, to make a total of 12 spreadsheets. The completed sheets are presented in Appendix B of this report.

References

1. Gerwick, Ben C., Inc., "Upper Mississippi River-Illinois Waterway System Navigation Study Innovative Lock Concept Review: 1200 foot Lock Capacity, Alternate Construction Techniques and Constructibility Review," Volumes I and II, Draft Report, 1994.

2. U.S. Army Corps of Engineers, Rock Island, St. Louis, and St. Paul Districts report, dated February 1996 (revised July 1996), subject: "UMR&IWW System Navigation Study, Interim Report, Large-Scale Measures of Reducing Traffic Congestion - Conceptual Lock Designs."

3. U.S. Army Corps of Engineers, EP-1110-1-14, "Report of the USACE Task Force on Design and Construction Innovations for Locks and Dams," dated 30 April 1994.

Appendix A: Site Adapted Cost Estimates

LOCK AND DAM NO. 25, LOCATION 2, TYPE B
(PILE-FOUNDED)

CCOUNT CODE	ITEM	QUANTITY	UNIT	UNIT PRICE ($'s)	AMOUNT ($1,000's)
01.	**LANDS AND DAMAGES**				
	REAL ESTATE	1	JOB	SUM	150
04.	**DAMS**				
	04 DAMS SUBTOTAL				0
05.	**LOCKS**				
	SITEWORK				
	MOBILIZATION	1	JOB	SUM	10,650
	DEMOLITION	1	JOB	SUM	1,910
	EXCAVATION	27,090	CY	4.5	122
	BACKFILL	22,000	CY	6.25	138
	WALL FILL	11,491	CY	10.00	115
	SCOUR PROTECTION	429	TN	20.00	9
	SCOUR STONE IN LOCK FLOOR	9,030	TN	25.00	226
	FOUNDATION/LOCK DEWATERING	1	JOB	SUM	3,000
	MARINE FACILITIES, TEMP. MOORING STR.	1	JOB	SUM	3,900
	CONCRETE				
	UNDERBASE GROUTING	5,297	CY	200	1,059
	CAST IN PLACE REINFORCED CONCRETE	38,916	CY	217	8,445
	PRECAST CONCRETE	8,990	CY	400	3,596
	TREMIE CONCRETE	5,651	CY	165	932
	POST TENSION STEEL	135,000	LB	2.5	338
	FURNISH AND SET LANDING PADS	74	EA	19000	1,406
	SET PRECAST WALL UNITS	28	EA	16000	448
	FLOAT IN AND SET FLOOR UNITS	26	EA	16000	416
	FLOAT IN AND SET MITER GATE SILL	1	JOB	SUM	140
	STEEL REINFORCEMENT	2,335,000	LB	0.75	1,751
	METALS				
	SHEET PILING	57,878	SF	21.52	1,246
	WALL UNIT BRACING	1	JOB	SUM	250
	FOUNDATION PILING AND TESTING	1	JOB	SUM	5,300
	STRUCTURAL STEEL (GATES, VALVES, TRASHRACKS, BU	1	JOB	SUM	11,613
	STRUCTURAL STEEL (MISCELLANEOUS - LADDERS, ETC.	1	JOB	SUM	3,040
	ELECTRICAL				
	ELECTRICAL SYSTEM	1	JOB	SUM	4,700
	INSTRUMENTATION	1	JOB	SUM	1,250
	MECHANICAL				
	GATE AND VALVE OPERATING MACHINERY	1	JOB	SUM	2,750
	MECHANICAL SYSTEMS	1	JOB	SUM	3,200
	MISCELLANEOUS	1	JOB	SUM	1,950
	05 LOCKS SUBTOTAL				73,899
05.60.	**GUIDEWALLS**				
	SITEWORK				
	EXCAVATION	118,490	CY	4.5	533
	BACKFILL	73,640	CY	10	736
	SCOUR PROTECTION	18,900	TON	15	284
	CONCRETE				
	42" DIAMETER PILES	4,293	LF	400	1,717
	CAST IN PLACE REINFORCED CONCRETE	1,570	CY	150	236
	PRECAST BEAMS	10,900	CY	500	5,450
	PRECAST BEAM SEATS	165	CY	1000	165
	TREMIE CONCRETE	130	CY	500	65
	PERMANENT CELL FILL (C0NCRETE)	15,218	CY	200	3,044
	GROUT FOR BEAMS	490	CY	1000	490
	STEEL REINFORCEMENT	1,840,000	LB	0.75	1,380
	GRAVEL FILL	29,979	CY	10	300
	METALS				
	SHEET PILING	188,548	SF	25.00	4,714
	FOUNDATION PILING		JOB	SUM	318
	POST TENSIONING	1,280	LF	30	38
	STRUCTURAL STEEL	1	JOB	SUM	4,060
	05.60 GUIDEWALLS SUBTOTAL				23,529
	PROJECT SUBTOTAL				97,578
	CONTINGENCIES 25%				24,394
	PROJECT SUBTOTAL WITH CONTINGENCIES				121,972
30.	**PLANNING, ENGINEERING, AND DESIGN (10%)**				12,200
31.	**CONSTRUCTION MANAGEMENT (10%)**				12,200
	PROJECT TOTAL				$ 146,372

TOTAL BASIC LOCK COST (O4., 05., 05.60.) WITH CONTINGENCIES, PED, & CM* **$ 146,000**

*(EXCLUDES REAL ESTATE, RELOCATION, AND CHANNEL WORK WHICH ARE MORE SITE-SPECIFIC.)

		QUANTITY CALCULATIONS									
	L/D 25 Location 2, Type B, Pile Founded							Sheet 1_ of 3____			
1	Remove existing sill down to										
	elev. 405.33	25	x	2	x	110	=	5,500.00	CF	203.70	CY
2	Remove existing 2' thick slab	95.25	x	2	x	110	=	20,955.00	CF	776.11	CY
3	Demolish existing guidewall, to										
	include timber crib and pile	502	x	30	x	53	=	798,180.00	CF	29,562.22	CY
4	Install sheet piling, PZ27	43.0	x	673	x	2	=	57,878.00	SF		
5	Excavation	6.3	x	172		675	=	731,430.00	CF	27,090.00	CY
6	Place scour stone	1.5	x	172	x	675	=	174,150.00	CF	6,450.00	CY
7	Place scour protection (riprap)	3	x	25	x	110	=	8,250.00	CF	305.56	CY
8	Install piling, HP 14 x 89										
	(54 ea per monolith @ 50' long										
	for 28 monoliths)	54	x	50	x	28	=	75,600.00	LF		
	Lockwall/floor connection										
9	HP14 x 117 stud w/welded ribs	23	x	2	=	46	EA				
	thixotropic grout @ HP studs	23.5	x	46	=	1,081.00	CF				
	thixotropic grout @ joints per ft	0.25	x	5	x	1296	=	1,620.00	CF		
10	Grout under base filling	2	x	650	x	110	=	143,000.00	CF	5,296.30	CY
11	Install piling, HP 14 x 89										
	(5 ea per floor unit @ 45' long										
	for 26 floor units	5	x	45	x	26	=	5,850.00	LF		
							=	26	EA		
12	Sand infill of floor units, large	((9.25' x 6.25' x2)+(19.75' x 6.25' x 4))x 510'					=	310,794.00	CF		
	" " " " " , small	((9.25' x 3' x 2)+(19.75' x 3' x 4)) x 66					=	19,305.00	CF		
								330,099.00	CF	12,225.89	CY
13	Concrete										
	riverward wall										
	-bottom lift (tremie)	5.5	x	23	x	603	=	76,279.50	CF		
	-2nd lift (reinforced)	4	x	28	x	603	=	67,536.00	CF		
	-3rd lift (reinforced)inside	13.5	x	7.75	x	603	=	63,088.88	CF		
	- " " " outside	13.5	x	7.75	x	603	=	63,088.88	CF		
	-4th lift (reinforced)	8.5	x	26	x	603	=	133,263.00	CF		
	-5th lift (reinforced)	5.0	x	28	x	603	=	84,420.00	CF		
	-6th lift (reinforced)outside	5.50	x	9	x	603	=	29,848.50	CF		
	- " " " inside	5.50	x	9	x	603	=	29,848.50	CF		
	-7th lift (reinforced)outside	10.0	x	9	x	603	=	54,270.00	CF		
								601,643.25		22,283.08	CY
14	Concrete										
	landward wall										
	-bottom lift (tremie)	5.5	x	23	x	603	=	76,279.50	CF		
	-2nd lift (reinforced)	4	x	28	x	603	=	67,536.00	CF		
	-3rd lift (reinforced)inside	13.5	x	7.75	x	603	=	63,088.88	CF		
	- " " " outside	13.5	x	7.75	x	603	=	63,088.88	CF		
	-4th lift (reinforced)	8.5	x	26	x	603	=	133,263.00	CF		
	-5th lift (reinforced)	5.0	x	28	x	603	=	84,420.00	CF		
	-6th lift (reinforced)outside	5.50	x	9	x	603	=	29,848.50	CF		
	- " " " inside	5.50	x	9	x	603	=	29,848.50	CF		
	-7th lift (reinforced)outside	10.0	x	9	x	603	=	54,270.00	CF		
								601,643.25		22,283.08	CY
	Total Concrete									44,566.17	CY
											Ld252bpf

LOCK AND DAM NO. 25, LOCATION 2, TYPE C
(PILE-FOUNDED)

CCOUNT CODE	ITEM	QUANTITY	UNIT	UNIT PRICE ($'s)	AMOUNT ($1,000's)
01.	**LANDS AND DAMAGES**				
	REAL ESTATE	1	JOB	SUM	150
04.	**DAMS**				
	04 DAMS SUBTOTAL				0
05.	**LOCKS**				
	SITEWORK				
	MOBILIZATION	1	JOB	SUM	10,650
	DEMOLITION	1	JOB	SUM	1,910
	EXCAVATION	57,828	CY	4.5	260
	BACKFILL	19,700	CY	10.00	197
	SCOUR PROTECTION	2,000	TN	15.00	30
	SCOUR STONE IN LOCK FLOOR	16,860	TN	15.00	253
	GRAVEL FILTER IN LOCK FLOOR	16,090	TN	20.00	322
	FOUNDATION/LOCK DEWATERING	1	JOB	SUM	3,000
	MARINE FACILITIES, TEMP. MOORING STR.	1	JOB	SUM	3,900
	CONCRETE				
	STRUCTURAL GROUTING	700	CY	200	140
	CAST IN PLACE REINFORCED CONCRETE	31,569	CY	217	6,850
	CAST IN PLACE CONNECTIONS	200	CY	725	145
	PRECAST CONCRETE	9,258	CY	400	3,703
	TREMIE CONCRETE, BASE .	3,574	CY	165	590
	PRECAST FLOOR PANELS	8,210	CY	286	2,348
	POST TENSION STEEL	185,300	LB	2.5	463
	FURNISH AND SET LANDING PADS	74	EA	19000	1,406
	SET PRECAST WALL UNITS	28	EA	16000	448
	FLOAT IN AND SET MITER GATE SILL	1	JOB	SUM	140
	STEEL REINFORCEMENT	1,895,000	LB	0.75	1,421
	METALS				
	SHEET PILING	47,110	SF	21.52	1,014
	WALL UNIT BRACING	1	JOB	SUM	250
	FOUNDATION PILING AND TESTING	1	JOB	SUM	3,487
	STRUCTURAL STEEL (GATES, VALVES, TRASHRACKS, B	1	JOB	SUM	11,613
	STRUCTURAL STEEL (MISCELLANEOUS - LADDERS, ET	1	JOB	SUM	3,040
	ELECTRICAL				
	ELECTRICAL SYSTEM	1	JOB	SUM	4,700
	INSTRUMENTATION	1	JOB	SUM	1,250
	MECHANICAL				
	GATE AND VALVE OPERATING MACHINERY	1	JOB	SUM	2,750
	MECHANICAL SYSTEMS	1	JOB	SUM	3,200
	MISCELLANEOUS	1	JOB	SUM	1,950
	05 LOCKS SUBTOTAL				71,431
05.60.	**GUIDEWALLS**				
	SITEWORK				
	EXCAVATION	118,490	CY	4.5	533
	BACKFILL	73,640	CY	10	736
	SCOUR PROTECTION	18,900	TON	15	284
	CONCRETE				
	42" DIAMETER PILES	4,293	LF	400	1,717
	CAST IN PLACE REINFORCED CONCRETE	1,570	CY	150	236
	PRECAST BEAMS	10,900	CY	500	5,450
	PRECAST BEAM SEATS	165	CY	1000	165
	TREMIE CONCRETE	130	CY	500	65
	PERMANENT CELL FILL (C0NCRETE)	14,840	CY	200	2,968
	GROUT FOR BEAMS	490	CY	1000	490
	STEEL REINFORCEMENT	1,840,000	LB	0.75	1,380
	GRAVEL FILL	29,215	CY	10	292
	METALS				
	SHEET PILING	188,548	SF	25.00	4,714
	FOUNDATION PILING	1	JOB	SUM	318
	POST TENSIONING	1,280	LF	30	38
	STRUCTURAL STEEL	1	JOB	SUM	4,060
	05.60 GUIDEWALLS SUBTOTAL				23,446
	PROJECT SUBTOTAL				95,027
	CONTINGENCIES 25%				23,773
	PROJECT SUBTOTAL WITH CONTINGENCIES				118,800
30.	**PLANNING, ENGINEERING, AND DESIGN (10%)**				11,880
31.	**CONSTRUCTION MANAGEMENT (10%)**				11,880
	PROJECT TOTAL				$ 142,560

TOTAL BASIC LOCK COST (O4., 05., 05.60.) WITH CONTINGENCIES, PED, & CM*	**$ 142,600**

*(EXCLUDES REAL ESTATE, RELOCATION, AND CHANNEL WORK WHICH ARE MORE SITE-SPECIFIC.)

		QUANTITY CALCULATIONS									
	L/D 25, Location 2, Type C, Pile Founded							Sheet 1_ of 3_			
1	Remove existing sill down to										
	elev. 577.83	25	x	2	x	110	=	5,500.00	CF	203.70	CY
2	Remove existing 2' thick slab	95.25	x	2	x	110	=	20,955.00	CF	776.11	CY
3	Demolish existing guidewall, to	502	x	30	x	53	=	798,180.00	CF	29,562.22	CY
	include timber crib and pile										
4	Install sheet piling, PZ27	35	x	673	x	2	=	47,110.00	SF		
5	Place scour stone (under walls)	1.5	x	60	x	600	=	54,000.00	CF	2,000.00	CY
6	Excavation	23.5	x	110	x	604	=	1,561,340.00	CF	57,827.41	CY
7	Install piling, HP 14 x 89										
	(24 ea per monolith @50' long										
	for 28 monoliths)	24	x	50	x	28	=	33,600.00	LF		
8	Steel footing box(1/2"steel plate)										
	riverward wall										
	20.42 lb x [(6'x3'x2)+(4'x3'x2)]=1,225 LB @ 30 locations							36,750.00	LB		
	landward wall										
	20.42 lb x [(6'x3'x2)+(4'x3'x2)]=1,225 LB @ 30 location							36,750.00	LB		
								73,500.00	LB		
9	Install piling, HP 14 x 89								or	2,722.22	TN
	for chamber floor paving blocks										
	(7 ea per joint @ 50' for 14 ea										
	joints)	48.0	x	7	x	14	=	4,704.00	LF		
10	Scour stone, (removed prior to										
	floor construction)	3	x	110	x	580	=	191,400.00	CF	7,088.89	CY
11	Filter layer	2	x	110	x	580	=	127,600.00	CF	4,725.93	CY
12	Filter gravel	2	x	110	x	580	=	127,600.00	CF	4,725.93	CY
13	Paving blocks (3'x30'x14')										
	1,260cf @ 8/row x 18 rows	1,260	x	8	x	18	=	181,440.00	CF	6,720.00	CY
14	Structural steel (per cell unit)										
	- W18 x 86 waler	86	x	154	=	13,244.00					
	- W18 x 86 brace	86	x	22	=	1,892.00					
	- C12 x 25 diagonal brace	25	x	232	=	5,800.00					
	(There are 30 cell units, 15 in each wall)					20,936.00	x	30	=	628,080.00	LB
									or	314.04	TN
15	Precast liner										
	riverward wall	29.0	x	603	x	1	=	17,487.00	CF		
	landward wall	29.0	x	603	x	1	=	17,487.00	CF		
								34,974.00	CF		
									or	1,295.33	CY
16	Precast concrete miter gate sill										
	and wall monoliths										
	Taken from quantity calc's from St. Paul District's Microstation analysis										
						- Slab volume			=	1,434.50	CY
						- Wall volume			=	771.32	CY
						- Concrete strut volume			=	17.25	CY
	Total Precast Concrete Volume for Miter Gate Sill & Wall Monoliths								=	2,223.07	CY
										Ld252cpf	

LOCK AND DAM NO. 25, LOCATION 2, TYPE R
1200' LOCK ALTERNATIVE (SAND-FOUNDED)

	New Lock			
ITEM	**QUANTITY**	**UNIT**	**NIT PRICE ($'s)**	**AMOUNT ($1,000's)**
LANDS AND DAMAGES				
REAL ESTATE	1	JOB	SUM	150
DAMS				
04 DAMS SUBTOTAL				0
LOCKS				
SITEWORK				
MOBILIZATION	1	JOB	SUM	8,650
DEMOLITION	1	JOB	SUM	500
EXCAVATION	16,600	CY	4.5	75
SCOUR PROTECTION	15,625	TN	20	313
FOUNDATION/LOCK DEWATERING	1	JOB	SUM	3,000
MARINE FACILITIES, TEMP MOORING STRUCTU	1	JOB	SUM	950
CONCRETE				
UNDERBASE GROUTING	2,200	CY	200	440
CAST IN PLACE REINFORCED CONCRETE	12,568	CY	280	3,519
LIGHTWEIGHT CONCRETE	6,030	CY	325	1,960
PRECAST CONCRETE	7,015	CY	400	2,806
TREMIE CONCRETE	9,178	CY	165	1,514
STONE FILL FOR IWALL CELLS	47,535	TN	20	951
GROUT FOR STONE FILLED CELLS	5,212	CY	200	1,042
SAND FILL FOR LANDWALL CELLS	23,300	CY	10.00	233
FURNISH AND SET LANDING PADS	6	EA	19000	114
FLOAT IN AND SET MITER GATE SILL	1	JOB	SUM	140
36" DIA PIPE PILES, QTY 56 PILES	4,200	LF	350	1,470
SET PRECAST WALL PANELS	48	EA	8000	384
SET PRECAST BEAMS	50	EA	3000	150
ARTICULATED CONCRETE MAT FOR FLOOR	70,000	SF	10	700
BEDDING UNDER FLOOR MAT	7,000	TN	20	140
CONCRETE REMOVAL				
METALS				
RIVER WALL SHEET PILING (PS-31)	114,282	SF	22.04	2,519
STAY IN PLACE TEMPLATES	14	EA	50,000	700
LANDWALL SHEET PILING (PS-31)	137,295	SF	19.64	2,696
Z-PILE CRADLE FOR FOAT-IN MONOLITH	29,700	SF	21.74	646
FOUNDATION PILING AND TESTING	1	JOB	SUM	1,000
H-PILING HP 12X53	5,472	VLF	33.50	183
STRUCTURAL STEEL (GATES, VALVES, TRASHRACKS)	1	JOB	SUM	11,613
STRUCTURAL STEEL (MISCELLANEOUS - LADD	1	JOB	SUM	3,040
ROCK BOLTS & SUPPORTS FOR PRECAST BEA	140	EA	350	49
FASTNERS FOR PRECAST PANELS	336	EA	100	34
ELECTRICAL				
ELECTRICAL SYSTEM	1	JOB	SUM	4,700
INSTRUMENTATION	1	JOB	SUM	1,250
MECHANICAL				
GATE AND VALVE OPERATING MACHINERY	1	JOB	SUM	2,750
MECHANICAL SYSTEMS	1	JOB	SUM	3,200

LOCK AND DAM NO. 25, LOCATION 2, TYPE R
1200' LOCK ALTERNATIVE (SAND-FOUNDED)

MISCELLANEOUS	1	JOB	SUM	1,950
05 LOCKS SUBTOTAL				65,380
GUIDEWALLS				
SITEWORK				
EXCAVATION	118490	CY	4.50	533
BACKFILL	73640	CY	10	736
SCOUR PROTECTION	18900	TN	20	378
CONCRETE				
48" DIAMETER PILES	1068	VLF	370	395
CAST IN PLACE CONCRETE	195	CY	180	35
PRESTRESSED BOX BEAMS	1	JOB	SUM	5,067
PRECAST BEAM SEATS	6	EA	22,500	135
TREMIE CONCRETE	90	CY	165	15
PERMANENT CELL FILL(CONCRETE)	3,302	CY	200	660
GROUT AND BLADDERS	5,328	CF	29.40	157
STEEL REINFORCEMENT	155,000	LB	1	155
STONE FILL FOR WALL CELLS	8,975	CY	20	180
METALS				
STEEL SHEET PILING FOR CELLS (PS-31)	62,040	SF	22.04	1,367
STEEL SHEET PILING FOR SKIRT	29,160	SF	18.35	535
STEEL H-PILING (FOR 57 FT DIA CELL)	4,080	VLF	52.50	214
ANCHOR BARS FOR BEAMS	2,160	LF	87.60	189
WALL ARMOR (14 STRIPS)	369,600	LB	4.20	1,552
STEEL RUB PLATE AND ACCESSORIES	63,600	LB	6.00	382
LADDERS AND MISC METALS	100,000	LB	3.00	300
HANDRAILLING (ALUM.)	1,400	LF	125.40	176
CHECKPOST	30	EA	1,546	46
ACCESS HATCHES	1	JOB	SUM	33
ELECTRICAL				
ELECTRICAL SYSTEM	1	JOB	SUM	78
05.60 GUIDEWALLS SUBTOTAL				13,319
CHANNEL WORK	1	JOB	SUM	680
PROJECT SUBTOTAL				79,529
CONTINGENCIES 25%				19,882
PROJECT SUBTOTAL WITH CONTINGENCIES				99,412
PLANNING, ENGINEERING, AND DESIGN (10%)				9,941
CONSTRUCTION MANAGEMENT (10%)				9,941
PROJECT TOTAL				$ 119,294
SIC LOCK COST (O4., 05., 05.60.) WITH CONTINGENCIES, PED, & CM*				**$ 119,000**

LOCK AND DAM NO. 25, LOCATION 3, TYPE CR
1200' LOCK ALTERNATIVE (PILE FOUNDED)

CCOUNT CODE	ITEM	L/D 25	QUANTITY	UNIT	NIT PRICE ($'s)	AMOUNT ($1,000's)
01.	LANDS AND DAMAGES					
		REAL ESTATE	1	JOB	SUM	150
04.	DAMS					
		REMOVAL OF EXISTING STRUCTURES	1	JOB	SUM	150
	04 DAMS SUBTOTAL					150
05.	LOCKS					
		SITEWORK				
		MOBILIZATION	1	JOB	SUM	10,650
		DEMOLITION	1	JOB	SUM	1,790
		EXCAVATION	48,960	CY	6.25	306
		FOUNDATION FILL AT SCOUR HOLE	125,000	CY	18.75	2,344
		WALL FILL	15,760	CY	10.00	158
		CAPSTONE	52,660	TN	25.00	1,317
		RIPRAP	33,380	TN	20.00	668
		LEVELING STONE IN LOCK FLOOR	4,580	TN	15.00	69
		GRAVEL FILTER IN LOCK FLOOR	16,606	TN	15.00	249
		GEOTEXTILE	13,740	SY	6.00	82
		FOUNDATION/LOCK DEWATERING	1	JOB	SUM	3,000
		MARINE FACILITIES, TEMP. MOORING STR.	1	JOB	SUM	3,900
		CONCRETE				
		STRUCTURAL GROUTING	450	CY	200	90
		CAST IN PLACE REINFORCED CONCRETE	56,208	CY	217	12,197
		CAST IN PLACE CONNECTIONS	480	CY	725	348
		PRECAST CONCRETE	2,231	CY	400	892
		TREMIE CONCRETE	23,163	CY	165	3,822
		PRECAST FLOOR PAVERS AND STRUTS	8,111	CY	286	2,320
		SET PRECAST FLOOR BEAMS	16	EA	16000	256
		SET FLOOR PANELS	64	EA	10000	640
		STEEL REINFORCEMENT	5,612,830	LB	0.75	4,210
		METALS				
		SHEET PILING	270,177	SF	35.80	9,672
		SHEET PILE BRACING	1	JOB	SUM	350
		FOUNDATION PILING AND TESTING (HP PILES)	77,763	LF	39.75	3,091
		FOUNDATION PILING AND TESTING (48" PIPE PILES)	28,798	LF	180.00	5,184
		FOUNDATION PILING AND TESTING (PRECAST PILES)	4,346	LF	16.00	70
		STRUCTURAL STEEL (GATES, VALVES, TRASHRACKS, BULKHEADS)	1	JOB	SUM	11,613
		STRUCTURAL STEEL (MISCELLANEOUS - LADDERS, ETC.)	1	JOB	SUM	3,040
		ELECTRICAL				
		ELECTRICAL SYSTEM	1	JOB	SUM	4,700
		INSTRUMENTATION	1	JOB	SUM	1,250
		MECHANICAL				
		GATE AND VALVE OPERATING MACHINERY	1	JOB	SUM	2,750
		MECHANICAL SYSTEMS	1	JOB	SUM	3,200
		MISCELLANEOUS	1	JOB	SUM	1,950
	05 LOCKS SUBTOTAL					96,176
05.60.		GUIDEWALLS				
		SITEWORK				
		EXCAVATION	118,490	CY	4.5	533
		BACKFILL	73,640	CY	10	736
		SCOUR PROTECTION	18,900	TON	15	284
		CONCRETE				
		CAST IN PLACE REINFORCED CONCRETE	1,570	CY	150	236
		PRECAST BEAMS	6,000	LF	2125	12,750
		PRECAST BEAM SEATS	165	CY	1000	165
		GROUT FOR BEAMS	490	CY	1000	490
		METALS				
		STEEL CYLINDER FILLED WITH CONCRETE	16	EA	560000	8,960
		NOSE STEEL CYLINDERS FILLED WITH CONCRETE	2	EA	900000	1,800
		Z-PILING	21,000	SF	21.52	452
		FOUNDATION PILING	72,000	LF	52.50	3,780
		MISC METAL (HAND RAIL, LADDERES, CHECKPOST, ETC.)	1	JOB	SUM	560
	05.60 GUIDEWALLS SUBTOTAL					30,746
09.	CHANNEL WORK		1	JOB	SUM	680
	PROJECT SUBTOTAL					127,902
	CONTINGENCIES 25%					31,975
	PROJECT SUBTOTAL WITH CONTINGENCIES					159,877
30.	PLANNING, ENGINEERING, AND DESIGN (10%)					15,988
31.	CONSTRUCTION MANAGEMENT (10%)					15,988
	PROJECT TOTAL					$ 191,852

TOTAL BASIC LOCK COST (O4., 05., 05.60.) WITH CONTINGENCIES, PED, & CM* **$ 190,607**

*(EXCLUDES REAL ESTATE, RELOCATION, AND CHANNEL WORK WHICH ARE MORE SITE-SPECIFIC.)

LOCK AND DAM 24 lOCATION 2, TYPE R
1200' LOCK ALTERNATIVE (ROCK-FOUNDED)

ACCOUNT CODE	ITEM	New Lock QUANTITY	UNIT	NIT PRICE ($'s)	AMOUNT ($1,000's)
01.	**LANDS AND DAMAGES**				
	REAL ESTATE	1	JOB	SUM	150
04.	**DAMS**				
	04 DAMS SUBTOTAL				0
05.	**LOCKS**				
	SITEWORK				
	MOBILIZATION	1	JOB	SUM	8,000
	DEMOLITION	1	JOB	SUM	500
	ROCK EXCAVATION	16,494	CY	45	742
	OVERBURDEN EXCAVATION	40,900	CY	4.5	184
	BACKFILL	16,700	CY	10	167
	LOCK DEWATERING	1	JOB	SUM	1,250
	MARINE FACILITIES, TEMP MOORING STRUCT	1	JOB	SUM	3,900
	CONCRETE				
	UNDERBASE GROUTING	460	CY	200	92
	CAST IN PLACE REINFORCED CONCRETE	22,240	CY	280	6,227
	PRECAST CONCRETE	6,023	CY	400	2,409
	GATE MONOLITH TREMIE CONCRETE	1,980	CY	210	416
	CONCRETE CELL FILL	35,412	CY	200	7,082
	FURNISH AND SET LANDING PADS	16	EA	19000	304
	FLOAT IN AND SET MITER GATE SILL	4	EA	100000	400
	SET PRECAST WALL PANELS	48	EA	8000	384
	SET PRECAST BEAMS	50	EA	3000	150
	ANCHORS FOR LANDWALL	1,875	EA	50	94
	METALS				
	RIVER WALL SHEET PILING (PS-31)	120,240	SF	22.04	2,650
	STAY IN PLACE TEMPLATES	20	EA	50,000	1,000
	STRUCTURAL STEEL (GATES, VALVES, TRASH	1	JOB	SUM	11,613
	STRUCTURAL STEEL (MISCELLANEOUS - LADD	1	JOB	SUM	3,040
	ROCK BOLTS & SUPPORTS FOR PRECAST BE	140	EA	350	49
	FASTNERS FOR PRECAST PANELS	336	EA	100	34
	HIGH CAPACITY ROCK ANCHORS	53	EA	13050	692
	ELECTRICAL				
	ELECTRICAL SYSTEM	1	JOB	SUM	4,700
	MECHANICAL				
	GATE AND VALVE OPERATING MACHINERY	1	JOB	SUM	2,750
	MECHANICAL SYSTEMS	1	JOB	SUM	3,200
	MISCELLANEOUS	1	JOB	SUM	1,950
	05 LOCKS SUBTOTAL				63,979
05.60.	**GUIDEWALLS**				
	SITEWORK				
	ROCK EXCAVATION	210	CY	45.00	9
	OVERBURDEN EXCAVATION	3060	CY	4.50	14
	CONCRETE				

LOCK AND DAM 24 lOCATION 2, TYPE R

1200' LOCK ALTERNATIVE (ROCK-FOUNDED)

	CAST IN PLACE REINFORCED CONCRETE	500	CY	280	140
	PRECAST CONCRETE BEAMS (PRESTRESSED	2,025	LF	2,000	4,050
	TREMIE CONCRETE (WITH REINFORCEMENT)	3,521	CY	210	739
	METALS				
	STEEL CYLINDERS FOR CELLS (FILLED W CON	5	EA	630,000	3,150
	NOSE STELL CYLINDER (FILLED WITH CONCR	1	EA	1,260,000	1,260
	ANCHOR BARS FOR BEAMS	2,010	LF	87.60	176
	WALL ARMOR (14 STRIPS)	517,440	LB	4.20	2,173
	STEEL RUB PLATE AND ACCESSORIES	89,040	LB	6.00	534
	LADDERS AND MISC METALS	100,000	LB	3.00	300
	HANDRAILLING (ALUM.)	1,400	LF	125.40	176
	CHECKPOST	30	EA	1,546	46
	ACCESS HATCH	1	JOB	SUM	33
	ELECTRICAL SYSTEM	1	JOB	SUM	78
	MISCELLANEOUS				
	05.60 GUIDEWALLS SUBTOTAL				12,879
	PROJECT SUBTOTAL				77,008
	CONTINGENCIES 25%				19,252
	PROJECT SUBTOTAL WITH CONTINGENCIES				96,260
30.	**PLANNING, ENGINEERING, AND DESIGN (10%)**				9,626
31.	**CONSTRUCTION MANAGEMENT (10%)**				9,626
	PROJECT TOTAL				$ 115,512

LOCK AND DAM NO. 24, LOCATION 3
1200 FT LOCK ALTERNATIVE (PILE FOUNDED)

ACCOUNT CODE	ITEM	TYPE A	TYPE B ($1,000's)	TYPE C ($1,000's)
01.	**LANDS AND DAMAGES**			
	REAL ESTATE		21	21
04.	**DAMS**			
	REMOVAL OF EXISTING STRUCTURES		0	0
	04 DAMS SUBTOTAL		0	0
05.	**LOCKS**			
	SITEWORK			
	MOBILIZATION		8,000	8,000
	DEMOLITION	NOT FEASIBLE	1,910	1,910
	EXCAVATION		405	405
	BACKFILL		41	41
	SCOUR PROTECTION		668	668
	FOUNDATION DEWATERING		3,000	3,000
	LEVELING STONE		93	93
	SAND FILTER		74	74
	STONE FILL FILTER		180	180
	REMOVAL OF EXISTING STRUCTURES		1,301	1,301
	MARINE FACILITIES AND SPECIAL COSTS		3,900	3,900
	CONCRETE			
	CAST IN PLACE REINFORCED CONCRETE		12,953	12,269
	REPLACE EXISTING I-WALL CONCRETE		1,000	1,000
	CAST IN PLACE CONNECTIONS		699	699
	PRECAST CONCRETE WALLS, STRUTS, PANELS, FLOOR SLABS		10,420	10,420
	TREMIE CONCRETE		2,251	2,251
	FURNISH AND SET LANDING PADS		1,712	1,712
	SET PRECAST WALL UNITS		600	600
	SET FLOOR PANELS AND STRUTS		900	900
	STEEL REINFORCEMENT		3,737	3,737
	METALS			
	SHEET PILING		1,741	1,741
	WALL UNIT BRACING		250	250
	FOUNDATION PILING AND TESTING		3,340	3,340
	STRUCTURAL STEEL (GATES, VALVES, TRASHRACKS, BULKHEADS)		11,613	11,613
	STRUCTURAL STEEL (MISCELLANEOUS - LADDERS, ETC.)		3,040	3,040
	ELECTRICAL			
	REHAB OF EXISTING I-WALL		236	236
	ELECTRICAL SYSTEM		4,700	4,700
	INSTRUMENTATION		1,250	1,250
	MECHANICAL			
	GATE AND VALVE OPERATING MACHINERY		2,750	2,750
	MECHANICAL SYSTEMS		3,200	3,200
	MISCELLANEOUS		1,950	1,950
	05 LOCKS SUBTOTAL		87,914	87,230
05.60.	**GUIDEWALLS**			
	EXTEND EXISTING DOWNSTREAM GUIDEWALL		12,000	7,500
	SITEWORK			
	EXCAVATION		554	554
	SCOUR PROTECTION		2,333	2,333
	CONCRETE			
	42" DIAMETER PILES		1,165	1,165
	CAST IN PLACE REINFORCED CONCRETE		384	384
	PRECAST BEAMS		6,930	6,930
	PRECAST BEAM SEATS		210	210
	TREMIE CONCRETE		84	84
	PERMANENT CELL FILL (C0NCRETE)		1,777	1,777
	GROUT FOR BEAMS		622	622
	STEEL REINFORCEMENT		1,753	1,753
	GRAVEL FILL		420	420
	METALS			
	SHEET PILING		8,534	8,534
	FOUNDATION PILING		129	129
	POST TENSIONING		49	49
	STRUCTURAL STEEL		5,163	5,163
	05.60 GUIDEWALLS SUBTOTAL		42,107	37,607
	PROJECT SUBTOTAL		**$130,042**	**$124,858**
	CONTINGENCIES 25%		32,511	31,215
	PROJECT SUBTOTAL WITH CONTINGENCIES		**$162,553**	**$156,073**
30.	**PLANNING, ENGINEERING, AND DESIGN 10%**		16,255	15,607
31.	**CONSTRUCTION MANAGEMENT 10%**		16,255	15,607
	PROJECT TOTAL		**$195,063**	**$187,287**

LOCK AND DAM NO. 24, LOCATION 4
1200 FT LOCK ALTERNATIVE (PILE FOUNDED)

ACCOUNT CODE	ITEM	TYPE A	TYPE B ($1,000's)	TYPE C ($1,000's)
01.	**LANDS AND DAMAGES**			
	REAL ESTATE		21	21
04.	**DAMS**			
	REMOVAL OF EXISTING STRUCTURES		774	774
	TAINTER GATE IN AUXILIARY GATE BAY		10,000	10,000
	04 DAMS SUBTOTAL		10,774	10,774
05.	**LOCKS**			
	SITEWORK			
	MOBILIZATION		8,000	8,000
	EXCAVATION		1,273	909
	BACKFILL		995	610
	SCOUR PROTECTION	NOT FEASIBLE	2,590	1,958
	FOUNDATION DEWATERING		560	8,560
	COFFERDAM REMOVAL		84	84
	RIP RAP		347	334
	CAPSTONE		932	867
	GEOTEXTILE		67	61
	STONE FILL		167	167
	REMOVAL OF EXISTING STRUCTURES		971	971
	MARINE FACILITIES AND SPECIAL COSTS		5,675	2,175
	CONCRETE			
	STRUCTURAL GROUTING		5,400	5,400
	CAST IN PLACE REINFORCED CONCRETE		10,488	10,418
	CHAMBER WALLS - CAST IN PLACE		4,634	
	CAST IN PLACE CONNECTIONS		120	120
	PRECAST CONCRETE CHAMBER AND APPROACH WALLS, FLOOR		8,024	6,295
	TREMIE CONCRETE, BASE		6,239	3,267
	TREMIE CONCRETE, WALL		4,445	780
	POST TENSIONING		230	230
	FURNISH AND SET LANDING PADS		456	
	SET PRECAST WALL UNITS		1,408	
	FLOAT IN AND SET FLOOR UNITS		541	
	STEEL REINFORCEMENT		7,841	8,388
	STEEL CULVERT PIPE		3,487	
	CELL FILL, GRAVEL			1,401
	STONE IN CHAMBER			870
	CONCRETE CELL CAPS			972
	METALS			
	SHEET PILING		4,699	19,645
	SHEET PILE BRACING		620	620
	FOUNDATION PILING AND TESTING		5,815	1,923
	STRUCTURAL STEEL (GATES, VALVES, TRASHRACKS, BULKHEADS)		14,588	14,588
	STRUCTURAL STEEL (MISCELLANEOUS - LADDERS, ETC.)		3,728	3,189
	ELECTRICAL			
	ELECTRICAL SYSTEM		4,700	4,700
	INSTRUMENTATION		1,250	1,250
	MECHANICAL			
	GATE AND VALVE OPERATING MACHINERY		9,166	9,166
	MECHANICAL SYSTEMS		3,200	3,200
	MISCELLANEOUS		2,060	2,060
	05 LOCKS SUBTOTAL		124,800	123,178
05.60.	**GUIDEWALLS**			
	SITEWORK			
	EXCAVATION		635	635
	BACKFILL		205	205
	SCOUR PROTECTION		2,965	2,965
	CONCRETE			
	42" DIAMETER PILES		2,035	2,035
	CAST IN PLACE REINFORCED CONCRETE		384	384
	PRECAST BEAMS		6,930	6,930
	PRECAST BEAM SEATS		210	210
	TREMIE CONCRETE		84	84
	PERMANENT CELL FILL (C0NCRETE)		1,664	1,664
	GROUT FOR BEAMS		611	622
	STEEL REINFORCEMENT		1,473	1,473
	GRAVEL FILL		420	420
	METALS			
	SHEET PILING		9,681	9,681
	FOUNDATION PILING		404	404
	POST TENSIONING		487	487
	STRUCTURAL STEEL		5,079	5,079
	05.60 GUIDEWALLS SUBTOTAL		33,267	33,278
	PROJECT SUBTOTAL		**$168,862**	**$167,251**
	CONTINGENCIES 25%		42,216	41,813
	PROJECT SUBTOTAL WITH CONTINGENCIES		**$211,078**	**$209,064**
30.	**PLANNING, ENGINEERING, AND DESIGN 10%**		21,108	20,906
31.	**CONSTRUCTION MANAGEMENT 10%**		21,108	20,906
	PROJECT TOTAL		**$253,293**	**$250,877**

LOCK AND DAM NO. 22, LOCATION 2, TYPE B
1200' LOCK ALTERNATIVE (ROCK-FOUNDED)

ACCOUNT CODE	ITEM	QUANTITY	UNIT	UNIT PRICE ($'s)	AMOUNT ($1,000's)
01.	**LANDS AND DAMAGES**				
	REAL ESTATE	1	JOB	SUM	20
04.	**DAMS**				
	04 DAMS SUBTOTAL				0
05.	**LOCKS**				
	SITEWORK				
	MOBILIZATION	1	JOB	SUM	8,000
	DEMOLITION	1	JOB	SUM	1,117
	ROCK EXCAVATION	28,331	CY	45	1,275
	LOCK DEWATERING	1	JOB	SUM	1,250
	COFFERDAM REMOVAL	1	JOB	SUM	81
	MARINE FACILITIES, TEMP MOORING STRUCTURE	1	JOB	SUM	3,900
	CONCRETE				
	CAST IN PLACE REINFORCED CONCRETE	27,043	CY	217	5,868
	PRECAST CONCRETE CHAMBER AND APPROACH WALLS, FLOOR	11,110	CY	400	4,444
	TREMIE CONCRETE	9,898	CY	165	1,633
	PRESTRESSING/POST TENSION STEEL	1,110,000	LB	2.5	2,775
	FURNISH AND SET LANDING PADS	74	EA	19000	1,406
	SET PRECAST WALL UNITS	56	EA	16000	896
	FLOAT IN AND SET MITER GATE SILL	1	EA	140000	140
	STEEL REINFORCEMENT	1,622,600	LB	0.75	1,217
	METALS				
	SHEET PILING	1	JOB	SUM	220
	STRUCTURAL STEEL (GATES, VALVES, TRASHRACKS)	1	JOB	SUM	3,250
	STRUCTURAL STEEL (MISCELLANEOUS - LADDERS, ETC.	1	JOB	SUM	3,040
	ELECTRICAL				
	ELECTRICAL SYSTEM	1	JOB	SUM	4,700
	MECHANICAL				
	GATE AND VALVE OPERATING MACHINERY	1	JOB	SUM	2,750
	MECHANICAL SYSTEMS	1	JOB	SUM	3,200
	MISCELLANEOUS	1	JOB	SUM	1,950
	05 LOCKS SUBTOTAL				53,112
05.60.	**GUIDEWALLS**				
	CONCRETE				
	CAST IN PLACE REINFORCED CONCRETE	8,953	CY	280.00	2,507
	PRECAST CONCRETE BEAMS (PRESTRESSED)	4,665	LF	1,170.00	5,458
	PRECAST CONCRETE (W/REINFORCEMENT)	2,107	CY	400.00	843
	TREMIE CONCRETE (WITH REINFORCEMENT)	1,709	CY	210.00	359
	GRAVEL FILL	28,131	CY	15.00	422
	METALS				
	SHEETPILING FOR CELLS (PS31)	114,525	SF	25.00	2,863
	SHEETPILE CUTOFF WALL (PZ35)	30,510	SF	30.00	915
	SHEETPILE RETAINING WALL (PZ40)	28,350	SF	30.00	851
	STRUCTURAL STEEL	1	JOB	SUM	3,811
	05.60 GUIDEWALLS SUBTOTAL				18,028
09.	**CHANNEL WORK**	1	JOB	SUM	4,800
	PROJECT SUBTOTAL				75,961
	CONTINGENCIES 25%				18,990
	PROJECT SUBTOTAL WITH CONTINGENCIES				94,951
30.	**PLANNING, ENGINEERING, AND DESIGN (10%)**				9,500
31.	**CONSTRUCTION MANAGEMENT (10%)**				9,500
	PROJECT TOTAL				113,951

TOTAL BASIC LOCK COST (O4., 05., 05.60.) WITH CONTINGENCIES, PED, & CM* **$ 114,000**

*(EXCLUDES REAL ESTATE, RELOCATION, AND CHANNEL WORK WHICH ARE MORE SITE-SPECIFIC.)

		QUANTITY CALCULATIONS									
		L/D 22 Location 2, Type B						Sheet 1_ of 4_			
1	Rock excavation										
	under riverward wall:										
	[(28'x7.4')+(2x7.4'x1'x0.5)+(2x5'x3')+(2x3'x3'x0.5)] x 604'						=	146,409.60	CF	5,422.58	CY
	under landward wall:										
	[(28'x7.4')+(2x7.4'x1'x0.5)+(2x5'x3')+(2x3'x3'x0.5)] x 604'						=	146,409.60	CF	5,422.58	CY
	gate bay monolith										
	70' x 14.9' x 166'						=	173,138.00	CF	6,412.52	CY
	lock chamber	4.5	x	110	x	604	=	298,980.00	CF	11,073.33	CY
										28,331.01	CY
2	Anchor bars (#8 x 14.5')										
	riverward wall										
	(2.67 lbs x 14.5' x 6 ea) x 30 locations = 6,968 LB							6,968.00	LB		
	landward wall										
	(2.67 lbs x 14.5' x 6 ea) x 30 locations = 6,968 LB							6,968.00	LB		
3	Steel footing box (1/2" steel plate)									13,936.00	LB
	riverward wall										
	20.42 lb x [(6'x3'x2)+(4'x3'x2)] = 1,225 LB @ 30 locations							36,750.00	LB		
	landward wall										
	20.42 lb x [(6'x3'x2)+(4'x3'x2)] = 1,225 LB @ 30 locations							36,750.00	LB		
4	Concrete									73,500.00	LB
	riverward wall										
	-bottom lift (tremie)										
	Rock excav. - precast lockwall unit = 5,422.6 CY - 474 CY =									4,948.60	CY
	-2nd lift (reinforced)										
	outside wall, lower section	11.0	x	6.67	x	674	=	49,451.38	CF		
	inside wall, lower section	11.0	x	6.67	x	674	=	49,451.38	CF		
	outside wall, upper section	6.5	x	3.67	x	674	=	16,078.27	CF		
	inside wall, upper section	6.5	x	3.67	x	674	=	16,078.27	CF		
	-3rd lift (reinforced									4,854.05	CY
	lower section	4.00	x	24	x	674	=	64,704.00	CF		
	upper section	6.0	x	25.67	x	674	=	103,809.48	CF		
	-4th lift (reinforced)									6,241.24	CY
	outside wall	12.5	x	5	x	674	=	42,125.00	CF		
	inside wall	12.5	x	5	x	674	=	42,125.00	CF		
										3,120.37	CY
	landward wall										
	-bottom lift (tremie)										
	Rock excav. - precast lockwall unit = 5,317 CY - 474 CY =									4,843.00	CY
	-2nd lift (reinforced)										
	outside wall, lower section	11.0	x	6.67	x	674	=	49,451.38	CF		
	inside wall, lower section	11.0	x	6.67	x	674	=	49,451.38	CF		
	outside wall, upper section	6.5	x	3.67	x	674	=	16,078.27	CF		
	inside wall, upper section	6.5	x	3.67	x	674	=	16,078.27	CF		
	-3rd lift (reinforced									4,854.05	CY
	lower section	4.00	x	24	x	674	=	64,704.00	CF		
	upper section	4.00	x	25.67	x	674	=	69,206.32	CF		
										4,959.64	CY
	-4th lift (reinforced)										
	outside wall	12.5	x	5	x	674	=	42,125.00	CF		
	inside wall	12.5	x	5	x	674	=	42,125.00	CF		
										3,120.37	CY
	Total Concrete									36,941.32	CY

LOCK AND DAM NO. 22, LOCATION 2, TYPE C
(ROCK-FOUNDED)

CCOUNT CODE	ITEM	QUANTITY	UNIT	UNIT PRICE ($'s)	AMOUNT ($1,000's)
01.	LANDS AND DAMAGES				
	REAL ESTATE	1	JOB	SUM	20
04.	DAMS				
	04 DAMS SUBTOTAL				0
05.	LOCKS				
	SITEWORK				
	MOBILIZATION	1	JOB	SUM	8,000
	DEMOLITION	1	JOB	SUM	1,117
	ROCK EXCAVATION	22,969	CY	45	1,034
	LOCK DEWATERING	1	JOB	SUM	1,250
	COFFERDAM REMOVAL	1	JOB	SUM	81
	MARINE FACILITIES, TEMP MOORING STRUCTURE	1	JOB	SUM	3,900
	CONCRETE				
	CAST IN PLACE REINFORCED CONCRETE	25,525	CY	217	5,539
	PRECAST CONCRETE CHAMBER AND APPROACH WALL	2,400	CY	400	960
	TREMIE CONCRETE	9,808	CY	165	1,618
	PRESTRESSING STEEL	240,000	LB	2.5	600
	FURNISH AND SET LANDING PADS	18	EA	19000	342
	SET CULVERT UNITS	88	EA	16000	1,408
	FLOAT IN AND SET MITER GATE SILL	1	EA	140000	140
	STEEL REINFORCEMENT	1,531,500	LB	0.75	1,149
	TIMBER				
	12"X12" TIMBER FENDERS	13,480	LF	25	337
	METALS				
	SHEET PILING AND BRACING	1	JOB	SUM	2,900
	STRUCTURAL STEEL (GATES, VALVES, TRASHRACKS)	1	JOB	SUM	3,250
	STRUCTURAL STEEL (MISCELLANEOUS - LADDERS, ETC.)	1	JOB	SUM	3,040
	ELECTRICAL				
	ELECTRICAL SYSTEM	1	JOB	SUM	4,700
	MECHANICAL				
	GATE AND VALVE OPERATING MACHINERY	1	JOB	SUM	2,750
	MECHANICAL SYSTEMS	1	JOB	SUM	3,200
	MISCELLANEOUS	1	JOB	SUM	1,950
	05 LOCKS SUBTOTAL				49,264
05.60.	GUIDEWALLS				
	CONCRETE				
	CAST IN PLACE REINFORCED CONCRETE	7,042	CY	280.00	1,972
	PRECAST CONCRETE BEAMS (PRESTRESSED)	4,680	LF	1,170.00	5,476
	PRECAST CONCRETE (W/REINFORCEMENT)	2,114	CY	400.00	846
	TREMIE CONCRETE (WITH REINFORCEMENT)	1,709	CY	210.00	359
	GRAVEL FILL	25,669	CY	15.00	385
	METALS				
	SHEETPILING FOR CELLS (PS31)	105,618	SF	25.00	2,640
	SHEETPILE CUTOFF WALL (PZ35)	28,137	SF	30.00	844
	SHEETPILE RETAINING WALL (PZ40)	26,145	SF	30.00	784
	STRUCTURAL STEEL	1	JOB	SUM	3,811
	05.60 GUIDEWALLS SUBTOTAL				17,117
09.	CHANNEL WORK	1	JOB	SUM	4,800
	PROJECT SUBTOTAL				71,201
	CONTINGENCIES 25%				17,800
	PROJECT SUBTOTAL WITH CONTINGENCIES				89,002
30.	PLANNING, ENGINEERING, AND DESIGN (10%)				8,900
31.	CONSTRUCTION MANAGEMENT (10%)				8,900
	PROJECT TOTAL				$ 106,802

TOTAL BASIC LOCK COST (O4., 05., 05.60.) WITH CONTINGENCIES, PED, & CM* **$ 107,000**

*(EXCLUDES REAL ESTATE, RELOCATION, AND CHANNEL WORK WHICH ARE MORE SITE-SPECIFIC.)

Sml222cr

		QUANTITY CALCULATIONS									
		L/D 22 Location 2, Type C						Sheet 1_ of 3_			
1	Rock excavation										
	under riverward wall:										
	[(28'x4')+(2x8'x2'x0.5)+(2x1'x8')+(2x2'x4')+(2x4'x1'x0.5)] x 674'						=	110,536.00	CF	4,093.93	CY
	under landward wall:										
	[(28'x4')+(2x8'x2'x0.5)+(2x1'x8')+(2x2'x4')+(2x4'x1'x0.5)] x 674'						=	110,536.00	CF	4,093.93	CY
	gate bay monolith										
	70' x 13' x 110' = 100,100 CF						=	100,100.00	CF	3,707.41	CY
	lock chamber	4.5	x	110	x	604	=	298,980.00	CF	11,073.33	CY
										22,968.59	CY
2	Concrete										
	riverward wall										
	-bottom lift (tremie)										
	Rock excav. - sheet pile wall = 4,904 CY - 0 CY =									4,904.00	CY
	-2nd lift (reinforced)										
	outside wall	15.0	x	6	x	674	=	60,660.00	CF		
	inside wall	15.0	x	5	x	674	=	50,550.00	CF		
	-3rd lift (reinforced)									4,118.89	CY
	elev.T - elev. A	10.00	x	26	x	674	=	175,240.00	CF		
	-4th lift (reinforced)									6,490.37	CY
	outside wall	7	x	9	x	674	=	42,462.00	CF		
	inside wall	7	x	8	x	674	=	37,744.00	CF		
	landward wall									2,970.59	CY
	-bottom lift (tremie)										
	Rock excav. - sheet pile wall = 4,904 CY - 0 CY =									4,904.00	CY
	-2nd lift (reinforced)										
	outside wall	15.0	x	6	x	674	=	60,660.00	CF		
	inside wall	15.0	x	5	x	674	=	50,550.00	CF		
	-3rd lift (reinforced									4,118.89	CY
	elev.T - elev. A	10.00	x	27	x	674	=	181,980.00	CF		
	-4th lift (reinforced)									6,740.00	CY
	outside wall	7	x	5	x	674	=	23,590.00	CF		
	inside wall	7	x	5	x	674	=	23,590.00	CF		
										1,747.41	CY
	Total Concrete									35,994.15	CY
3	Steel tie rods @ 11' centers	61	x	2	=	122	EA				
4	Steel sheet pile wall, PZ27										
	riverward wall	45.5	x	2	x	674	=	61,334.00	SF		
	landward wall	45.5	x	2	x	674	=	61,334.00	SF		
										122,668.00	SF
5	Timber waler	10	x	2	x	674	=	13,480.00	LF		
6	Precast culvert liner										
	riverward wall	40.5	x	637	x	0.75	=	19,348.88	CF		
	landward wall	40.5	x	637	x	0.75	=	19,348.88	CF		
								38,697.75	CF		
										1,433.25	CY

LOCK AND DAM NO. 22, LOCATION 2, TYPE R
1200' LOCK ALTERNATIVE (ROCK-FOUNDED)

CCOUNT CODE	ITEM	QUANTITY	UNIT	UNIT PRICE ($'s)	AMOUNT ($1,000's)
01.	**LANDS AND DAMAGES**				
	REAL ESTATE	1	JOB	SUM	150
04.	**DAMS**				
	04 DAMS SUBTOTAL				0
05.	**LOCKS**				
	SITEWORK				
	MOBILIZATION	1	JOB	SUM	8,000
	DEMOLITION	1	JOB	SUM	500
	ROCK EXCAVATION	8,247	CY	45	371
	OVERBURDEN EXCAVATION	40,900	CY	4.5	184
	BACKFILL	16,700	CY	10	167
	LOCK DEWATERING	1	JOB	SUM	1,250
	MARINE FACILITIES, TEMP MOORING STRUCTURE	1	JOB	SUM	3,900
	CONCRETE				
	UNDERBASE GROUTING	460	CY	200	92
	CAST IN PLACE REINFORCED CONCRETE	15,415	CY	280	4,316
	PRECAST CONCRETE	5,019	CY	400	2,008
	GATE MONOLITH TREMIE CONCRETE	1,650	CY	210	347
	CONCRETE CELL FILL	29,510	CY	200	5,902
	FURNISH AND SET LANDING PADS	16	EA	19000	304
	FLOAT IN AND SET MITER GATE SILL	4	EA	100000	400
	SET PRECAST WALL PANELS	48	EA	8000	384
	SET PRECAST BEAMS	50	EA	3000	150
	ANCHOR FOR LANDWALL	1,875	EA	50	94
	METALS				
	RIVER WALL SHEET PILING (PS-31)	100,200	SF	22.04	2,208
	STAY IN PLACE TEMPLATES	20	EA	50,000	1,000
	STRUCTURAL STEEL (GATES, VALVES, TRASHRACKS)	1	JOB	SUM	3,250
	STRUCTURAL STEEL (MISCELLANEOUS - LADDERS, ETC.)	1	JOB	SUM	3,040
	ROCK BOLTS & SUPPORTS FOR PRECAST BEAMS	140	EA	350	49
	FASTNERS FOR PRECAST PANELS	336	EA	100	34
	HIGH CAPACITY ROCK ANCHORS	53	EA	8700	461
	ELECTRICAL				
	ELECTRICAL SYSTEM	1	JOB	SUM	4,700
	MECHANICAL				
	GATE AND VALVE OPERATING MACHINERY	1	JOB	SUM	2,750
	MECHANICAL SYSTEMS	1	JOB	SUM	3,200
	MISCELLANEOUS	1	JOB	SUM	1,950
	05 LOCKS SUBTOTAL				51,010
05.60.	**GUIDEWALLS**				
	SITEWORK				
	ROCK EXCAVATION	210	CY	45.00	9
	OVERBURDEN EXCAVATION	3060	CY	4.50	14
	CONCRETE				
	CAST IN PLACE REINFORCED CONCRETE	500	CY	280	140
	PRECAST CONCRETE BEAMS (PRESTRESSED)	2,025	LF	2,000	4,050
	TREMIE CONCRETE (WITH REINFORCEMENT)	2,515	CY	210	528
	METALS				
	STEEL CYLINDERS FOR CELLS (FILLED W CONCRE	5	EA	450,000	2,250
	NOSE STELL CYLINDER (FILLED WITH CONCRETE)	1	EA	900,000	900
	ANCHOR BARS FOR BEAMS	2,010	LF	87.60	176
	WALL ARMOR (14 STRIPS)	369,600	LB	4.20	1,552
	STEEL RUB PLATE AND ACCESSORIES	63,600	LB	6.00	382
	LADDERS AND MISC METALS	100,000	LB	3.00	300
	HANDRAILLING (ALUM.)	1,400	LF	125.40	176
	CHECKPOST	30	EA	1,546.00	46
	ACCESS HATCH	1	JOB	SUM	33
	ELECTRICAL				
	ELECTRICAL SYSTEM	1	JOB	SUM	78
	05.60 GUIDEWALLS SUBTOTAL				10,634
09.	**CHANNEL WORK**	1	JOB	SUM	3,200
	PROJECT SUBTOTAL				64,995
	CONTINGENCIES 25%				16,249
	PROJECT SUBTOTAL WITH CONTINGENCIES				81,243
30.	**PLANNING, ENGINEERING, AND DESIGN (10%)**				8,124
31.	**CONSTRUCTION MANAGEMENT (10%)**				8,124
	PROJECT TOTAL				$ 97,492

TOTAL BASIC LOCK COST (O4., 05., 05.60.) WITH CONTINGENCIES, PED, & CM* **$ 97,000**

*(EXCLUDES REAL ESTATE, RELOCATION, AND CHANNEL WORK WHICH ARE MORE SITE-SPECIFIC.)

Location 3, Type B, Rock

ACCOUNT CODE	ITEM L/D 22	QUANTITY	UNIT	NIT PRICE ($'s)	AMOUNT ($1,000's)
01.	LANDS AND DAMAGES				
	REAL ESTATE	1	JOB	SUM	15
04.	DAMS				0
05.	LOCKS				
	SITEWORK				
	MOBILIZATION	1	JOB	SUM	8,000
	DEMOLITION AND REHABILITATION	1	JOB	SUM	1,800
	DREDGING	52,046	CY	4.50	234
	ROCK EXCAVATION	15,820	CY	45.00	712
	EXTENSION OF EXISTING DOWNSTREAM GUIDEWALL	1	JOB	SUM	7,700
	COFFERDAM FILL (DOWNSTREAM CLOSURE)	4416	CY	14.50	64
	EXISTING LOCK DEWATERING	1	JOB	SUM	440
	NEW LOCK DEWATERING	1	JOB	SUM	440
	CONCRETE				
	CAST IN PLACE REINFORCED CONCRETE	64,970	CY	280.00	18,192
	PRECAST CONCRETE (W/REINFORCEMENT)	11,220	CY	400.00	4,488
	SET LANDING PADS & WALL UNITS	1	JOB	SUM	3,070
	TREMIE CONCRETE (WITH REINFORCEMENT)	4,690	CY	210.00	985
	GRAVEL FILL	10,570	CY	15.00	159
	METALS				
	SHEETPILING (DOWNSTREAM CLOSURE, PSA23)	15,700	SF	30.00	471
	STRUCTURAL STEEL (GATES, VALVES, TRASHRACKS,	1	JOB	SUM	3,250
	STRUCTURAL STEEL (MISCELLANEOUS - LADDERS, ET	1	JOB	SUM	2,500
	ELECTRICAL				
	ELECTRICAL SYSTEM	1	JOB	SUM	4,700
	MECHANICAL				
	GATE AND VALVE OPERATING MACHINERY	1	JOB	SUM	2,053
	MECHANICAL SYSTEMS	1	JOB	SUM	2,900
	MISCELLANEOUS	1	JOB	SUM	6,216
	05 LOCKS SUBTOTAL				68,373
05.60.	GUIDEWALLS				
	CONCRETE				
	CAST IN PLACE REINFORCED CONCRETE	15,123	CY	280.00	4,234
	PRECAST CONCRETE BEAMS (PRESTRESSED)	6,000	LF	1,170.00	7,020
	PRECAST CONCRETE (W/REINFORCEMENT)	2,611	CY	400.00	1,044
	TREMIE CONCRETE (WITH REINFORCEMENT)	15,186	CY	210.00	3,189
	GRAVEL FILL	29,120	CY	15.00	437
	METALS				
	SHEETPILING FOR CELLS (PS31)	147,564	SF	25.00	3,689
	SHEETPILE CUTOFF WALL (PZ35)	32,775	SF	30.00	983
	STRUCTURAL STEEL	1	JOB	SUM	3,811
	05.60 GUIDEWALLS SUBTOTAL				24,408
09.	CHANNEL WORK	1	JOB	SUM	3,400
	PROJECT SUBTOTAL				96,196
	CONTINGENCIES (25%)				23,804
	PROJECT SUBTOTAL WITH CONTINGENCIES				120,000
30.	PLANNING, ENGINEERING, AND DESIGN (10%)				12,000
31.	CONSTRUCTION MANAGEMENT (10%)				12,000
	PROJECT TOTAL				144,000

TOTAL BASIC LOCK COST (O4., 05., 05.60.) WITH CONTINGENCIES, PED, & CM* **$ 144,000**

*(EXCLUDES REAL ESTATE, RELOCATION, AND CHANNEL WORK WHICH ARE MORE SITE-SPECIFIC.)

Subject	ROCK FOUNDED LOCKS: L/D 22 Location 3 Quantities for Type B Lock, Modular Construction	Date SEP 96
Computed by Michael Cummings	Checked David R. Wehrley	Sheet 1 of 5

Riverward Lockwall
(Including the miter gate monolith)

Note: For quantities change the Blue values in the cross section.

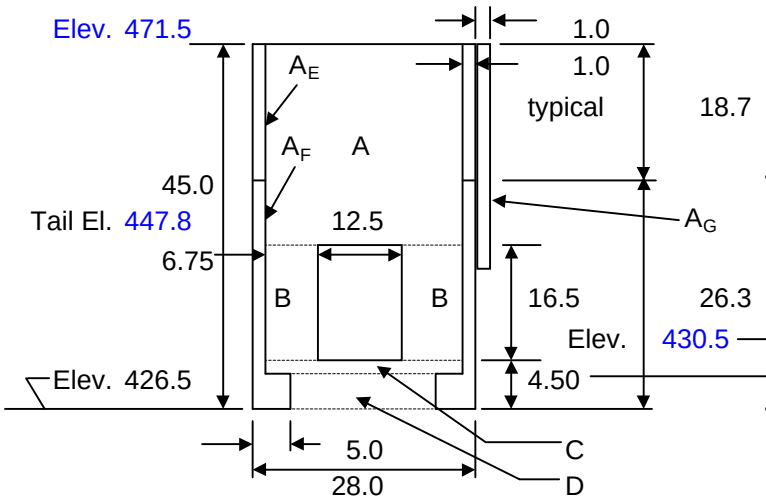

Cast in place concrete		
A_A =	624.0	SF
A_B =	222.8	SF
A_C =	26.0	SF
Total Area =	872.8	SF
Volume =	40,276	CY
Pre-cast concrete		
A_E =	37.4	SF
A_F =	80.6	SF
A_G =	32.7	SF
Total Area =	150.7	SF
Volume =	6,955	CY
Tremie concrete		
A_D =	63.0	SF
Volume =	2,907	CY

Wall Length = 1,246 ft

Landward Lockwall ("l-wall")
(Including the miter gate monolith)

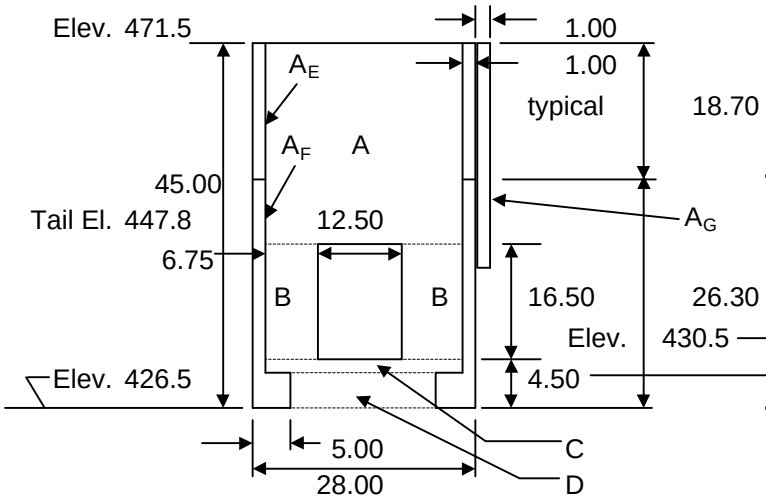

Cast in place concrete		
A_A =	624.0	SF
A_B =	222.8	SF
A_C =	26.0	SF
Total Area =	872.8	SF
Volume =	24,696	CY
Pre-cast concrete		
A_E =	37.4	SF
A_F =	80.6	SF
A_G =	32.7	SF
Total Area =	150.7	SF
Volume =	4,264	CY
Tremie concrete		
A_D =	63.0	SF
Volume =	1,783	CY

Wall Length = 764 ft

Subject		Date
L/D 22 Location 3 Quantities for Type B Lock, Modular Construction		SEP 96
Computed by Michael Cummings	Checked David R. Wehrley	Sheet 2 of 5

Typical cell for downstream closure cofferdam

Change blue value.

Plan Area = 707 ft^2

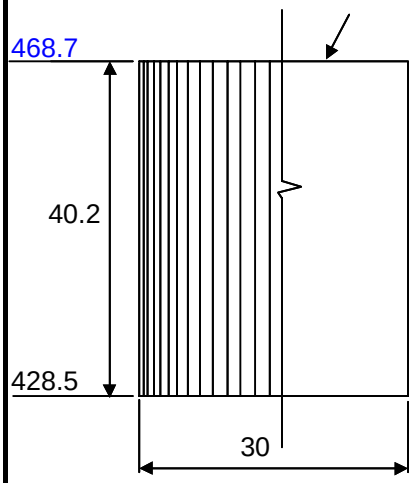

Pile type: psa23 Length = 1.33 ft
Choose PSA23, PS27.5, or PS31

Area of arcs =	845	SF	(Ref. platr3b1.dgn)
Area of 3 cells =	2,121	SF	
Fill Quantity =	4,416	CY	
Circumference of 1 cell =	94.2	FT	
Perimeter of all arcs =	106.9	FT	(Ref. platr3b1.dgn)
Sheetpile Quantity =	15,664	SF	

QUANTITY WRAP-UP (EXCLUDING GUIDEWALLS):

A. CAST-IN-PLACE CONCRETE

Riverwall =	40,276	CY
I-wall =	24,696	CY
Total =	**64,970**	CY

B. PRECAST CONCRETE

Riverwall =	6,955	CY
I-wall =	4,264	CY
Total =	**11,220**	CY

C. TREMIE CONCRETE

Riverwall =	2,907	CY
I-wall =	1,783	CY
Total =	**4,690**	CY

D. COFFERDAM FILL

Total =	**4,420**	CY

E. COFFERDAM SHEETPILING

Total =	**15,700**	SF

Subject		Date
L/D 22 Location 3 Quantities for Type B Lock, Guardwalls		SEP 96
Computed by Michael Cummings	Checked	Sheet 3 of 5

Upstream Guardwall Cell (typical of 14)

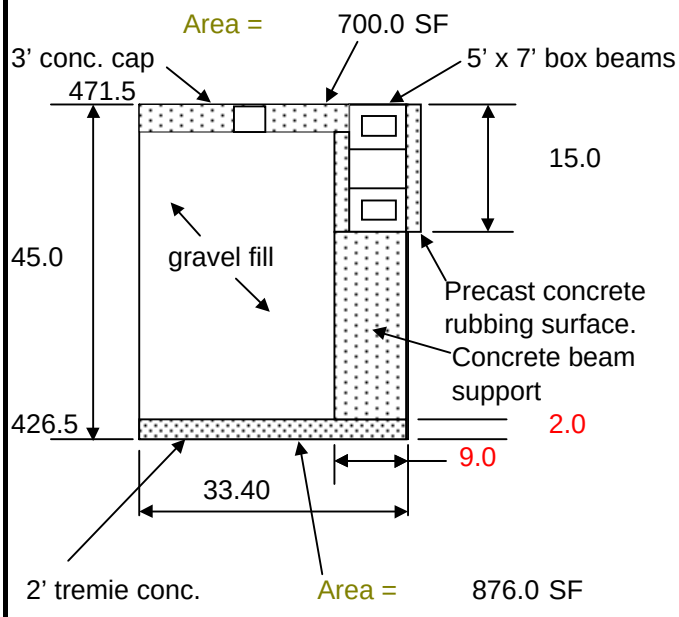

Cast-in-Place Concrete

3' conc. cap	=	78	CY
Beam support	=	223	CY
Total	=	301	CY
For 14 cells	=	4,211	CY
Tremie concrete	=	65	CY
For 14 cells	=	910	CY

Precast Concrete (for entire guardwall length)

5'x7' beam	=	1,741	CY
rubbing pl.	=	979	CY
Total	=	2,720	CY
Gravel fill	=	1,040	CY
For 14 cells	=	14,560	CY
Sheet Piling	=	4,722	SF
For 14 cells	=	66,105	SF

End Cell of Guardwall

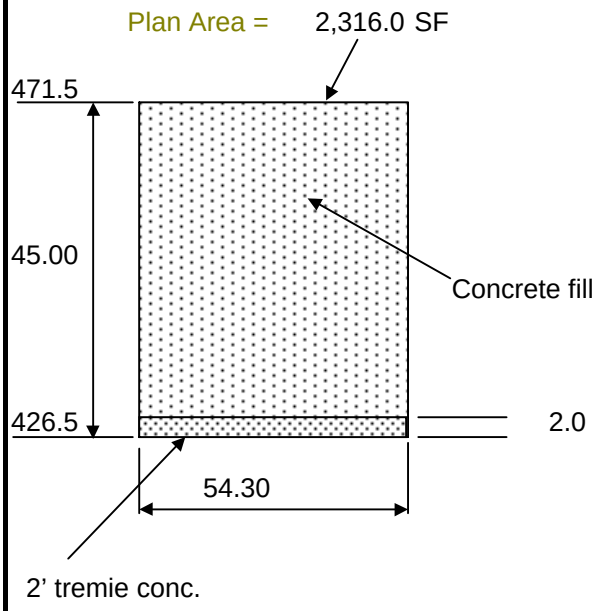

Cast-in-Place Concrete Volume	=	3,688	CY
Tremie concrete	=	172	CY
Sheet Piling (PS31)	=	7,676	SF

Subject		Date
L/D 22 Location 3 Quantities for Type B Lock, Crane-In Construcion		SEP 96
Computed by Michael Cummings	Checked	Sheet 4 of 5

Downstream Guardwall Cell (typical of 14)

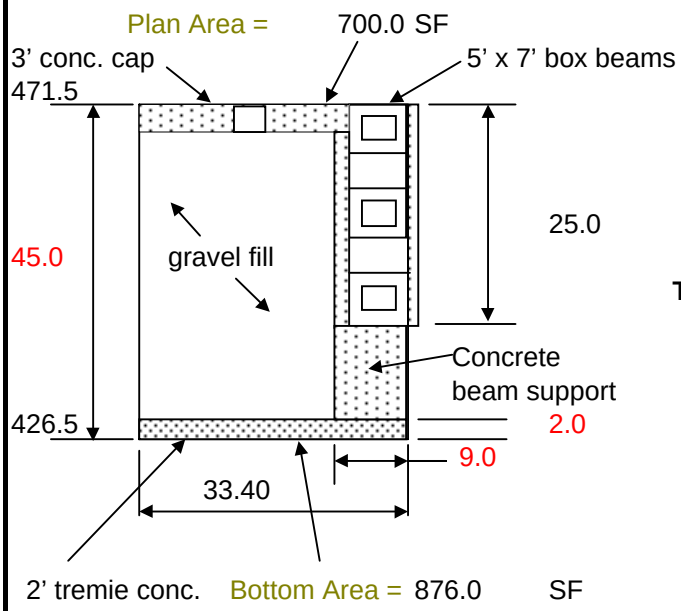

Cast-in-Place Concrete

3' conc. cap	=	78	CY
Beam support	=	175	CY
Total	=	252	CY
for 14 cells	=	3,535	CY
Tremie concrete	=	65	CY
for 14 cells	=	910	CY
Precast Concrete			
5'x7' beam	=	2,611	CY
rubbing pl.	=	1,632	CY
Total	=	4,243	CY
Gravel fill	=	1,040	CY
for 14 cells	=	14,560	CY
Sheet Piling	=	4,722	SF
for 14 cells	=	66,105	SF

End Cell of Guardwall

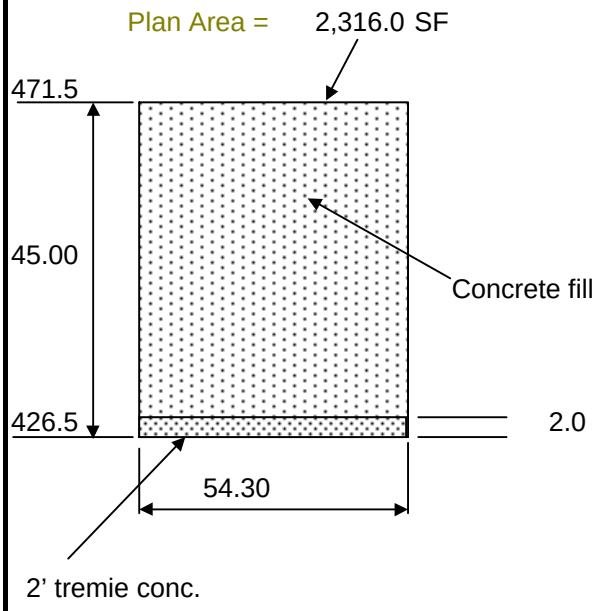

Cast-in-Place Concrete Volume	=	3,688	CY
Tremie concrete	=	172	CY
Sheet Piling (PS31)	=	7,676	SF

Subject		Date
L/D 22 Location 3 Quantities for Type B Lock, Crane-In Construcion		SEP 96
Computed by Michael Cummings	Checked	Sheet 5 of 5

GUARDWALL QUANTITY WRAP-UP :

A. CAST-IN-PLACE CONCRETE

Upstream =	7,900	CY
Downstream =	7,223	CY
TOTAL=	15,123	CY

B. PRECAST CONCRETE

Upstream Beams =	1,741	CY
ownstream Beams =	2,611	CY
TOTAL=	4,352	CY

Upstream Panels =	979	CY
Downstream Panels =	1,632	CY
TOTAL=	2,611	CY

C. GRAVEL FILL

Upstream =	14,560	CY
Downstream =	14,560	CY
TOTAL=	29,120	CY

D. SHEETPILING

Upstream =	73,782	CY
Downstream =	73,782	CY
TOTAL=	147,564	CY

E. TREMIE CONCRETE

Upstream =	1,082	CY
Downstream =	1,082	CY
TOTAL=	2,164	CY

LOCATION 3, TYPE C
1200' LOCK ALTERNATIVE (ROCK FOUNDED)

CCOUNT CODE	ITEM L/D22	QUANTITY	UNIT	UNIT PRICE ($'s)	AMOUNT ($1,000's)
01.	**LANDS AND DAMAGES**				
	REAL ESTATE	1	JOB	SUM	15
04.	**DAMS**				
	04 DAMS SUBTOTAL				0
05.	**LOCKS**				
	SITEWORK				
	MOBILIZATION	1	JOB	SUM	8,000
	DEMOLITION	1	JOB	SUM	1,800
	DREDGING	52,050	CY	4.50	234
	ROCK EXCAVATION	15,820	CY	45	712
	EXTENSION OF EXISTING DOWNSTREAM GUIDEWALL	1	JOB	SUM	7,700
	COFFERDAM FILL (DOWNSTREAM CLOSURE)	4,416	CY	14.50	64
	EXISTING LOCK DEWATERING	1	JOB	SUM	440
	NEW LOCK DEWATERING	1	JOB	SUM	440
	CONCRETE				
	CAST IN PLACE REINFORCED CONCRETE	26,992	CY	280	7,558
	PRECAST CONCRETE (W/REINFORCEMENT)	23,256	CY	400	9,302
	TREMIE CONCRETE	2,596	CY	165	428
	PERMANENT CELL FILL - GRAVEL (RIVERWALL)	35,922	CY	15.00	539
	PERMANENT CELL FILL - CONCRETE (I-WALL)	17,198	CY	280.00	4,816
	PRECAST PANELS FOR CELLULAR WALL (RIVERWALL)	2,369	CY	600	1,421
	PRECAST PANELS FOR CELLULAR WALL (I-WALL)	2,272	CY	800	1,818
	METALS				
	SHEET PILING (DOWNSTREAM CLOSURE, PSA23)	15,664	SF	25.00	392
	SHEET PILING - PERMANENT PSA23 (LOCKWALL)	229,553	SF	25.00	5,739
	STRUCTURAL STEEL (GATES, VALVES, TRASHRACKS)	1	JOB	SUM	3,250
	STRUCTURAL STEEL (MISCELLANEOUS - LADDERS, ETC.)	1	JOB	SUM	2,500
	ELECTRICAL				
	ELECTRICAL SYSTEM	1	JOB	SUM	4,700
	MECHANICAL				
	GATE AND VALVE OPERATING MACHINERY	1	JOB	SUM	2,750
	MECHANICAL SYSTEMS	1	JOB	SUM	3,200
	MISCELLANEOUS	1	JOB	SUM	6,780
	05 LOCKS SUBTOTAL				74,583
05.60.	**GUIDEWALLS**				
	CONCRETE				
	CAST IN PLACE REINFORCED CONCRETE	7,746	CY	280.00	2,169
	PRECAST CONCRETE BEAMS (PRESTRESSED)	6,000	LF	1,170.00	7,020
	PRECAST CONCRETE PANELS (W/REINFORCEMENT)	2,611	CY	400.00	1,044
	TREMIE CONCRETE (WITH REINFORCEMENT)	9,541	CY	210.00	2,004
	GRAVEL FILL	29,120	CY	15.00	437
	METALS				
	SHEETPILING FOR CELLS (PS31)	147,564	SF	25.00	3,689
	SHEETPILE CUTOFF WALL (PZ35)	34,000	SF	30.00	1,020
	STRUCTURAL STEEL	1	JOB	SUM	3,811
	05.60 GUIDEWALLS SUBTOTAL				21,194
09.	**CHANNEL WORK**	1	JOB	SUM	3,400
	PROJECT SUBTOTAL				99,191
	CONTINGENCIES 25%				24,798
	PROJECT SUBTOTAL WITH CONTINGENCIES				123,989
30.	**PLANNING, ENGINEERING, AND DESIGN (10%)**				12,000
31.	**CONSTRUCTION MANAGEMENT (10%)**				12,000
	PROJECT TOTAL				147,989

TOTAL BASIC LOCK COST (O4., 05., 05.60.) WITH CONTINGENCIES, PED, & CM* **$ 148,000**

*(EXCLUDES REAL ESTATE, RELOCATION, AND CHANNEL WORK WHICH ARE MORE SITE-SPECIFIC.)

Subject	ROCK FOUNDED LOCKS: L/D 22 Location 3, Quantities for Type C Lock	Date Jun 97
Computed by David R. Wehrley	Checked DRW	Sheet 1 of 6

Crane-In Gate Monolith

Note: For quantities change the values in the Blue cells of the cross section.

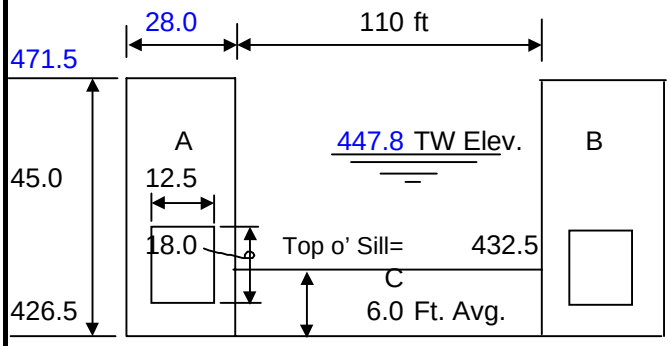

Precast concrete miter gate monolith

A =	8,817	CY
B =	8,817	CY
C =	5,622	CY
Total =	**23,256**	CY

67.6

Monolith Length (into the paper) = 230.0 ft

Typical sheet pile cell for the Riverwall

Cells are 33.8 ft. center-to-center.

Top Area = 616.0 ft^2

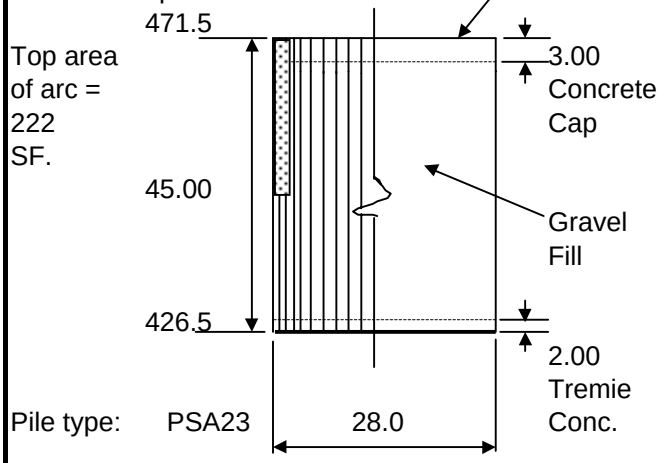

Sheet Piling =	3,958	SF/cell
Sheet Piling =	1,404	SF/arc
Total Sheet Piling =	**155,161**	SF
Cell Fill (gravel) =	**35,922**	CY Total
Precast concrete (panels) =	**2,369**	CY
C.I.P. concrete cap =	**2,694**	CY
Tremie Concrete =	**1796**	CY
Riverwall Length =	978.0	

Typical cell for the Intermediate lockwall

Cells are 31.4 ft. center-to-center.

Top Area = 531.0 ft^2

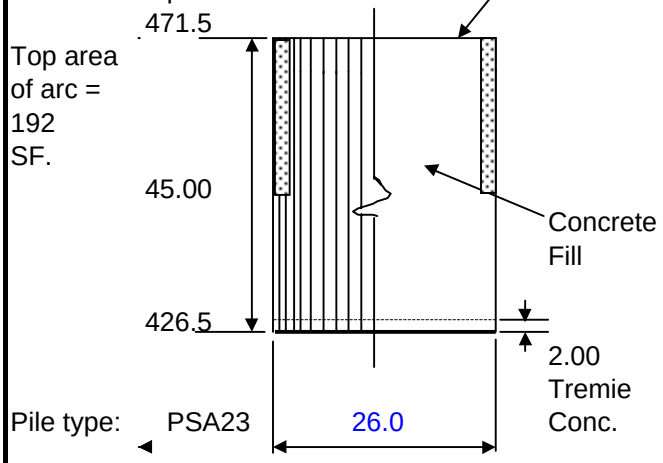

Sheet Piling =	3,676	SF/cell
Sheet Piling =	1,305	SF/arc
Total Sheet Piling =	**74,393**	SF
Cell Fill (concrete) =	**17,198**	CY Total
Precast concrete (panels) =	**2,272**	CY
Tremie Concrete =	**800**	CY
I-wall Length =	469.0	

Subject		Date
L/D 22 Location 3, Quantities for Type C Lock 3400		Jun 97
Computed by David R. Wehrley	Checked DRW 24809	Sheet 2 of 6

In ground culvert

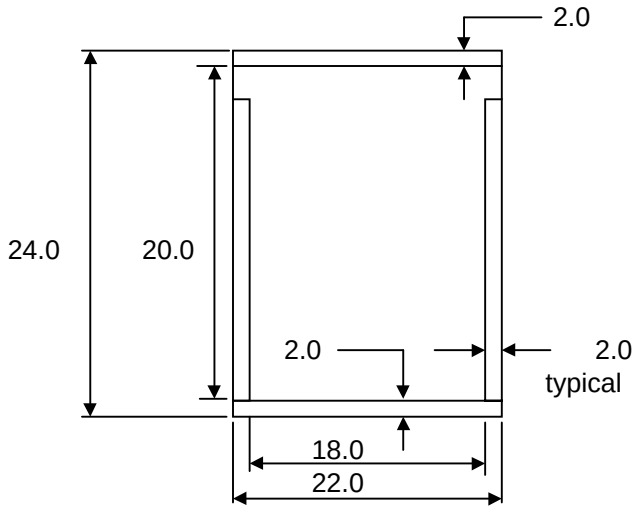

Length = 862.0 ft
Branch length = 267.0 ft

Main culvert concrete = 5,364 CY
Branch culvert concrete = 1,661 CY

Total = 7,100 CY

Typical cell of cofferdam

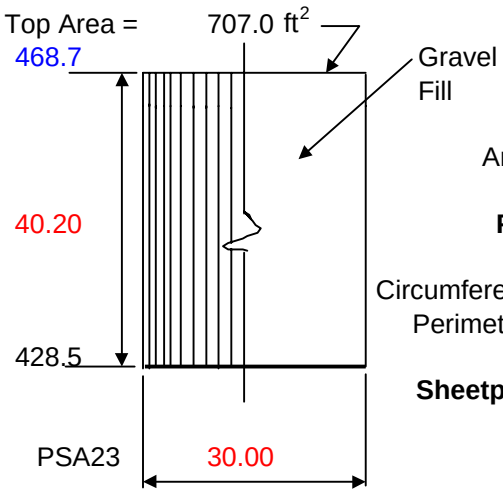

Pile type: PSA23

Area of arcs = 845 SF (Ref. platr3b1.dgn)
Area of 3 cells = 2,121 SF

Fill Quantity = 4,416 CY

Circumference of 1 cell = 94.2 FT
Perimeter of all arcs = 106.9 FT (Ref. platr3b1.dgn)

Sheetpile Quantity = 15,664 SF

Subject		Date
L/D 22 Location 3, Quantities for Type C Lock		Jun 97
Computed by	Checked	Sheet of
David R. Wehrley	DRW	3 6

QUANTITY SUMMARY (Excluding Guardwalls):

A. CAST-IN-PLACE CONCRETE

F/E CULVERT =	7,100	CY
CELL CAPS =	2,694	CY
CONCRETE CELL FILL =	17,198	CY
TOTAL =	**26,992**	CY

B. PRECAST CONCRETE

ITER GATE FLOAT-IN MONO=	23,256	CY
LOCKWALL PANELS =	4,641	CY
TOTAL =	**27,897**	CY

C. TREMIE CONCRETE

LOCKWALLS =	**2596**	CY

D. SHEETPILING

LOCKWALLS (PSA23) =	229,553	SF
OWNSTREAM COFFERDAM =	15,664	SF
TOTAL =	**245,217**	SF

E. GRAVEL FILL

LOCKWALLS =	35,922	CY
COFFERDAM =	4,416	CY
TOTAL =	**40,338**	CY

Subject		Date
L/D 22 Location 3 Quantities for Type B Lock, Guardwalls		Jun 97
Computed by	Checked	Sheet of
Michael Cummings	David R. Wehrley	4 6

Upstream Guardwall Cell (typical of 14)

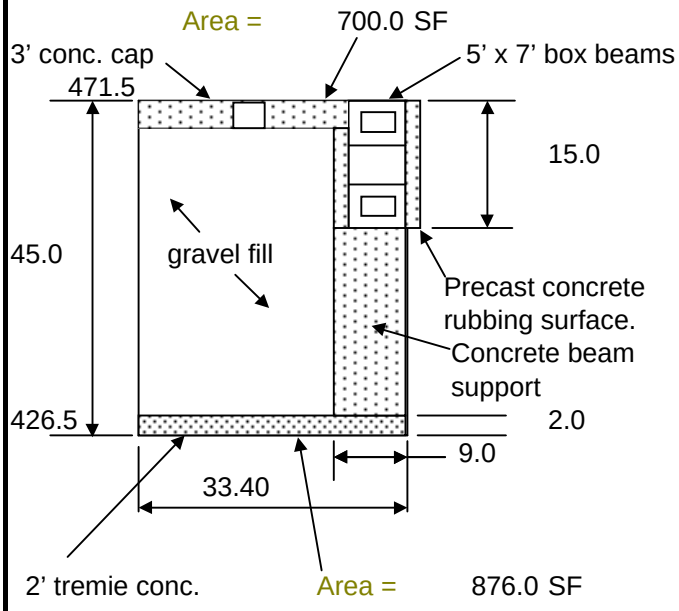

Cast-in-Place Concrete

3' conc. cap	=	78	CY
Beam support	=	223	CY
Total	=	301	CY
For 14 cells	=	4,211	CY
Tremie concrete	=	65	CY
For 14 cells	=	910	CY

Precast Concrete (for entire guardwall length)

5'x7' beam	=	1,741	CY
rubbing pl.	=	979	CY
Total	=	2,720	CY
Gravel fill	=	1,040	CY
For 14 cells	=	14,560	CY
Sheet Piling	=	4,722	SF
For 14 cells	=	66,105	SF

End Cell of Guardwall

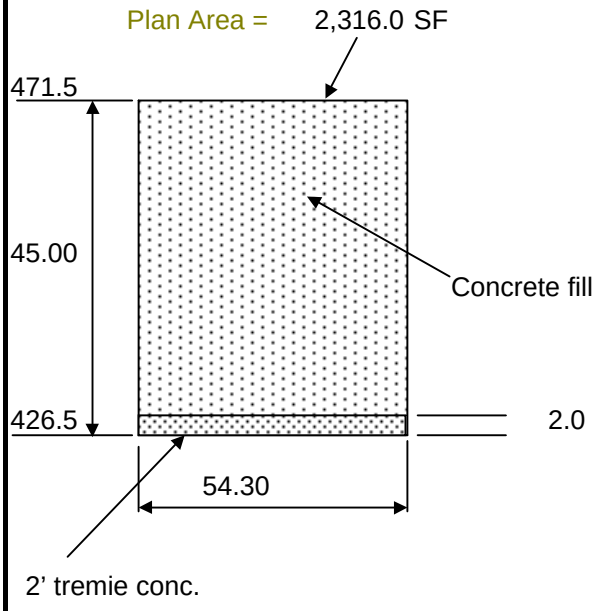

Concrete Fill (tremie price)

Volume	=	3,688	CY
Tremie concrete	=	172	CY
Sheet Piling (PS31)	=	7,676	SF

Subject		Date
L/D 22 Location 3 Quantities for Type B Lock, Crane-In Construcion		Jun 97
Computed by	Checked	Sheet of
Michael Cummings	David R. Wehrley	5 6

Downstream Guardwall Cell (typical of 14)

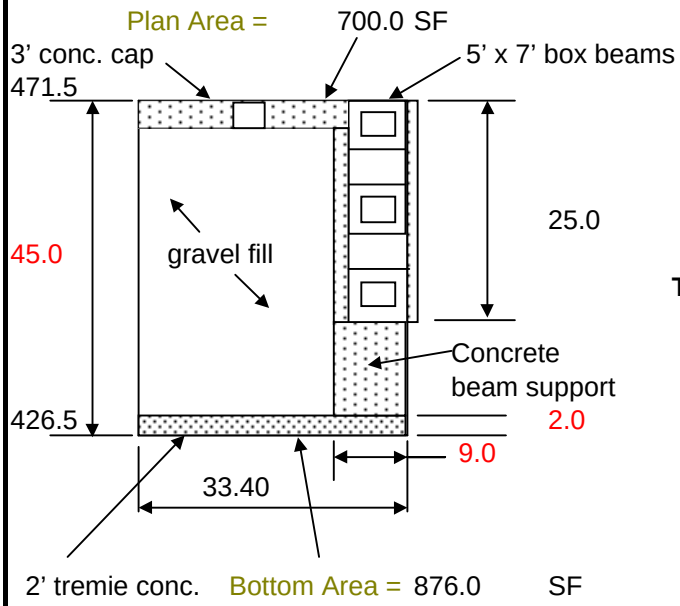

Cast-in-Place Concrete

3' conc. cap	=	78	CY
Beam support	=	175	CY
Total	=	252	CY
for 14 cells	=	3,535	CY
Tremie concrete	=	65	CY
for 14 cells	=	910	CY
Precast Concrete			
5'x7' beam	=	2,611	CY
rubbing pl.	=	1,632	CY
Total	=	4,243	CY
Gravel fill	=	1,040	CY
for 14 cells	=	14,560	CY
Sheet Piling	=	4,722	SF
for 14 cells	=	66,105	SF

End Cell of Guardwall

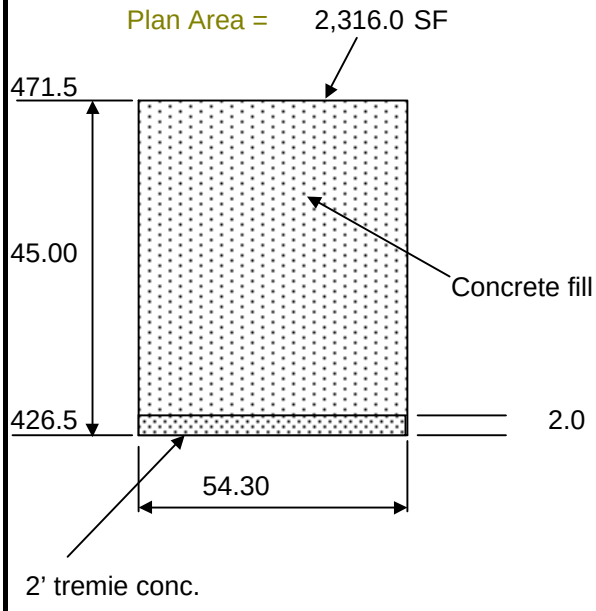

Concrete Fill (tremie price)			
Volume	=	3,688	CY
Tremie concrete	=	172	CY
Sheet Piling (PS31)	=	7,676	SF

Subject		Date
L/D 22 Location 3 Quantities for Type B Lock, Crane-In Construcion		Jun 97
Computed by	Checked	Sheet of
Michael Cummings	David R. Wehrley	6 6

GUARDWALL QUANTITY WRAP-UP :

A. CAST-IN-PLACE CONCRETE

Upstream =	4,211	CY
Downstream =	3,535	CY
TOTAL=	7,746	CY

B. PRECAST CONCRETE

Upstream Beams =	1,741	CY
ownstream Beams =	2,611	CY
TOTAL=	4,352	CY

Upstream Panels =	979	CY
Downstream Panels =	1,632	CY
TOTAL=	2,611	CY

C. GRAVEL FILL

Upstream =	14,560	CY
Downstream =	14,560	CY
TOTAL=	29,120	CY

D. SHEETPILING

Upstream =	73,782	CY
Downstream =	73,782	CY
TOTAL=	147,564	CY

E. TREMIE CONCRETE

Upstream =	4,770	CY
Downstream =	4,770	CY
TOTAL=	9,541	CY

LOCK AND DAM NO.22, LOCATION NO.4, TYPE A,
1200' LOCK ALTERNATIVE (ROCK FOUNDED)

ACCOUNT CODE	ITEM	QUANTITY	UNIT	UNIT PRICE ($'s)	AMOUNT ($1,000's)
01.	**LANDS AND DAMAGES**				
	REAL ESTATE	1	JOB	SUM	20
04.	**DAMS**				
	REMOVAL OF EXISTING STRUCTURES	1	JOB	SUM	150
	04 DAMS SUBTOTAL				150
05.	**LOCKS**				
	SITEWORK				
	MOBILIZATION	1	JOB	SUM	10,650
	DEMOLITION	1	JOB	SUM	1,910
	EXCAVATION	48,960	CY	6.25	306
	FOUNDATION FILL AT SCOUR HOLE	0	CY	18.75	0
	LOCK WALL FILL AND COFFERDAM FILL	291,700	CY	10.00	2,917
	CAPSTONE	52,660	TN	25.00	1,317
	RIPRAP	33,380	TN	20.00	668
	LEVELING STONE IN LOCK FLOOR	4,580	TN	15.00	69
	GRAVEL FILTER IN LOCK FLOOR	16,606	TN	15.00	249
	GEOTEXTILE	13,740	SY	6.00	82
	FOUNDATION/LOCK DEWATERING	1	JOB	SUM	3,000
	MARINE FACILITIES, TEMP. MOORING STR.	1	JOB	SUM	3,900
	CONCRETE				
	STRUCTURAL GROUTING	450	CY	200	90
	CAST IN PLACE REINFORCED CONCRETE	100,100	CY	217	21,722
	CAST IN PLACE CONNECTIONS	964	CY	725	699
	PRECAST CONCRETE	0	CY	400	0
	TREMIE CONCRETE, BASE .	10,340	CY	165	1,706
	PRECAST FLOOR PAVERS AND STRUTS	15,450	CY	286	4,419
	SET PRECAST FLOOR BEAMS	31	EA	16000	496
	SET FLOOR PANELS	62	EA	10000	620
	STEEL REINFORCEMENT	7,614,000	LB	0.75	5,711
	METALS				
	SHEET PILING	568,700	SF	35.80	20,359
	SHEET PILE BRACING	1	JOB	SUM	350
	FOUNDATION PILING AND TESTING	209,190	LF	39.75	8,315
	STRUCTURAL STEEL (GATES, VALVES, ETC.)	1	JOB	SUM	11,613
	STRUCT. STEEL (MISCELLANEOUS - LADDERS, ETC.)	1	JOB	SUM	3,040
	ELECTRICAL				
	ELECTRICAL SYSTEM		JOB	SUM	4,700
	INSTRUMENTATION	1	JOB	SUM	1,250
	MECHANICAL				
	GATE AND VALVE OPERATING MACHINERY	1	JOB	SUM	2,750
	MECHANICAL SYSTEMS	1	JOB	SUM	3,200
	MISCELLANEOUS	1	JOB	SUM	1,950
	05 LOCKS SUBTOTAL				118,057

LOCK AND DAM NO.22, LOCATION NO.4, TYPE A,
1200' LOCK ALTERNATIVE (ROCK FOUNDED)

05.60.	**GUIDEWALLS**				
	SITEWORK				
	EXCAVATION	118,490	CY	4.5	533
	BACKFILL	73,640	CY	10	736
	SCOUR PROTECTION	46,350	TON	15	695
	CONCRETE				
	42" DIAMETER PILES	6,360	LF	400	2,544
	CAST IN PLACE REINFORCED CONCRETE	5,409	CY	150	811
	PRECAST BEAMS	17,325	CY	500	8,663
	PRECAST BEAM SEATS	262	CY	1000	262
	TREMIE CONCRETE	1,709	CY	500	855
	PERMANENT CELL FILL (C0NCRETE)	4,954	CY	200	991
	GROUT FOR BEAMS	778	CY	1000	778
	STEEL REINFORCEMENT	2,921,700	LB	0.75	2,191
	GRAVEL FILL	17,199	CY	10	172
	METALS				
	SHEET PILING	92,881	SF	25.00	2,322
	FOUNDATION PILING	1	JOB	SUM	318
	POST TENSIONING	2,030	LF	30	61
	STRUCTURAL STEEL	1	JOB	SUM	4,060
	05.60 GUIDEWALLS SUBTOTAL				25,992
09.	**CHANNEL WORK**	1	JOB	SUM	7,000
	PROJECT SUBTOTAL				151,219
	CONTINGENCIES 25%				37,805
	PROJECT SUBTOTAL WITH CONTINGENCIES				189,024
30.	**PLANNING, ENGINEERING, AND DESIGN (10%)**				19,000
31.	**CONSTRUCTION MANAGEMENT (10%)**				19,000
	PROJECT TOTAL				$ 227,000

LOCK AND DAM NO.22, LOCATION 4, TYPE A
1200' LOCK ALTERNATIVE (ROCK FOUNDED)

Subject	ROCK FOUNDED LOCKS: L/D 22 Location 4 Quantities for Type A Lock, Crane-In Construction	Date Sep 96
Computed by Michael Cummings	Checked	Sheet 1 of 6

Gate Monolith

Note: For quantities change the RED values in the cells of the dimensioned cross section shown.

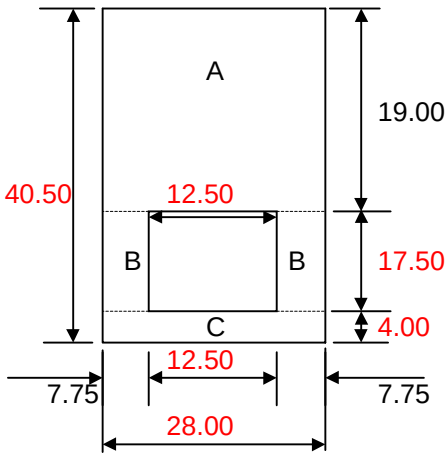

Cast in place concrete

A_g =	532.0	ft^2	
B_g =	271.3	ft^2	
C_g =	112.0	ft^2	
D_g =	218.8	ft^2	CULVERT
Total =	915.3	ft^2	

hght chk = 40.50 left
hght chk = 40.50 right

US lngth = 265.0 ft DS lngth = 240.0 ft

Lock Wall
typical

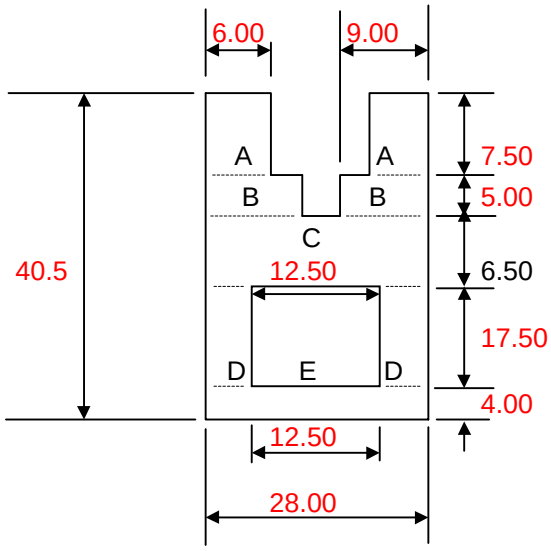

Cast in place concrete

A_w =	90.00	ft^2	
B_w =	90.00	ft^2	
C_w =	182.00	ft^2	
D_w =	271.25	ft^2	
E_w =	218.75	ft^2	CULVERT
F_w =	112.00	ft^2	
Total =	745.25	ft^2	

hght chk = 40.50 left
hght chk = 40.50 right

RS Wall = 1,050.0 ft LS Wall = 1,050.0 ft

LOCK AND DAM NO.22, LOCATION 4, TYPE A
1200' LOCK ALTERNATIVE (ROCK FOUNDED)

Subject		Date
L/D 22 Location 4 Quantities for Type A Lock, Crane-In Construction		Sep 96
Computed by Michael Cummings	Checked	Sheet 2 of 6

Typical cell for cofferdam

Area = 1,736.0 ft^2

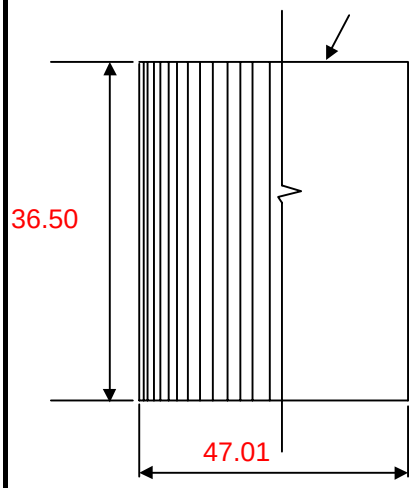

Pile type: PS31
Choose PSA23, PS27.5, or PS31

Area between cells:

Area =	773.0	ft^2
Distance =	15.28	ft
Length =	1.64	ft
Number in cell =	90	piles
No. in space =	20	piles
US Length =	2,650.0	ft
DS Length =	2,650.0	ft

LOCK CHAMBER WALLS:

A. WALL MONOLITHS

1. River side walls

(a) Cast in place concrete

Volume = 28,981.9 CY

(b) Precast concrete

Volume = .0 CY

1. Land side walls

(a) Cast in place concrete

Volume = 28,981.9 CY

(b) Precast concrete

Volume = .0 CY

B. GATE MONOLITHS

1. Upstream cast in place concrete

Volume = 17,966.0 CY

2. Upstream precast concrete

Volume = .0 CY

1. Downstream cast in place concrete

Volume = 16,271.1 CY

2. Downstream precast concrete

Volume = .0 CY

LOCK AND DAM NO.22, LOCATION 4, TYPE A
1200' LOCK ALTERNATIVE (ROCK FOUNDED)

Subject		Date
L/D 22 Location 4 Quantities for Type A Lock, Crane-In Construcion		Sep 96
Computed by Michael Cummings	Checked	Sheet 3 of 6

COFFERDAMS:

1. Cofferdam #1, Upstream

Number = 43.0 cells

Total = 9,460.0 piles

2. Cofferdam #2, Upstream

Number = 43.0 cells

Total = 291,694.0 CY fill volume

SILLS:

Length = 120.0 ft
Width = 111.0 ft
Height = 8.0 ft

Volume = 7,893.3 CY

SUMMARY:

CONCRETE (Cast in place)

A.	Lockwalls =	57,963.9 CY
B.	Gate monoliths =	34,237.1 CY
C.	Sills =	7,893.3 CY
	Total =	100,100.0 CY

PRECAST CONCRETE

A.	Lockwalls =	.0 CY
B.	Gate monoliths =	.0 CY
	Total =	.0 CY

SHEETPILES

A.	Required number for cofferdams =	9,460.0 piles
B.	Required number for walls =	0 piles
	Total =	9,500.0 piles
	Total =	568,700.0 SF of piling

FILL

A.	Required fill for cofferdams =	291,694.0 CY
	Total =	291,700.0 CY

LOCK AND DAM NO.22, LOCATION 4, TYPE A
1200' LOCK ALTERNATIVE (ROCK FOUNDED)

Subject		Date
L/D 22 Location 3 Quantities for Type B Lock, Crane-In Construcion		Sep 96
Computed by Michael Cummings	Checked	Sheet 4 of 6

Upstream Guidewall Cell, Small

(typical)

Area = 700.0 SF

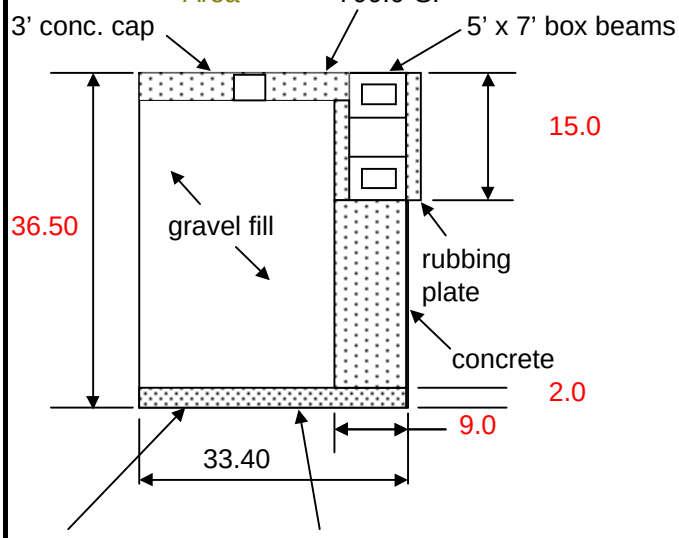

Area = 876.0 SF

Note: For quantities change the RED values in the cells of the dimensioned cross section shown.

Cast-in-Place Concrete

3' conc. cap	=	77	CY
concrete	=	163	CY
Total	=	240	CY
for 7 cells	=	1,680	CY
Tremie concrete	=	65	CY
for 7 cells	=	455	CY
Precast Concrete			
5'x7' beam	=	889	CY
rubbing pl.	=	500	CY
Total	=	1,389	CY
Gravel fill	=	819	CY
for 7 cells	=	5,733	CY
Sheet Piling	=	3,830	SF
for 7 cells	=	26,809	SF

Upstream Guidewall Cell, Large

(typical)

Area = 2,124.0 SF

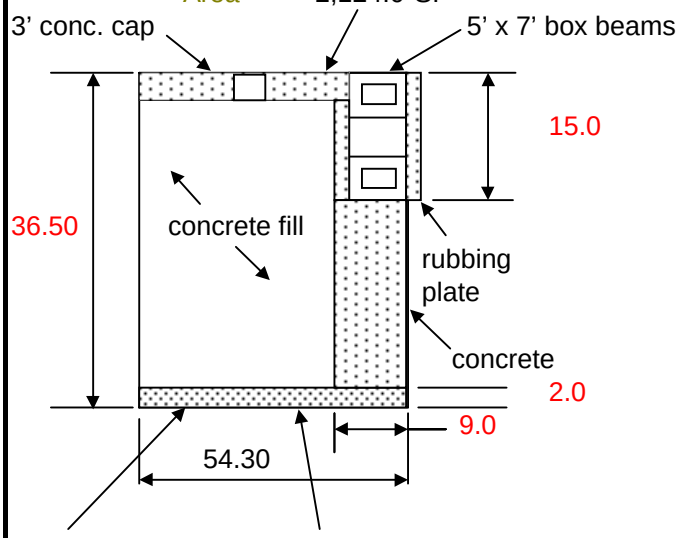

Area = 2,316.0 SF

Note: For quantities change the RED values in the cells of the dimensioned cross section shown.

Cast-in-Place Concrete

3' conc. cap	=	235	CY
concrete	=	207	CY
Total	=	442	CY
Tremie concrete	=	172	CY
Permanent Cell Fill		2,477	CY
Sheet Piling	=	6,226	SF

LOCK AND DAM NO.22, LOCATION 4, TYPE A
1200' LOCK ALTERNATIVE (ROCK FOUNDED)

Subject		Date
L/D 22 Location 3 Quantities for Type B Lock, Crane-In Construcion		Sep 96
Computed by Michael Cummings	Checked	Sheet 5 of 6

Downstream Guidewall Cell, Small

(typical)

Area = 700.0 SF

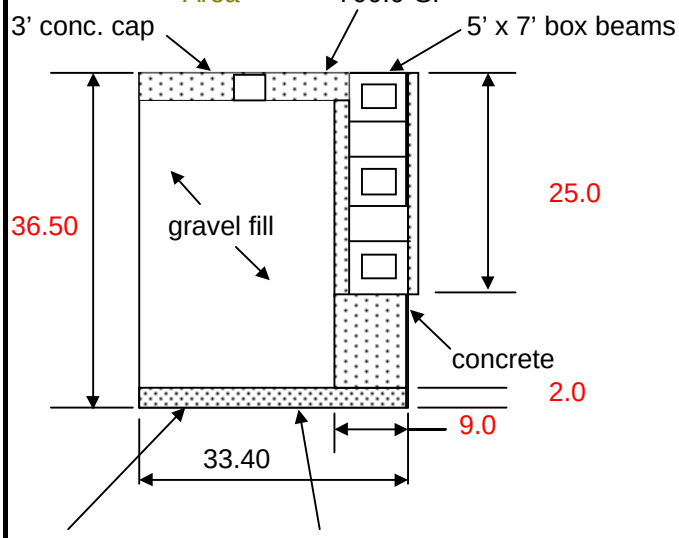

Area = 876.0 SF

Note: For quantities change the RED values in the cells of the dimensioned cross section shown.

Cast-in-Place Concrete			
3' conc. cap	=	77	CY
concrete	=	115	CY
Total	=	192	CY
for 14 cells	=	2,684	CY
Tremie concrete	=	65	CY
for 14 cells	=	910	CY
Precast Concrete			
5'x7' beam	=	2,667	CY
rubbing pl.	=	1,667	CY
Total	=	4,333	CY
Gravel fill	=	819	CY
for 14 cells	=	11,466	CY
Sheet Piling	=	3,830	SF
for 14 cells	=	53,619	SF

Downstream Guidewall Cell, Large

(typical)

Area = 2,124.0 SF

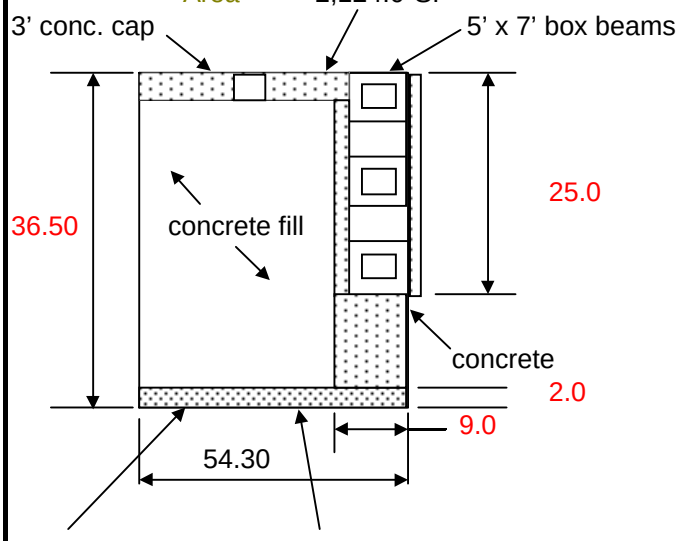

Area = 2,316.0 SF

Note: For quantities change the RED values in the cells of the dimensioned cross section shown.

Cast-in-Place Concrete			
3' conc. cap	=	235	CY
concrete	=	368	CY
Total	=	603	CY
Tremie concrete	=	172	CY
Permanent Cell Fill		2,477	CY
Sheet Piling	=	6,226	SF

LOCK AND DAM NO.22, LOCATION 4, TYPE A
1200' LOCK ALTERNATIVE (ROCK FOUNDED)

Subject		Date
L/D 22 Location 3 Quantities for Type B Lock, Crane-In Construcion		Sep 96
Computed by Michael Cummings	Checked	Sheet 6 of 6

LOCK GUIDEWALLS :

A. UPSTREAM GUIDEWALL

1. Cast-in-place concrete

Volume = 2,122 CY

2. Precast concrete

Volume = 1,389 CY

3. Gravel Fill

Volume = 5,733 CY

4. Sheet Piling

Area = 33,036 SF

5. Permanent Cell Fill

Volume = 2,477 CY

6. Tremie Concrete

Volume = 627 CY

B. DOWNSTREAM GUIDEWALL

1. Cast-in-place concrete

Volume = 3,287 CY

2. Precast concrete

Volume = 4,333 CY

3. Gravel Fill

Volume = 11,466 CY

4. Sheet Piling

Area = 59,845 SF

5. Permanent Cell Fill

Volume = 2,477 CY

6. Tremie Concrete

Volume = 1,082 CY

Guidewall Summary

Total Cast-in-Place Concrete	5,409	CY
Total Precast Concrete	5,722	CY
Total Gravel Fill	17,199	CY
Total Sheet Piling	92,881	SF
Total Permanent Cell Fill	4,954	CY
Total Tremie Concrete	1,709	CY

LOCK AND DAM NO.22, LOCATION 4, TYPE A
1200' LOCK ALTERNATIVE (ROCK FOUNDED)

Important Elevations

Location	Top of Wall	Rock Elevation	Elevation "Q"
L/D 14	577.50	547.90	559.00
L/D 20	488.00	460.00	465.50
L/D 22	471.50	435.00	444.50

		Elevation "O"	Elevation "Q"
L/D 12	603.00	561.70	554.70
L/D 13	592.00	550.70	543.70
L/D 16	554.00	514.70	507.70
L/D 17	548.00	506.70	499.70
L/D 18	537.50	495.90	488.90
L/D 21	483.50	437.00	431.00

LOCK AND DAM NO.22, LOCATION 4, TYPE B
1200' LOCK ALTERNATIVE (ROCK FOUNDED)

ACCOUNT CODE	ITEM	QUANTITY	UNIT	UNIT PRICE ($'s)	AMOUNT ($1,000's)
01.	**LANDS AND DAMAGES**				
	REAL ESTATE	1	JOB	SUM	20
04.	**DAMS**				
	DEMOLITION (TAINTER GATE BAY NO.1)	1	JOB	SUM	1,504
	CONCRETE (TIE-IN TO EXISTING LOCK)	362	CY	280.00	101
	MISCELLANEOUS	1	JOB	SUM	150
	REPLACEMENT TAINTER GATE	1	JOB	SUM	10,200
	04 DAMS SUBTOTAL				11,955
05.	**LOCKS**				
	SITEWORK				
	MOBILIZATION	1	JOB	SUM	8,000
	DEMOLITION (AUXILIARY LOCK AREA)	1	JOB	SUM	5,700
	DREDGING	86,500	CY	4.50	389
	ROCK EXCAVATION	50,000	CY	45	2,250
	EXTENSION OF EXISTING UPSTREAM GUIDEWALL	1	JOB	SUM	7,700
	COFFERDAM FILL	167,280	CY	14.50	2,426
	COFFERDAM DEWATERING	1	JOB	SUM	8,000
	CONCRETE				
	CAST IN PLACE REINFORCED CONCRETE	83,900	CY	280	23,492
	GRAVEL FILL	14,600	CY	15.00	219
	METALS				
	SHEET PILING (CLOSURE, PS31)	36,500	SF	25.00	913
	STRUCTURAL STEEL (GATES, VALVES, TRASHRACKS)	1	JOB	SUM	3,250
	STRUCTURAL STEEL (MISCELLANEOUS - LADDERS, ETC.)	1	JOB	SUM	2,500
	ELECTRICAL				
	ELECTRICAL SYSTEM	1	JOB	SUM	4,700
	MECHANICAL				
	GATE AND VALVE OPERATING MACHINERY	1	JOB	SUM	2,750
	MECHANICAL SYSTEMS	1	JOB	SUM	3,200
	MISCELLANEOUS	1	JOB	SUM	9,022
	05 LOCKS SUBTOTAL				84,510
05.60.	**GUIDEWALLS**				
	CONCRETE				
	CAST IN PLACE REINFORCED CONCRETE	4,263	CY	280.00	1,194
	PRECAST CONCRETE BEAMS (W/REINFORCEMENT)	8,960	LF	1,170.00	10,483
	TREMIE CONCRETE	1,709	CY	210.00	359
	METALS				
	SHEETPILING FOR CELLS (PS31)	75,323	SF	25.00	1,883
	STRUCTURAL STEEL	1	JOB	SUM	900
	05.60 GUIDEWALLS SUBTOTAL				14,819
09.	**CHANNEL WORK**	1	JOB	SUM	4,667
	PROJECT SUBTOTAL				115,972
	CONTINGENCIES 25%				28,993
	PROJECT SUBTOTAL WITH CONTINGENCIES				145,000
30.	**PLANNING, ENGINEERING, AND DESIGN (10%)**				15,000
31.	**CONSTRUCTION MANAGEMENT (10%)**				15,000
	PROJECT TOTAL				175,000

LOCK AND DAM NO.22, LOCATION 4, TYPE B
1200' LOCK ALTERNATIVE (ROCK FOUNDED)

Subject	ROCK FOUNDED LOCKS: L/D 22 Location 4 Quantities for Type B Lock, Crane-In Construction	Date Sep 96
Computed by Michael Cummings	Checked	Sheet 1 of 7

Crane - In Gate Monolith

Note: For quantities change the Red values in the cells of the dimensioned cross section shown.

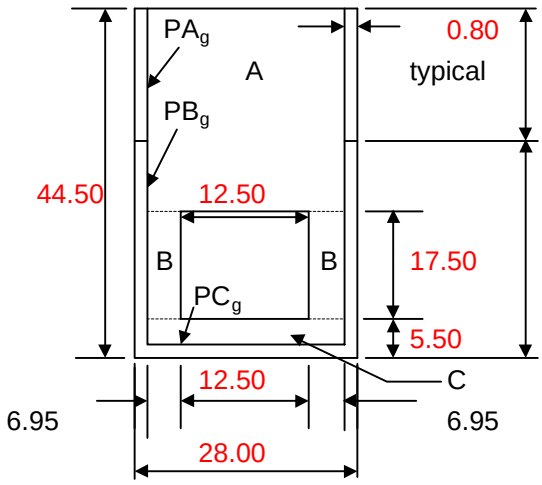

Cast in place concrete

A_g =	567.6	ft^2	
B_g =	243.3	ft^2	
C_g =	124.1	ft^2	
D_g =	218.8	ft^2	CULVERT
Total =	934.9	ft^2	

Pre-cast concrete

PA_g =	28.8	ft^2
PB_g =	42.4	ft^2
PC_g =	21.1	ft^2
Total =	92.3	ft^2

hght chk = 44.50 left
hght chk = 44.50 right

DS lngth = 250.0 ft

Crane - in Lock Wall

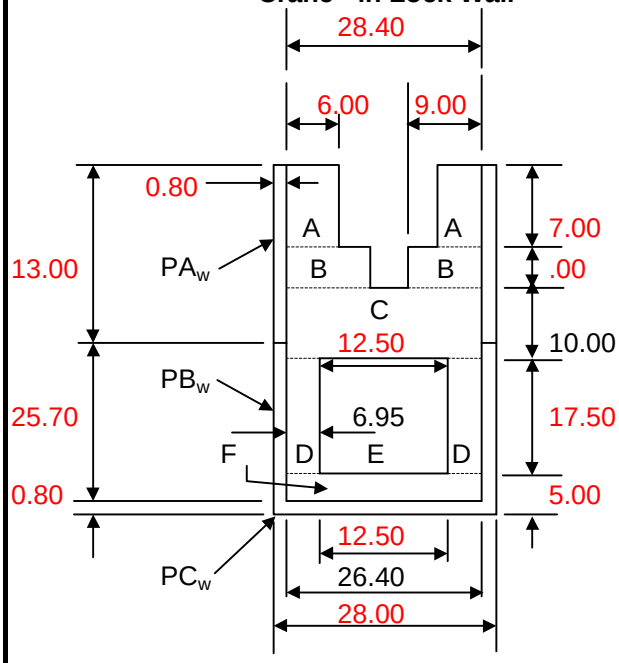

Cast in place concrete

A_w =	84.00	ft^2	
B_w =	.00	ft^2	
C_w =	284.00	ft^2	
D_w =	243.25	ft^2	
E_w =	218.75	ft^2	CULVERT
F_w =	110.88	ft^2	
Total =	722.13	ft^2	

Pre-cast concrete

PA_w =	20.8	ft^2
PB_w =	42.4	ft^2
PC_w =	21.1	ft^2
Total =	84.3	ft^2

hght chk = 39.50 left
hght chk = 39.50 right

RS Wall = 975.0 ft LS Wall = 465.0 ft

L224br

LOCK AND DAM NO.22, LOCATION 4, TYPE B
1200' LOCK ALTERNATIVE (ROCK FOUNDED)

Subject		Date
L/D 22 Location 4 Quantities for Type B Lock, Crane-In Construction		Sep 96
Computed by Michael Cummings	Checked	Sheet 2 of 7

Typical cell for cofferdam

Area = 1,512.0 ft^2

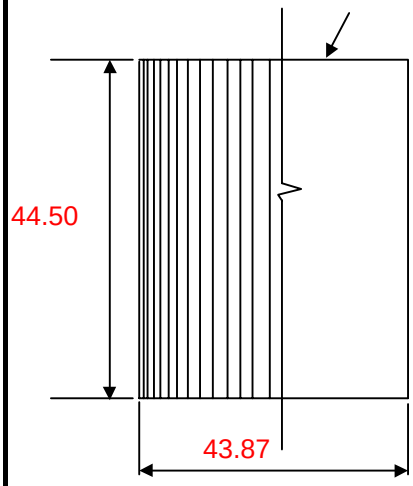

Pile type: PS31
Choose PSA23, PS27.5 or PS31

Area between cells:

Area =	694.0	ft^2
Distance =	14.66	ft
Length =	1.64	ft
Number in cell =	84	piles
No. in space =	19	piles
US Length =	110.0	ft
DS Length =	110.0	ft

Cast In Place Gate Monolith

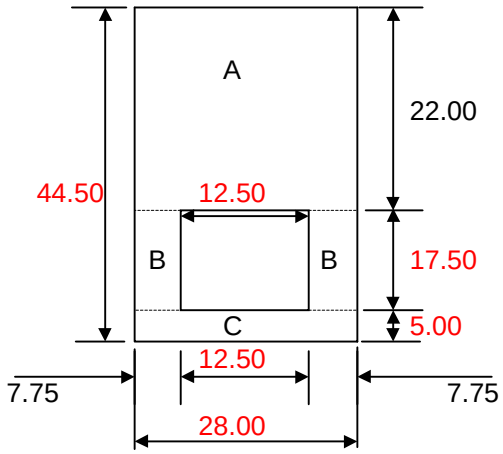

Note: For quantities change the RED values in the cells of the dimensioned cross section shown.

Cast in place concrete

A_g =	616.0	ft^2	
B_g =	271.3	ft^2	
C_g =	140.0	ft^2	
D_g =	218.8	ft^2	CULVERT
Total =	1,027.3	ft^2	

US lngth = 265.0 ft

hght chk =	44.50	left
hght chk =	44.50	right

L224br

LOCK AND DAM NO.22, LOCATION 4, TYPE B
1200' LOCK ALTERNATIVE (ROCK FOUNDED)

Subject		Date
L/D 22 Location 4 Quantities for Type B Lock, Crane-In Construction		Sep 96
Computed by Michael Cummings	Checked	Sheet 3 of 7

LOCK CHAMBER WALLS:

A. WALL MONOLITHS

1. River side walls

(a) Cast in place concrete

Volume = 26,076.9 CY

(b) Precast concrete

Volume = 3,044.9 CY

1. Land side walls

(a) Cast in place concrete

Volume = 12,436.7 CY

(b) Precast concrete

Volume = 1,452.2 CY

B. GATE MONOLITHS

1. Upstream cast in place concrete

Volume = 20,164.5 CY

2. Upstream precast concrete

Volume = .0 CY

1. Downstream cast in place concrete

Volume = 17,313.5 CY

2. Downstream precast concrete

Volume = 1,709.6 CY

COFFERDAMS:

1. Cofferdam #1, Upstream

Number = 2.0 cells

Total = 412.0 piles

2. Cofferdam #2, Upstream

Number = 2.0 cells

Total = 14,543.0 CY fill volume

SILLS:

Length = 120.0 ft
Width = 111.0 ft
Height = 8.0 ft

Volume = 7,893.3 CY

Subject		Date
L/D 22 Location 4 Quantities for Type B Lock, Crane-In Construcion		Sep 96
Computed by Michael Cummings	Checked	Sheet 4 of 7

SUMMERY:

CONCRETE (Cast in place)

A.	Lockwalls =	38,513.6	CY
B.	Gate monoliths =	37,478.1	CY
C.	Sills =	7,893.3	CY
	Total =	83,900.0	CY

PRECAST CONCRETE

A.	Lockwalls =	4,497.1	CY
B.	Gate monoliths =	1,709.6	CY
	Total =	6,300.0	CY

SHEETPILES

A.	Required number for cofferdams =	412.0	piles
B.	Required number for walls =	0	piles
	Total =	500.0	CY
	Total =	36,500.0	SF of piling

FILL

A.	Required fill for cofferdams =	14,543.0	CY
	Total =	14,600.0	CY

LOCK AND DAM NO.22, LOCATION 4, TYPE B
1200' LOCK ALTERNATIVE (ROCK FOUNDED)

Subject		Date
L/D 22 Location 4 Quantities for Type B Lock, Crane-In Construcion		Sep 96
Computed by Michael Cummings	Checked	Sheet 5 of 7

Upstream Guidewall Cell, Small

(typical)

Area = 700.0 SF

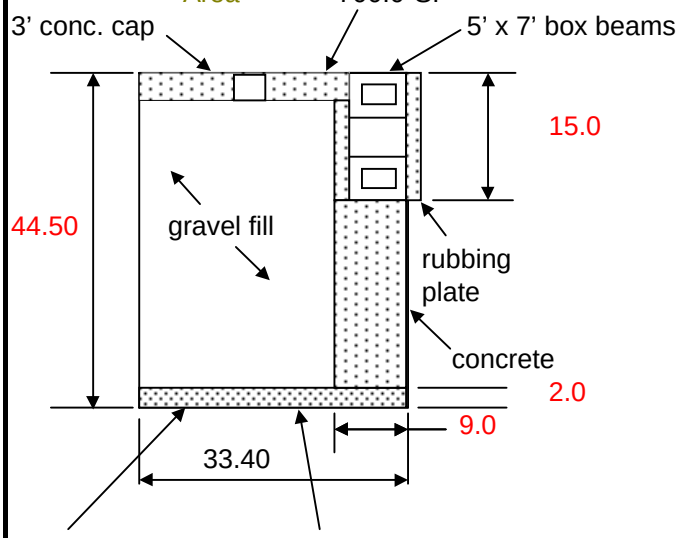

Area = 876.0 SF

Note: For quantities change the RED values in the cells of the dimensioned cross section shown.

Cast-in-Place Concrete			
3' conc. cap	=	77	CY
concrete	=	220	CY
Total	=	296	CY
for 7 cells	=	2,074	CY
Tremie concrete	=	65	CY
for 7 cells	=	455	CY
Precast Concrete			
5'x7' beam	=	889	CY
rubbing pl.	=	500	CY
Total	=	1,389	CY
Gravel fill	=	1,027	CY
for 7 cells	=	7,189	CY
Sheet Piling	=	4,669	SF
for 7 cells	=	32,685	SF

Upstream Guidewall Cell, Large

(typical)

Area = 2,124.0 SF

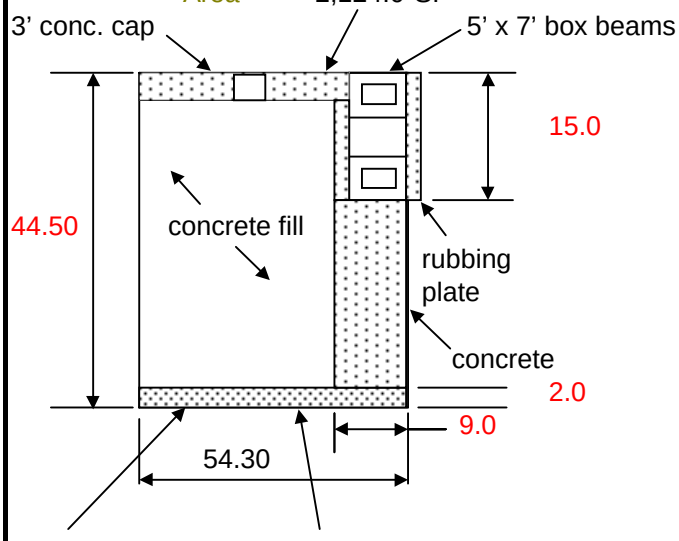

Area = 2,316.0 SF

Note: For quantities change the RED values in the cells of the dimensioned cross section shown.

Cast-in-Place Concrete			
3' conc. cap	=	235	CY
concrete	=	281	CY
Total	=	516	CY
Tremie concrete	=	172	CY
Permanent Cell Fill		3,106	CY
Sheet Piling	=	7,591	SF

LOCK AND DAM NO.22, LOCATION 4, TYPE B
1200' LOCK ALTERNATIVE (ROCK FOUNDED)

Subject		Date
L/D 22 Location 4 Quantities for Type B Lock, Crane-In Construcion		Sep 96
Computed by Michael Cummings	Checked	Sheet 6 of 7

Downstream Guidewall Cell, Small

(typical)

Area = 700.0 SF

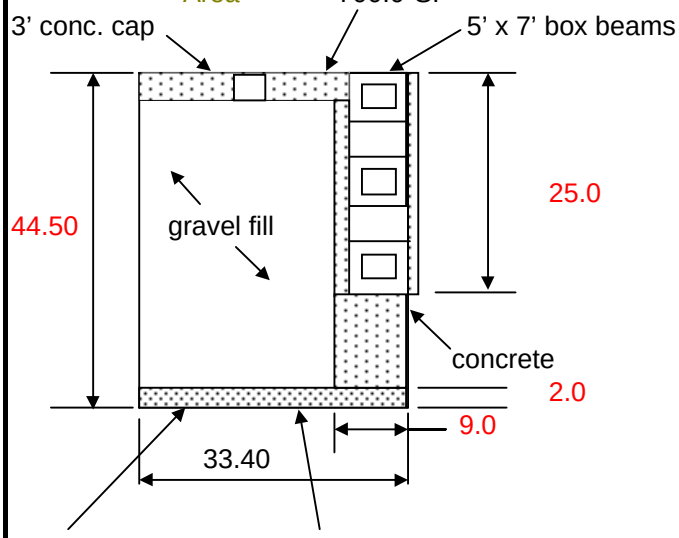

Area = 876.0 SF

Note: For quantities change the RED values in the cells of the dimensioned cross section shown.

Cast-in-Place Concrete			
3' conc. cap	=	77	CY
concrete	=	171	CY
Total	=	248	CY
for 14 cells	=	3,471	CY
Tremie concrete	=	65	CY
for 14 cells	=	910	CY
Precast Concrete			
5'x7' beam	=	2,667	CY
rubbing pl.	=	1,667	CY
Total	=	4,333	CY
Gravel fill	=	1,027	CY
for 14 cells	=	14,378	CY
Sheet Piling	=	4,669	SF
for 14 cells	=	65,371	SF

Downstream Guidewall Cell, Large

(typical)

Area = 2,124.0 SF

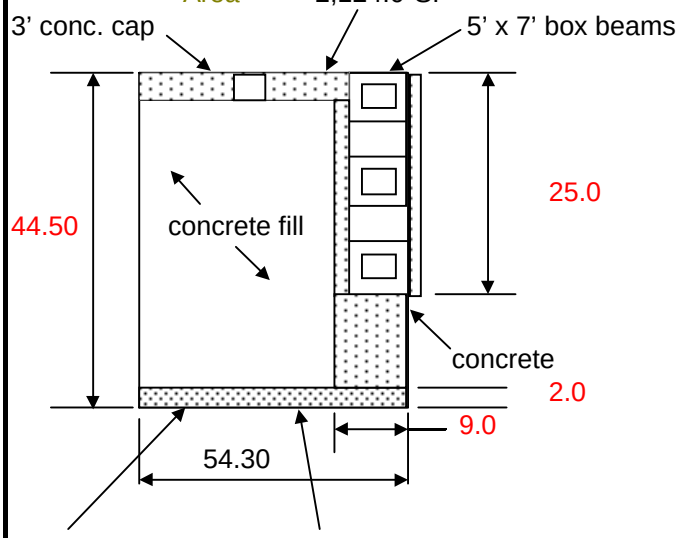

Area = 2,316.0 SF

Note: For quantities change the RED values in the cells of the dimensioned cross section shown.

Cast-in-Place Concrete			
3' conc. cap	=	235	CY
concrete	=	442	CY
Total	=	677	CY
Tremie concrete	=	172	CY
Permanent Cell Fill		3,106	CY
Sheet Piling	=	7,591	SF

LOCK AND DAM NO.22, LOCATION 4, TYPE B
1200' LOCK ALTERNATIVE (ROCK FOUNDED)

Subject		Date
L/D 22 Location 4 Quantities for Type B Lock, Crane-In Construcion		Sep 96
Computed by Michael Cummings	Checked	Sheet 7 of 7

LOCK GUIDEWALLS :

A. UPSTREAM GUIDEWALL

1. Cast-in-place concrete

Volume = 2,590 CY

2. Precast concrete

Volume = 1,389 CY

3. Gravel Fill

Volume = 7,189 CY

4. Sheet Piling

Area = 40,277 SF

5. Permanent Cell Fill

Volume = 3,106 CY

6. Tremie Concrete

Volume = 627 CY

B. DOWNSTREAM GUIDEWALL

1. Cast-in-place concrete

Volume = 4,148 CY

2. Precast concrete

Volume = 4,333 CY

3. Gravel Fill

Volume = 14,378 CY

4. Sheet Piling

Area = 72,962 SF

5. Permanent Cell Fill

Volume = 3,106 CY

6. Tremie Concrete

Volume = 1,082 CY

Guidewall Summary

Total Cast-in-Place Concrete	6,738	CY
Total Precast Concrete	5,722	CY
Total Gravel Fill	21,567	CY
Total Sheet Piling	113,239	SF
Total Permanent Cell Fill	6,212	CY
Total Tremie Concrete	1,709	CY

LOCK AND DAM NO.22, LOCATION 4, TYPE C
1200' LOCK ALTERNATIVE (ROCK FOUNDED)

ACCOUNT CODE	ITEM	QUANTITY	UNIT	UNIT PRICE ($'s)	AMOUNT ($1,000's)
01.	**LANDS AND DAMAGES**				
	REAL ESTATE	1	JOB	SUM	20
04.	**DAMS**				
	DEMOLITION (TAINTER GATE BAY NO.1)	1	JOB	SUM	1,504
	CONCRETE (TIE-IN TO EXISTING LOCK)	362	CY	280.00	101
	MISCELLANEOUS	1	JOB	SUM	150
	REPLACEMENT TAINTER GATE	1	JOB	SUM	10,200
	04 DAMS SUBTOTAL				11,955
05.	**LOCKS**				
	SITEWORK				
	MOBILIZATION	1	JOB	SUM	8,000
	DEMOLITION (AUXILIARY LOCK AREA)	1	JOB	SUM	5,700
	DREDGING	86,500	CY	4.50	389
	ROCK EXCAVATION	50,000	CY	45	2,250
	EXTENSION OF EXISTING UPSTREAM GUIDEWALL	1	JOB	SUM	7,700
	COFFERDAM FILL	167,280	CY	14.50	2,426
	COFFERDAM DEWATERING	1	JOB	SUM	8,000
	CONCRETE				
	CAST IN PLACE REINFORCED CONCRETE	30,300	CY	280	8,484
	GRAVEL FILL	62,000	CY	15.00	930
	METALS				
	SHEET PILING (CLOSURE, PS31)	280,200	SF	25.00	7,005
	STRUCTURAL STEEL (GATES, VALVES, TRASHRACKS)	1	JOB	SUM	3,250
	STRUCTURAL STEEL (MISCELLANEOUS - LADDERS, ETC.)	1	JOB	SUM	2,500
	ELECTRICAL				
	ELECTRICAL SYSTEM	1	JOB	SUM	4,700
	MECHANICAL				
	GATE AND VALVE OPERATING MACHINERY	1	JOB	SUM	2,750
	MECHANICAL SYSTEMS	1	JOB	SUM	3,200
	MISCELLANEOUS	1	JOB	SUM	9,022
	05 LOCKS SUBTOTAL				76,306
05.60.	**GUIDEWALLS**				
	CONCRETE				
	CAST IN PLACE REINFORCED CONCRETE	5,409	CY	280.00	1,515
	PRECAST CONCRETE BEAMS (W/REINFORCEMENT)	8,960	LF	1,170.00	10,483
	TREMIE CONCRETE	1,709	CY	210.00	359
	METALS				
	SHEETPILING FOR CELLS (PS31)	92,881	SF	25.00	2,322
	STRUCTURAL STEEL	1	JOB	SUM	900
	05.60 GUIDEWALLS SUBTOTAL				15,579
09.	**CHANNEL WORK**	1	JOB	SUM	4,133
	PROJECT SUBTOTAL				107,993
	CONTINGENCIES 25%				26,998
	PROJECT SUBTOTAL WITH CONTINGENCIES				135,000
30.	**PLANNING, ENGINEERING, AND DESIGN (10%)**				14,000
31.	**CONSTRUCTION MANAGEMENT (10%)**				14,000
	PROJECT TOTAL				163,000

LOCK AND DAM NO.22, LOCATION 4, TYPE C
1200' LOCK ALTERNATIVE (ROCK FOUNDED)

Subject	ROCK FOUNDED LOCKS: L/D 22 Location 4, Quantities for Type C Lock	Date Sep 96
Computed by Michael Cummings	Checked	Sheet 1 of 6

Crane-In Gate Monolith

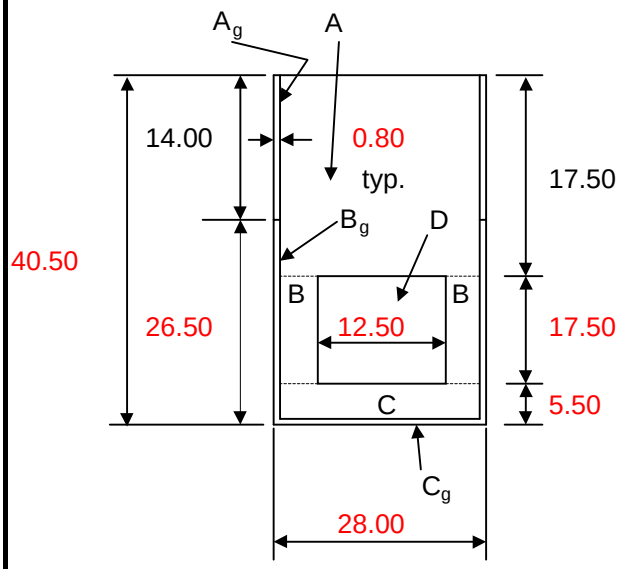

US lngth = .0 DS lngth = 250.0

Note: For quantities change the values in the cells of the dimensioned cross section shown. RED characters can be redimensioned.

AREAS: Cast concrete, one monolith

A =	462.0	ft^2	
B =	243.3	ft^2	
C =	124.1	ft^2	
D =	218.8	ft^2	CULVERT
Total =	829.3	ft^2	

AREAS: Precast concrete, one monolith

A_g =	22.4	ft^2
B_g =	42.4	ft^2
C_g =	21.1	ft^2
Total =	85.9	ft^2

hght chk = 40.50 right side
hght chk = 40.50 left side

Typical sheet pile cell for the lockwall

Area = 661.0 ft^2

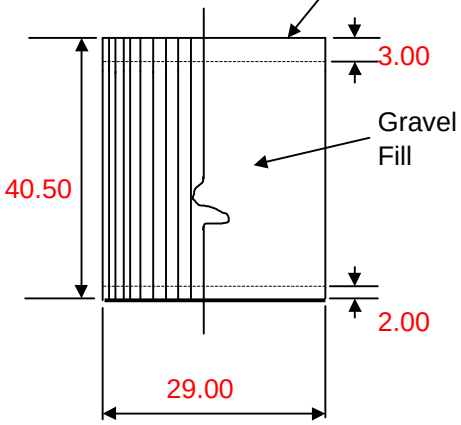

Pile type: PSA23 Choose PSA23, PS27.5, PS31

Area between cells:

Area =	236.0	ft^2
distance =	6.03	ft
Length =	1.33	ft of a single pile
Number in cell =	69	piles
No. in space =	22	piles

LS lngth = 465.0 RS lngth = 975.0

Typical cell of cofferdam

Area = 1,521.0 ft^2

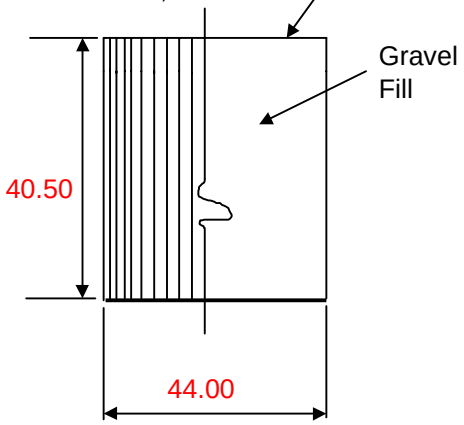

Pile type: PS31 Choose PSA23, PS27.5, PS31

Area between cells:

Area =	694.0	ft^2
distance =	14.66	ft
Length =	1.64	ft of a single pile
Number in cell =	84	piles
No. in space =	38	piles

US lngth = 110.0 DS lngth = 110.0

LOCK AND DAM NO.22, LOCATION 4, TYPE C
1200' LOCK ALTERNATIVE (ROCK FOUNDED)

Subject		Date
L/D 22 Location 4, Quantities for Type C Lock		Sep 96
Computed by Michael Cummings	Checked	Sheet 2 of 6

LOCK CHAMBER WALLS:

A. SHEETPILE CELLS:

1. River side walls:

(a) No. of cells = 28.0
Total = 2,548.0 piles

(b) Volume of Fill required:
Volume = 33,022.9 CY

2. Land side walls:

(a) No. of cells = 14.0
Total = 1,274.0 piles

Volume of Fill required:
Volume = 16,511.4 CY

Total piles = 3,822.0 **Total Fill Volume =** 49,535.0 CY

Lock wall concrete caps and tremie concrete:
Volume = 6,976.7 CY

B. GATE MONOLITHS: Gross estimate of concrete, does not include any machinery spaces

1. Upstream cast in place concrete:
Volume = .0 CY

2. Downstream cast in place concrete:
Volume = 15,358.0 CY

(a). Upstream Pre-cast concrete
Volume = 0 CY

(b). Upstream Pre-cast concrete
Volume = 795.6 CY

COFFERDAMS:

1. Cofferdam: #1, Upstream

Number = 2.0 cells
Total = 488.0 piles

2. Cofferdam: #2, Downstream

Number = 2.0 cells
Total Fill Volume = 12,461.0 CY

PRE-CAST (rubbing surface on intermediate lock wall)

Thickness	2.0 ft	Length	465.0 ft
Height	32.7 ft		

Total = 2252.7 CY

BUMPER SYSTEM:

A. Downstream:
Volume = .0 CY

B. Upstream:
Volume = .0 CY

SILLS:

Length	120.0 ft
Width	111.0 ft
Height	8.0 ft

SILLS:
Volume = 7,893.3 CY

Subject		Date
L/D 22 Location 4, Quantities for Type C Lock		Sep 96
Computed by Michael Cummings	Checked	Sheet 3 of 6

GUIDEWALLS: Information is on another Excel sheet

SUMMARY:

CONCRETE: (Cast in place)

A.	Lockwalls =	6,976.7	CY
B.	Gate monoliths =	15,358.0	CY
C.	Sills =	7,893.3	CY
	Total =	30,300.0	CY

PRE-CAST CONCRETE:

A.	Gate monoliths =	795.6	CY
B.	Precast on intermediate lockwall =	2,252.7	CY
	Total =	3,100.0	CY

SHEETPILES:

A.	Required number for cofferdam =	488.0	piles
B.	Required number for lock walls =	3,822.0	piles
	Total =	4,400.0	piles
	Total =	280,200.0	SF of piling

FILL:

A.	Required for the main lock walls =	49,535.0	CY
B.	Required for the cofferdams =	12,461.0	CY
	Total =	62,000.0	CY

LOCK AND DAM NO.22, LOCATION 4, TYPE C
1200' LOCK ALTERNATIVE (ROCK FOUNDED)

Subject		Date
L/D 22 Location 4 Quantities for Type C Lock, Crane-In Construcion		Sep 96
Computed by Michael Cummings	Checked	Sheet 4 of 6

Upstream Guidewall Cell, Small

(typical)

Area = 700.0 SF

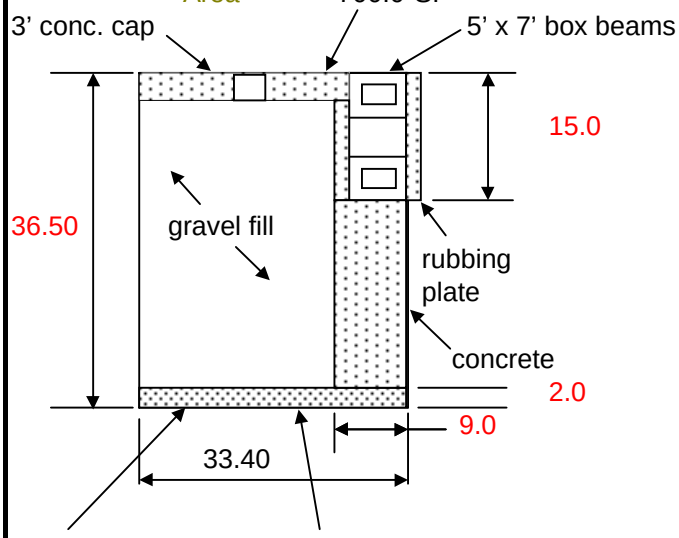

Area = 876.0 SF

Note: For quantities change the RED values in the cells of the dimensioned cross section shown.

Cast-in-Place Concrete

3' conc. cap	=	77	CY
concrete	=	163	CY
Total	=	240	CY
for 7 cells	=	1,680	CY
Tremie concrete	=	65	CY
for 7 cells	=	455	CY
Precast Concrete			
5'x7' beam	=	889	CY
rubbing pl.	=	500	CY
Total	=	1,389	CY
Gravel fill	=	819	CY
for 7 cells	=	5,733	CY
Sheet Piling	=	3,830	SF
for 7 cells	=	26,809	SF

Upstream Guidewall Cell, Large

(typical)

Area = 2,124.0 SF

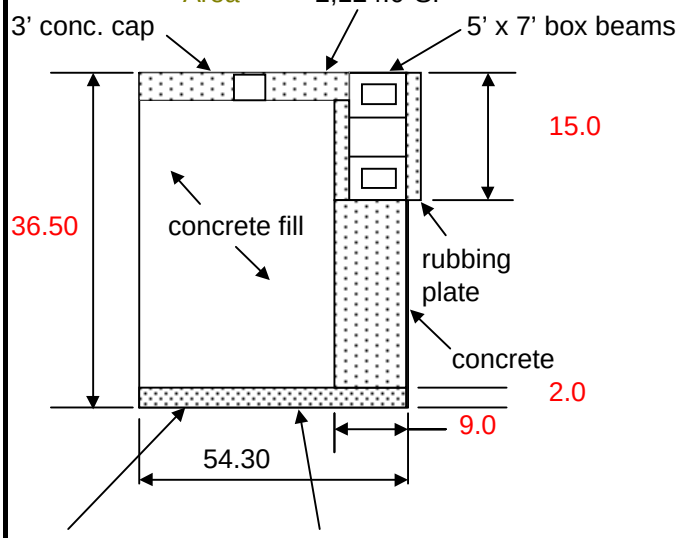

Area = 2,316.0 SF

Note: For quantities change the RED values in the cells of the dimensioned cross section shown.

Cast-in-Place Concrete

3' conc. cap	=	235	CY
concrete	=	207	CY
Total	=	442	CY
Tremie concrete	=	172	CY
Permanent Cell Fill		2,477	CY
Sheet Piling	=	6,226	SF

LOCK AND DAM NO.22, LOCATION 4, TYPE C
1200' LOCK ALTERNATIVE (ROCK FOUNDED)

Subject		Date
L/D 22 Location 4 Quantities for Type C Lock, Crane-In Construcion		Sep 96
Computed by Michael Cummings	Checked	Sheet 5 of 6

Downstream Guidewall Cell, Small

(typical)

Area = 700.0 SF

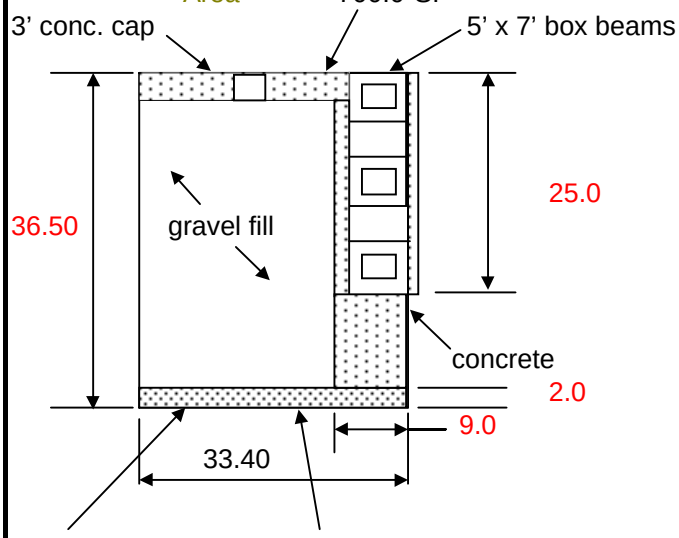

Area = 876.0 SF

Note: For quantities change the RED values in the cells of the dimensioned cross section shown.

Cast-in-Place Concrete			
3' conc. cap	=	77	CY
concrete	=	115	CY
Total	=	192	CY
for 14 cells	=	2,684	CY
Tremie concrete	=	65	CY
for 14 cells	=	910	CY
Precast Concrete			
5'x7' beam	=	2,667	CY
rubbing pl.	=	1,667	CY
Total	=	4,333	CY
Gravel fill	=	819	CY
for 14 cells	=	11,466	CY
Sheet Piling	=	3,830	SF
for 14 cells	=	53,619	SF

Downstream Guidewall Cell, Large

(typical)

Area = 2,124.0 SF

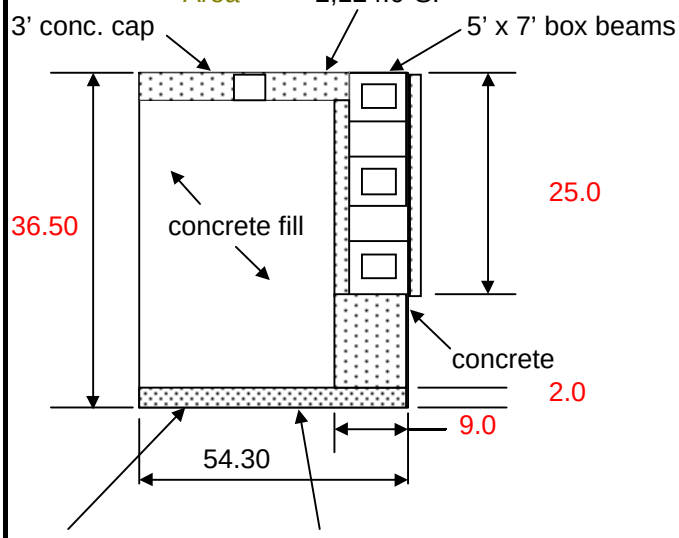

Area = 2,316.0 SF

Note: For quantities change the RED values in the cells of the dimensioned cross section shown.

Cast-in-Place Concrete			
3' conc. cap	=	235	CY
concrete	=	368	CY
Total	=	603	CY
Tremie concrete	=	172	CY
Permanent Cell Fill		2,477	CY
Sheet Piling	=	6,226	SF

LOCK AND DAM NO.22, LOCATION 4, TYPE C
1200' LOCK ALTERNATIVE (ROCK FOUNDED)

Subject		Date
L/D 22 Location 4 Quantities for Type C Lock, Crane-In Construcion		Sep 96
Computed by Michael Cummings	Checked	Sheet 6 of 6

LOCK GUIDEWALLS :

A. UPSTREAM GUIDEWALL

1. Cast-in-place concrete

Volume = 2,122 CY

2. Precast concrete

Volume = 1,389 CY

3. Gravel Fill

Volume = 5,733 CY

4. Sheet Piling

Area = 33,036 SF

5. Permanent Cell Fill

Volume = 2,477 CY

6. Tremie Concrete

Volume = 627 CY

B. DOWNSTREAM GUIDEWALL

1. Cast-in-place concrete

Volume = 3,287 CY

2. Precast concrete

Volume = 4,333 CY

3. Gravel Fill

Volume = 11,466 CY

4. Sheet Piling

Area = 59,845 SF

5. Permanent Cell Fill

Volume = 2,477 CY

6. Tremie Concrete

Volume = 1,082 CY

Guidewall Summary

Total Cast-in-Place Concrete	5,409	CY
Total Precast Concrete	5,722	CY
Total Gravel Fill	17,199	CY
Total Sheet Piling	92,881	SF
Total Permanent Cell Fill	4,954	CY
Total Tremie Concrete	1,709	CY

LOCK AND DAM NO. 21, LOCATION 2, TYPE B
(PILE-FOUNDED)

CCOUNT CODE	ITEM	QUANTITY	UNIT	UNIT PRICE ($'s)	AMOUNT ($1,000's)
01.	**LANDS AND DAMAGES**				
	REAL ESTATE	1	JOB	SUM	40
04.	**DAMS**				
	04 DAMS SUBTOTAL				0
05.	**LOCKS**				
	SITEWORK				
	MOBILIZATION	1	JOB	SUM	10,650
	DEMOLITION	1	JOB	SUM	1,910
	EXCAVATION	27,090	CY	4.5	122
	BACKFILL	22,000	CY	6.25	138
	WALL FILL	11,491	CY	10.00	115
	SCOUR PROTECTION	429	TN	20.00	9
	SCOUR STONE IN LOCK FLOOR	9,030	TN	25.00	226
	FOUNDATION/LOCK DEWATERING	1	JOB	SUM	3,000
	MARINE FACILITIES, TEMP. MOORING STR.	1	JOB	SUM	3,900
	CONCRETE				
	UNDERBASE GROUTING	5,297	CY	200	1,059
	CAST IN PLACE REINFORCED CONCRETE	37,665	CY	217	8,173
	PRECAST CONCRETE	8,990	CY	400	3,596
	TREMIE CONCRETE	4,623	CY	165	763
	POST TENSION STEEL	135,000	LB	2.5	338
	FURNISH AND SET LANDING PADS	74	EA	19000	1,406
	SET PRECAST WALL UNITS	28	EA	16000	448
	FLOAT IN AND SET FLOOR UNITS	26	EA	16000	416
	FLOAT IN AND SET MITER GATE SILL	1	JOB	SUM	140
	STEEL REINFORCEMENT	2,260,000	LB	0.75	1,695
	METALS				
	SHEET PILING	57,205	SF	21.52	1,231
	WALL UNIT BRACING	1	JOB	SUM	250
	FOUNDATION PILING AND TESTING	1	JOB	SUM	5,300
	STRUCTURAL STEEL (GATES, VALVES, TRASHRACKS, BU	1	JOB	SUM	11,613
	STRUCTURAL STEEL (MISCELLANEOUS - LADDERS, ETC.	1	JOB	SUM	3,040
	ELECTRICAL				
	ELECTRICAL SYSTEM	1	JOB	SUM	4,700
	INSTRUMENTATION	1	JOB	SUM	1,250
	MECHANICAL				
	GATE AND VALVE OPERATING MACHINERY	1	JOB	SUM	2,750
	MECHANICAL SYSTEMS	1	JOB	SUM	3,200
	MISCELLANEOUS	1	JOB	SUM	1,950
	05 LOCKS SUBTOTAL				73,387
05.60.	**GUIDEWALLS**				
	SITEWORK				
	EXCAVATION	118,490	CY	4.5	533
	BACKFILL	73,640	CY	10	736
	SCOUR PROTECTION	18,900	TON	15	284
	CONCRETE				
	42" DIAMETER PILES	2,667	LF	400	1,067
	CAST IN PLACE REINFORCED CONCRETE	1,570	CY	150	236
	PRECAST BEAMS	10,900	CY	500	5,450
	PRECAST BEAM SEATS	165	CY	1000	165
	TREMIE CONCRETE	130	CY	500	65
	PERMANENT CELL FILL (C0NCRETE)	15,028	CY	200	3,006
	GROUT FOR BEAMS	490	CY	1000	490
	STEEL REINFORCEMENT	1,840,000	LB	0.75	1,380
	GRAVEL FILL	29,597	CY	10	296
	METALS				
	SHEET PILING FOR CELLS (PS31)	185,880	SF	25.00	4,647
	SHEET PILE CUTOFF WALL (PZ35)	74,714	SF	30.00	2,241
	FOUNDATION PILING		JOB	SUM	318
	POST TENSIONING	1,280	LF	30	38
	STRUCTURAL STEEL	1	JOB	SUM	4,060
	05.60 GUIDEWALLS SUBTOTAL				25,012
09.	**CHANNEL WORK**	1	JOB	SUM	2,000
	PROJECT SUBTOTAL				100,438
	CONTINGENCIES 25%				25,110
	PROJECT SUBTOTAL WITH CONTINGENCIES				126,000
30.	**PLANNING, ENGINEERING, AND DESIGN (10%)**				13,000
31.	**CONSTRUCTION MANAGEMENT (10%)**				13,000
	PROJECT TOTAL				$ 152,000

		QUANTITY CALCULATIONS									
	L/D 21 Location 2, Type B, Pile Founded							Sheet 1_ of 3____			
1	Remove existing sill down to										
	elev. 405.33	25	x	2	x	110	=	5,500.00	CF	203.70	CY
2	Remove existing 2' thick slab	95.25	x	2	x	110	=	20,955.00	CF	776.11	CY
3	Demolish existing guidewall, to										
	include timber crib and pile	502	x	30	x	53	=	798,180.00	CF	29,562.22	CY
4	Install sheet piling, PZ27	42.5	x	673	x	2	=	57,205.00	SF		
5	Excavation	6.3	x	172		675	=	731,430.00	CF	27,090.00	CY
6	Place scour stone	1.5	x	172	x	675	=	174,150.00	CF	6,450.00	CY
7	Place scour protection (riprap)	3	x	25	x	110	=	8,250.00	CF	305.56	CY
8	Install piling, HP 14 x 89										
	(54 ea per monolith @ 50' long										
	for 28 monoliths)	54	x	50	x	28	=	75,600.00	LF		
	Lockwall/floor connection										
9	HP14 x 117 stud w/welded ribs	23	x	2	=	46	EA				
	thixotropic grout @ HP studs	23.5	x	46	=	1,081.00	CF				
	thixotropic grout @ joints per ft	0.25	x	5	x	1296	=	1,620.00	CF		
10	Grout under base filling	2	x	650	x	110	=	143,000.00	CF	5,296.30	CY
11	Install piling, HP 14 x 89										
	(5 ea per floor unit @ 45' long										
	for 26 floor units	5	x	45	x	26	=	5,850.00	LF		
							=	26	EA		
12	Sand infill of floor units, large	((9.25' x 6.25' x2)+(19.75' x 6.25' x 4))x 510'					=	310,794.00	CF		
	" " " " " , small	((9.25' x 3' x 2)+(19.75' x 3' x 4)) x 66					=	19,305.00	CF		
								330,099.00	CF	12,225.89	CY
13	Concrete										
	riverward wall										
	-bottom lift (tremie)	4.5	x	23	x	603	=	62,410.50	CF		
	-2nd lift (reinforced)	4	x	28	x	603	=	67,536.00	CF		
	-3rd lift (reinforced)inside	13.5	x	7.75	x	603	=	63,088.88	CF		
	- " " " outside	13.5	x	7.75	x	603	=	63,088.88	CF		
	-4th lift (reinforced)	8.5	x	26	x	603	=	133,263.00	CF		
	-5th lift (reinforced)	4.0	x	28	x	603	=	67,536.00	CF		
	-6th lift (reinforced)outside	5.50	x	9	x	603	=	29,848.50	CF		
	- " " " inside	5.50	x	9	x	603	=	29,848.50	CF		
	-7th lift (reinforced)outside	10.0	x	9	x	603	=	54,270.00	CF		
								570,890.25		21,144.08	CY
14	Concrete										
	landward wall										
	-bottom lift (tremie)	4.5	x	23	x	603	=	62,410.50	CF		
	-2nd lift (reinforced)	4	x	28	x	603	=	67,536.00	CF		
	-3rd lift (reinforced)inside	13.5	x	7.75	x	603	=	63,088.88	CF		
	- " " " outside	13.5	x	7.75	x	603	=	63,088.88	CF		
	-4th lift (reinforced)	8.5	x	26	x	603	=	133,263.00	CF		
	-5th lift (reinforced)	4.0	x	28	x	603	=	67,536.00	CF		
	-6th lift (reinforced)outside	5.50	x	9	x	603	=	29,848.50	CF		
	- " " " inside	5.50	x	9	x	603	=	29,848.50	CF		
	-7th lift (reinforced)outside	10.0	x	9	x	603	=	54,270.00	CF		
								570,890.25		21,144.08	CY
	Total Concrete									42,288.17	CY
											Ld212bpf

LOCK AND DAM NO. 21, LOCATION 2, TYPE C
(PILE-FOUNDED)

CCOUNT CODE	ITEM	QUANTITY	UNIT	UNIT PRICE ($'s)	AMOUNT ($1,000's)
01.	**LANDS AND DAMAGES**				
	REAL ESTATE	1	JOB	SUM	40
04.	**DAMS**				
	04 DAMS SUBTOTAL				0
05.	**LOCKS**				
	SITEWORK				
	MOBILIZATION	1	JOB	SUM	10,650
	DEMOLITION	1	JOB	SUM	1,910
	EXCAVATION	20,671	CY	4.5	93
	BACKFILL	19,700	CY	10.00	197
	SCOUR PROTECTION	2,000	TN	15.00	30
	SCOUR STONE IN LOCK FLOOR	16,860	TN	15.00	253
	GRAVEL FILTER IN LOCK FLOOR	16,090	TN	20.00	322
	FOUNDATION/LOCK DEWATERING	1	JOB	SUM	3,000
	MARINE FACILITIES, TEMP. MOORING STR.	1	JOB	SUM	3,900
	CONCRETE				
	STRUCTURAL GROUTING	700	CY	200	140
	CAST IN PLACE REINFORCED CONCRETE	30,318	CY	217	6,579
	CAST IN PLACE CONNECTIONS	200	CY	725	145
	PRECAST CONCRETE	9,258	CY	400	3,703
	TREMIE CONCRETE, BASE .	3,574	CY	165	590
	PRECAST FLOOR PANELS	8,210	CY	286	2,348
	POST TENSION STEEL	185,300	LB	2.5	463
	FURNISH AND SET LANDING PADS	74	EA	19000	1,406
	SET PRECAST WALL UNITS	28	EA	16000	448
	FLOAT IN AND SET MITER GATE SILL	1	JOB	SUM	140
	STEEL REINFORCEMENT	1,819,000	LB	0.75	1,364
	METALS				
	SHEET PILING	47,110	SF	21.52	1,014
	WALL UNIT BRACING	1	JOB	SUM	250
	FOUNDATION PILING AND TESTING	1	JOB	SUM	3,487
	STRUCTURAL STEEL (GATES, VALVES, TRASHRACKS, B	1	JOB	SUM	11,613
	STRUCTURAL STEEL (MISCELLANEOUS - LADDERS, ET	1	JOB	SUM	3,040
	ELECTRICAL				
	ELECTRICAL SYSTEM	1	JOB	SUM	4,700
	INSTRUMENTATION	1	JOB	SUM	1,250
	MECHANICAL				
	GATE AND VALVE OPERATING MACHINERY	1	JOB	SUM	2,750
	MECHANICAL SYSTEMS	1	JOB	SUM	3,200
	MISCELLANEOUS	1	JOB	SUM	1,950
	05 LOCKS SUBTOTAL				70,935
05.60.	**GUIDEWALLS**				
	SITEWORK				
	EXCAVATION	118,490	CY	4.5	533
	BACKFILL	73,640	CY	10	736
	SCOUR PROTECTION	18,900	TON	15	284
	CONCRETE				
	42" DIAMETER PILES	2,667	LF	400	1,067
	CAST IN PLACE REINFORCED CONCRETE	1,570	CY	150	236
	PRECAST BEAMS	10,900	CY	500	5,450
	PRECAST BEAM SEATS	165	CY	1000	165
	TREMIE CONCRETE	130	CY	500	65
	PERMANENT CELL FILL (C0NCRETE)	15,029	CY	200	3,006
	GROUT FOR BEAMS	490	CY	1000	490
	STEEL REINFORCEMENT	1,840,000	LB	0.75	1,380
	GRAVEL FILL	29,597	CY	10	296
	METALS				
	SHEET PILING FOR CELLS (PS31)	185,880	SF	25.00	4,647
	SHEET PILE CUTOFF WALL (PZ35)	74,714	SF	30.00	2,241
	FOUNDATION PILING	1	JOB	SUM	318
	POST TENSIONING	1,280	LF	30	38
	STRUCTURAL STEEL	1	JOB	SUM	4,060
	05.60 GUIDEWALLS SUBTOTAL				25,012
09.	**CHANNEL WORK**	1	JOB	SUM	2,000
	PROJECT SUBTOTAL				97,987
	CONTINGENCIES 25%				24,497
	PROJECT SUBTOTAL WITH CONTINGENCIES				122,000
30.	**PLANNING, ENGINEERING, AND DESIGN (10%)**				12,000
31.	**CONSTRUCTION MANAGEMENT (10%)**				12,000
	PROJECT TOTAL				$ 146,000

		QUANTITY CALCULATIONS									
	L/D 21, Location 2, Type C, Pile Founded							Sheet 1_ of	3_		
1	Remove existing sill down to										
	elev. 577.83	25	x	2	x	110	=	5,500.00	CF	203.70	CY
2	Remove existing 2' thick slab	95.25	x	2	x	110	=	20,955.00	CF	776.11	CY
3	Demolish existing guidewall, to	502	x	30	x	53	=	798,180.00	CF	29,562.22	CY
	include timber crib and pile										
4	Install sheet piling, PZ27	35	x	673	x	2	=	47,110.00	SF		
5	Place scour stone (under walls)	1.5	x	60	x	600	=	54,000.00	CF	2,000.00	CY
6	Excavation	8.4	x	110	x	604	=	558,096.00	CF	20,670.22	CY
7	Install piling, HP 14 x 89										
	(24 ea per monolith @50' long										
	for 28 monoliths)	24	x	50	x	28	=	33,600.00	LF		
8	Steel footing box(1/2"steel plate)										
	riverward wall										
	20.42 lb x [(6'x3'x2)+(4'x3'x2)]=1,225 LB @ 30 locations							36,750.00	LB		
	landward wall										
	20.42 lb x [(6'x3'x2)+(4'x3'x2)]=1,225 LB @ 30 location							36,750.00	LB		
								73,500.00	LB		
9	Install piling, HP 14 x 89								or	2,722.22	TN
	for chamber floor paving blocks										
	(7 ea per joint @ 50' for 14 ea										
	joints)	50.0	x	7	x	14	=	4,900.00	LF		
10	Scour stone, (removed prior to										
	floor construction)	3	x	110	x	580	=	191,400.00	CF	7,088.89	CY
11	Filter layer	2	x	110	x	580	=	127,600.00	CF	4,725.93	CY
12	Filter gravel	2	x	110	x	580	=	127,600.00	CF	4,725.93	CY
13	Paving blocks (3'x30'x14')										
	1,260cf @ 8/row x 18 rows	1,260	x	8	x	18	=	181,440.00	CF	6,720.00	CY
14	Structural steel (per cell unit)										
	- W18 x 86 waler	86	x	154	=	13,244.00					
	- W18 x 86 brace	86	x	22	=	1,892.00					
	- C12 x 25 diagonal brace	25	x	232	=	5,800.00					
	(There are 30 cell units, 15 in each wall)					20,936.00	x	30	=	628,080.00	LB
									or	314.04	TN
15	Precast liner										
	riverward wall	28.0	x	603	x	1	=	16,884.00	CF		
	landward wall	28.0	x	603	x	1	=	16,884.00	CF		
								33,768.00	CF		
									or	1,250.67	CY
16	Precast concrete miter gate sill										
	and wall monoliths										
	Taken from quantity calc's from St. Paul District's Microstation analysis										
						- Slab volume			=	1,434.50	CY
						- Wall volume			=	771.32	CY
						- Concrete strut volume			=	17.25	CY
	Total Precast Concrete Volume for Miter Gate Sill & Wall Monoliths								=	2,223.07	CY
											Ld212cpf

LOCK AND DAM NO. 21, LOCATION 2, TYPE R
1200' LOCK ALTERNATIVE (SAND-FOUNDED)

ITEM	QUANTITY	UNIT	UNIT PRICE ($'s)	AMOUNT ($1,000's)
LANDS AND DAMAGES				
REAL ESTATE	1	JOB	SUM	150
DAMS				
04 DAMS SUBTOTAL				0
LOCKS				
SITEWORK				
MOBILIZATION	1	JOB	SUM	8,650
DEMOLITION	1	JOB	SUM	500
EXCAVATION	6,000	CY	4.5	27
SCOUR PROTECTION	2,000	TN	20	40
FOUNDATION/LOCK DEWATERING	1	JOB	SUM	3,000
MARINE FACILITIES, TEMP MOORING STRUCTURE	1	JOB	SUM	950
CONCRETE				
UNDERBASE GROUTING	2,200	CY	200	440
CAST IN PLACE REINFORCED CONCRETE	12,568	CY	280	3,519
LIGHTWEIGHT CONCRETE	6,030	CY	325	1,960
PRECAST CONCRETE	7,015	CY	400	2,806
TREMIE CONCRETE	9,178	CY	165	1,514
STONE FILL FOR IWALL CELLS	47,535	TN	20	951
GROUT FOR STONE FILLED CELLS	5,212	CY	200	1,042
SAND FILL FOR LANDWALL CELLS	23,300	CY	10.00	233
FURNISH AND SET LANDING PADS	6	EA	19000	114
FLOAT IN AND SET MITER GATE SILL	1	JOB	SUM	140
36" DIA PIPE PILES, QTY 56 PILES	4,200	LF	350	1,470
SET PRECAST WALL PANELS	48	EA	8000	384
SET PRECAST BEAMS	50	EA	3000	150
ARTICULATED CONCRETE MAT FOR FLOOR	70,000	SF	10	700
BEDDING UNDER FLOOR MAT	7,000	TN	20	140
CONCRETE REMOVAL				
METALS				
RIVER WALL SHEET PILING (PS-31)	114,282	SF	22.04	2,519
STAY IN PLACE TEMPLATES	14	EA	50,000	700
LANDWALL SHEET PILING (PS-31)	137,295	SF	19.64	2,696
Z-PILE CRADLE FOR FOAT-IN MONOLITH	29,700	SF	21.74	646
FOUNDATION PILING AND TESTING	1	JOB	SUM	1,000
H-PILING HP 12X53	5,472	VLF	33.50	183
STRUCTURAL STEEL (GATES, VALVES, TRASHRACKS)	1	JOB	SUM	4,211
STRUCTURAL STEEL (MISCELLANEOUS - LADDERS, ETC.)	1	JOB	SUM	3,040
ROCK BOLTS & SUPPORTS FOR PRECAST BEAMS	140	EA	350	49
FASTNERS FOR PRECAST PANELS	336	EA	100	34
ELECTRICAL				
ELECTRICAL SYSTEM	1	JOB	SUM	4,700
INSTRUMENTATION	1	JOB	SUM	1,250
MECHANICAL				
GATE AND VALVE OPERATING MACHINERY	1	JOB	SUM	2,750
MECHANICAL SYSTEMS	1	JOB	SUM	3,200
MISCELLANEOUS	1	JOB	SUM	1,950
05 LOCKS SUBTOTAL				57,658
GUIDEWALLS				
SITEWORK				
EXCAVATION	118490	CY	4.50	533
BACKFILL	73640	CY	10	736
SCOUR PROTECTION	18900	TN	20	378
CONCRETE				
48" DIAMETER PILES	1068	VLF	370	395
CAST IN PLACE CONCRETE	195	CY	280	55
PRESTRESSED BOX BEAMS	1	JOB	SUM	5,067
PRECAST BEAM SEATS	6	EA	22,500	135
TREMIE CONCRETE	90	CY	165	15
PERMANENT CELL FILL(CONCRETE)	3,203	CY	200	641
GROUT AND BLADDERS	5,328	CF	29.40	157
STEEL REINFORCEMENT	150,350	LB	1	150
STONE FILL FOR WALL CELLS	8,706	CY	20	174
METALS				
STEEL SHEET PILING FOR CELLS (PS-31)	60,179	SF	22.04	1,326
STEEL SHEET PILING FOR SKIRT	28,285	SF	18.35	519
STEEL H-PILING (FOR 57 FT DIA CELL)	3,958	VLF	52.50	208
ANCHOR BARS FOR BEAMS	2,160	LF	87.60	189
WALL ARMOR (14 STRIPS)	369,600	LB	4.20	1,552
STEEL RUB PLATE AND ACCESSORIES	63,600	LB	6.00	382
LADDERS AND MISC METALS	100,000	LB	3.00	300
HANDRAILLING (ALUM.)	1,400	LF	125.40	176
CHECKPOST	30	EA	1,546	46
ACCESS HATCHES	1	JOB	SUM	33
ELECTRICAL				
ELECTRICAL SYSTEM	1	JOB	SUM	78
05.60 GUIDEWALLS SUBTOTAL				13,245
CHANNEL WORK	1	JOB	SUM	680
PROJECT SUBTOTAL				71,733
CONTINGENCIES 25%				17,933
PROJECT SUBTOTAL WITH CONTINGENCIES				89,667
PLANNING, ENGINEERING, AND DESIGN (10%)				8,967
CONSTRUCTION MANAGEMENT (10%)				8,967
PROJECT TOTAL				$ 107,600
SIC LOCK COST (O4., 05., 05.60.) WITH CONTINGENCIES, PED, & CM*				**$ 108,000**

LOCK AND DAM NO. 21, LOCATION 3, TYPE B
1200' LOCK ALTERNATIVE (ROCK FOUNDED)

ACCOUNT CODE	ITEM	QUANTITY	UNIT	UNIT PRICE ($'s)	AMOUNT ($1,000's)
01.	**LANDS AND DAMAGES**				
	REAL ESTATE	1	JOB	SUM	40
04.	**DAMS**				
	REMOVAL OF EXISTING STRUCTURES	1	JOB	SUM	150
	04 DAMS SUBTOTAL				150
05.	**LOCKS**				
	SITEWORK				
	MOBILIZATION	1	JOB	SUM	10,650
	DEMOLITION	1	JOB	SUM	1,910
	EXCAVATION	48,960	CY	6.25	306
	FOUNDATION FILL AT SCOUR HOLE	0	CY	18.75	0
	WALL FILL	15,760	CY	10.00	158
	CAPSTONE	52,660	TN	25.00	1,317
	RIPRAP	33,380	TN	20.00	668
	LEVELING STONE IN LOCK FLOOR	4,580	TN	15.00	69
	GRAVEL FILTER IN LOCK FLOOR	16,606	TN	15.00	249
	GEOTEXTILE	13,740	SY	6.00	82
	FOUNDATION/LOCK DEWATERING	1	JOB	SUM	3,000
	MARINE FACILITIES, TEMP. MOORING STR.	1	JOB	SUM	3,900
	CONCRETE				
	STRUCTURAL GROUTING	450	CY	200	90
	CAST IN PLACE REINFORCED CONCRETE	76,200	CY	217	16,535
	CAST IN PLACE CONNECTIONS	964	CY	725	699
	PRECAST CONCRETE	10,700	CY	400	4,280
	TREMIE CONCRETE, BASE .	10,340	CY	165	1,706
	PRECAST FLOOR PAVERS AND STRUTS	15,450	CY	286	4,419
	SET PRECAST FLOOR BEAMS	31	EA	16000	496
	SET FLOOR PANELS	62	EA	10000	620
	STEEL REINFORCEMENT	7,614,000	LB	0.75	5,711
	METALS				
	SHEET PILING	35,700	SF	35.80	1,278
	SHEET PILE BRACING	1	JOB	SUM	350
	FOUNDATION PILING AND TESTING	209,190	LF	39.75	8,315
	STRUCTURAL STEEL (GATES, VALVES, ETC.)	1	JOB	SUM	11,613
	STRUCTURAL STEEL (MISCELLANEOUS - LADDERS, ETC.)	1	JOB	SUM	3,040
	ELECTRICAL				
	ELECTRICAL SYSTEM		JOB	SUM	4,700
	INSTRUMENTATION	1	JOB	SUM	1,250
	MECHANICAL				
	GATE AND VALVE OPERATING MACHINERY	1	JOB	SUM	2,750
	MECHANICAL SYSTEMS	1	JOB	SUM	3,200
	MISCELLANEOUS	1	JOB	SUM	1,950
	05 LOCKS SUBTOTAL				95,310

LOCK AND DAM NO. 21, LOCATION 3, TYPE B
1200' LOCK ALTERNATIVE (ROCK FOUNDED)

05.60.	**GUIDEWALLS**				
	SITEWORK				
	EXCAVATION	118,490	CY	4.5	533
	BACKFILL	73,640	CY	10	736
	SCOUR PROTECTION	46,350	TON	15	695
	CONCRETE				
	42" DIAMETER PILES	6,360	LF	400	2,544
	CAST IN PLACE REINFORCED CONCRETE	7,070	CY	150	1,061
	PRECAST BEAMS	17,325	CY	500	8,663
	PRECAST BEAM SEATS	262	CY	1000	262
	TREMIE CONCRETE	1,709	CY	500	855
	PERMANENT CELL FILL (C0NCRETE)	6,526	CY	200	1,305
	GROUT FOR BEAMS	778	CY	1000	778
	STEEL REINFORCEMENT	2,921,700	LB	0.75	2,191
	GRAVEL FILL	22,659	CY	10	227
	METALS				
	SHEET PILING	118,328	SF	25.00	2,958
	FOUNDATION PILING	1	JOB	SUM	318
	POST TENSIONING	2,030	LF	30	61
	STRUCTURAL STEEL	1	JOB	SUM	4,060
	05.60 GUIDEWALLS SUBTOTAL				27,247
09.	**CHANNEL WORK**	1	JOB	SUM	2,300
	PROJECT SUBTOTAL				125,047
	CONTINGENCIES 25%				31,262
	PROJECT SUBTOTAL WITH CONTINGENCIES				156,308
30.	**PLANNING, ENGINEERING, AND DESIGN (10%)**				16,000
31.	**CONSTRUCTION MANAGEMENT (10%)**				16,000
	PROJECT TOTAL				$ 188,000

LOCK AND DAM NO. 21, LOCATION 3, TYPE C
1200' LOCK ALTERNATIVE (PILE FOUNDED)

CCOUNT CODE	L/D 21	QUANTITY	UNIT	NIT PRICE ($'s)	AMOUNT ($1,000's)
01.	**LANDS AND DAMAGES**				
	REAL ESTATE	1	JOB	SUM	40
04.	**DAMS**				
	REMOVAL OF EXISTING STRUCTURES	1	JOB	SUM	150
	04 DAMS SUBTOTAL				150
05.	**LOCKS**				
	SITEWORK				
	MOBILIZATION	1	JOB	SUM	10,650
	DEMOLITION	1	JOB	SUM	1,910
	EXCAVATION	120,600	CY	6.25	754
	FOUNDATION FILL AT SCOUR HOLE	0	CY	18.75	0
	WALL FILL	15,760	CY	10.00	158
	CAPSTONE	52,660	TN	25.00	1,317
	RIPRAP	33,380	TN	20.00	668
	LEVELING STONE IN LOCK FLOOR	4,580	TN	15.00	69
	GRAVEL FILTER IN LOCK FLOOR	16,606	TN	15.00	249
	GEOTEXTILE	13,740	SY	6.00	82
	FOUNDATION/LOCK DEWATERING	1	JOB	SUM	3,000
	MARINE FACILITIES, TEMP. MOORING STR.	1	JOB	SUM	3,900
	CONCRETE				
	STRUCTURAL GROUTING	450	CY	200	90
	CAST IN PLACE REINFORCED CONCRETE	61,400	CY	217	13,324
	CAST IN PLACE CONNECTIONS	964	CY	725	699
	PRECAST CONCRETE	3,210	CY	400	1,284
	TREMIE CONCRETE	9,135	CY	165	1,507
	PRECAST FLOOR PAVERS AND STRUTS	15,450	CY	286	4,419
	SET PRECAST FLOOR BEAMS	31	EA	16000	496
	SET FLOOR PANELS	62	EA	10000	620
	STEEL REINFORCEMENT	6,877,000	LB	0.75	5,158
	METALS				
	SHEET PILING	260,100	SF	35.80	9,312
	SHEET PILE BRACING	1	JOB	SUM	350
	FOUNDATION PILING AND TESTING	222,300	LF	39.75	8,836
	STRUCTURAL STEEL (GATES, VALVES, TRASH	1	JOB	SUM	11,613
	STRUCTURAL STEEL (MISCELLANEOUS - LAD	1	JOB	SUM	3,040
	ELECTRICAL				
	ELECTRICAL SYSTEM	1	JOB	SUM	4,700
	INSTRUMENTATION	1	JOB	SUM	1,250
	MECHANICAL				
	GATE AND VALVE OPERATING MACHINERY	1	JOB	SUM	2,750
	MECHANICAL SYSTEMS	1	JOB	SUM	3,200
	MISCELLANEOUS	1	JOB	SUM	1,950
	05 LOCKS SUBTOTAL				97,353

LOCK AND DAM NO. 21, LOCATION 3, TYPE C
1200' LOCK ALTERNATIVE (PILE FOUNDED)

05.60.	**GUIDEWALLS**				
	SITEWORK				
	~~EXCAVATION~~ *(Included in Channel Work)*	0	CY	4.5	0
	~~BACKFILL~~ *None*	0	CY	10	0
	SCOUR PROTECTION	37,312	TON	15	560
	CONCRETE				
	42" DIAMETER PILES	5,120	LF	400	2,048
	CAST IN PLACE REINFORCED CONCRETE	977	CY	150	147
	PRECAST BEAMS	13,947	CY	500	6,973
	PRECAST BEAM SEATS	211	CY	1000	211
	TREMIE CONCRETE	168	CY	500	84
	PERMANENT CELL FILL (C0NCRETE)	8,600	CY	200	1,720
	GROUT FOR BEAMS	626	CY	1000	626
	STEEL REINFORCEMENT	2,351,969	LB	0.75	1,764
	GRAVEL FILL	42,425	CY	10	424
	METALS				
	SHEET PILING	1	JOB	SUM	6,131
	FOUNDATION PILING	1	JOB	SUM	256
	POST TENSIONING	1,634	LF	30	49
	STRUCTURAL STEEL	1	JOB	SUM	3,268
	FLOATING GUIDEWALL	1	JOB	SUM	3,750
	05.60 GUIDEWALLS SUBTOTAL				28,011
09.	**CHANNEL WORK**	1	JOB	SUM	1,530
	PROJECT SUBTOTAL				127,085
	CONTINGENCIES 25%				31,771
	PROJECT SUBTOTAL WITH CONTINGENCIES				158,856
30.	**PLANNING, ENGINEERING, AND DESIGN (10%)**				16,000
31.	**CONSTRUCTION MANAGEMENT (10%)**				16,000
	PROJECT TOTAL				$ 190,856

TOTAL BASIC LOCK COST (O4., 05., 05.60.) WITH CONTINGENCIES, PED, & CM*	**$ 191,000**

*(EXCLUDES REAL ESTATE, RELOCATION, AND CHANNEL WORK WHICH ARE MORE SITE-SPECIFIC.)

LOCK AND DAM NO.21, LOCATION NO.4, TYPE A,
1200' LOCK ALTERNATIVE (PILE FOUNDED)

ACCOUNT CODE	ITEM	QUANTITY	UNIT	UNIT PRICE ($'s)	AMOUNT ($1,000's)
01.	**LANDS AND DAMAGES**				
	REAL ESTATE	1	JOB	SUM	20
04.	**DAMS**				
	DEMOLITION (TAINTER GATE BAY NO.1)	1	JOB	SUM	1,504
	CONCRETE (TIE-IN TO EXISTING LOCK)	362	CY	280.00	101
	MISCELLANEOUS	1	JOB	SUM	150
	REPLACEMENT TAINTER GATE	1	JOB	SUM	25,000
	04 DAMS SUBTOTAL				26,755
05.	**LOCKS**				
	SITEWORK				
	MOBILIZATION	1	JOB	SUM	10,650
	DEMOLITION	1	JOB	SUM	1,910
	EXCAVATION	48,960	CY	6.25	306
	FOUNDATION FILL AT SCOUR HOLE	0	CY	18.75	0
	LOCK WALL FILL AND COFFERDAM FILL	371,700	CY	10.00	3,717
	CAPSTONE	52,660	TN	25.00	1,317
	RIPRAP	33,380	TN	20.00	668
	LEVELING STONE IN LOCK FLOOR	4,580	TN	15.00	69
	GRAVEL FILTER IN LOCK FLOOR	16,606	TN	15.00	249
	GEOTEXTILE	13,740	SY	6.00	82
	FOUNDATION/LOCK DEWATERING	1	JOB	SUM	3,000
	MARINE FACILITIES, TEMP. MOORING STR.	1	JOB	SUM	3,900
	CONCRETE				
	STRUCTURAL GROUTING	450	CY	200	90
	CAST IN PLACE REINFORCED CONCRETE	118,200	CY	217	25,649
	CAST IN PLACE CONNECTIONS	964	CY	725	699
	PRECAST CONCRETE	0	CY	400	0
	TREMIE CONCRETE, BASE .	12,736	CY	165	2,101
	PRECAST FLOOR PAVERS AND STRUTS	15,450	CY	286	4,419
	SET PRECAST FLOOR BEAMS	31	EA	16000	496
	SET FLOOR PANELS	62	EA	10000	620
	STEEL REINFORCEMENT	7,092,000	LB	0.75	5,319
	METALS				
	SHEET PILING	724,500	SF	35.80	25,937
	SHEET PILE BRACING	1	JOB	SUM	350
	FOUNDATION PILING AND TESTING	209,190	LF	39.75	8,315
	STRUCTURAL STEEL (GATES, VALVES, ETC.)	1	JOB	SUM	11,613
	STRUCT. STEEL (MISCELLANEOUS - LADDERS, ETC.)	1	JOB	SUM	3,040
	ELECTRICAL				
	ELECTRICAL SYSTEM		JOB	SUM	4,700
	INSTRUMENTATION	1	JOB	SUM	1,250
	MECHANICAL				
	GATE AND VALVE OPERATING MACHINERY	1	JOB	SUM	2,750
	MECHANICAL SYSTEMS	1	JOB	SUM	3,200
	MISCELLANEOUS	1	JOB	SUM	1,950
	05 LOCKS SUBTOTAL				128,366

LOCK AND DAM NO.21, LOCATION NO.4, TYPE A,
1200' LOCK ALTERNATIVE (PILE FOUNDED)

05.60.	**GUIDEWALLS**				
	SITEWORK				
	EXCAVATION	118,490	CY	4.5	533
	BACKFILL	73,640	CY	10	736
	SCOUR PROTECTION	46,350	TON	15	695
	CONCRETE				
	42" DIAMETER PILES	6,360	LF	400	2,544
	CAST IN PLACE REINFORCED CONCRETE	7,070	CY	150	1,061
	PRECAST BEAMS	17,325	CY	500	8,663
	PRECAST BEAM SEATS	262	CY	1000	262
	TREMIE CONCRETE	1,709	CY	500	855
	PERMANENT CELL FILL (C0NCRETE)	6,526	CY	200	1,305
	GROUT FOR BEAMS	778	CY	1000	778
	STEEL REINFORCEMENT	2,921,700	LB	0.75	2,191
	GRAVEL FILL	22,659	CY	10	227
	METALS				
	SHEET PILING	118,328	SF	25.00	2,958
	FOUNDATION PILING	1	JOB	SUM	318
	POST TENSIONING	2,030	LF	30	61
	STRUCTURAL STEEL	1	JOB	SUM	4,060
	05.60 GUIDEWALLS SUBTOTAL				27,247
09.	**CHANNEL WORK**	1	JOB	SUM	3,667
	PROJECT SUBTOTAL				186,055
	CONTINGENCIES 25%				46,514
	PROJECT SUBTOTAL WITH CONTINGENCIES				232,569
30.	**PLANNING, ENGINEERING, AND DESIGN (10%)**				23,000
31.	**CONSTRUCTION MANAGEMENT (10%)**				23,000
	PROJECT TOTAL				$ 279,000

LOCK AND DAM NO.21, LOCATION 4, TYPE A
1200'LOCK ALTERNATIVE (PILE FOUNDED)

Subject	PILE FOUNDED LOCKS: L/D 21 Location 4 Quantities for Type A Lock, Crane-In Construction	Date Sep 96
Computed by Michael Cummings	Checked	Sheet 1 of 6

Gate Monolith

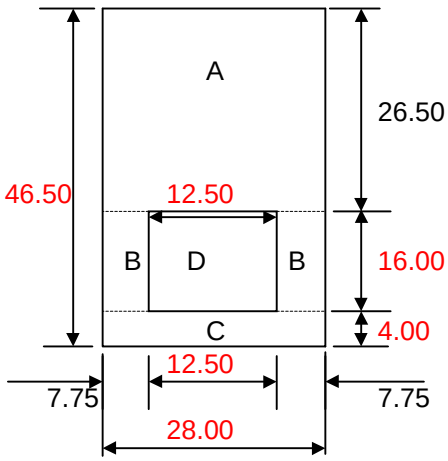

Note: For quantities change the RED values in the cells of the dimensioned cross section shown.

Cast in place concrete

A_g =	742.0	ft^2	
B_g =	248.0	ft^2	
C_g =	112.0	ft^2	
D_g =	200.0	ft^2	CULVERT
Total =	1,102.0	ft^2	

Tremie concrete (below "C")

132.0 ft^2

hght chk = 46.50 left
hght chk = 46.50 right

US lngth = 265.0 ft DS lngth = 240.0 ft

Lock Wall
typical

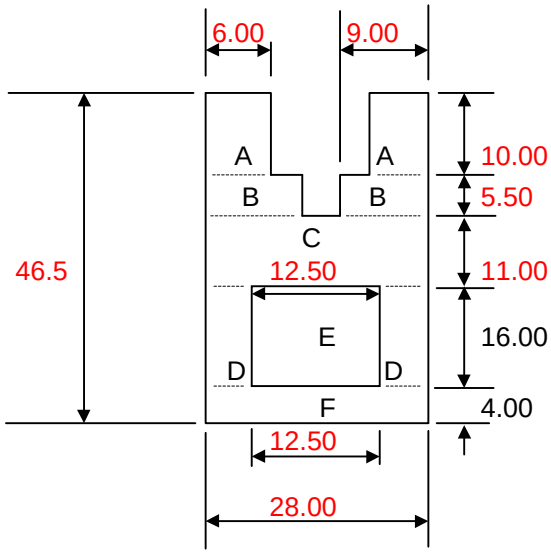

Cast in place concrete

A_w =	120.00	ft^2	
B_w =	99.00	ft^2	
C_w =	308.00	ft^2	
D_w =	248.00	ft^2	
E_w =	200.00	ft^2	CULVERT
F_w =	112.00	ft^2	
Total =	887.00	ft^2	

Tremie concrete (below "F")

132.0 ft^2

hght chk = 46.50 left
hght chk = 46.50 right

RS Wall = 1,050.0 ft LS Wall = 1,050.0 ft

Subject	Date

L214ap

Typical cell for cofferdam

Area = 1,736.0 ft^2

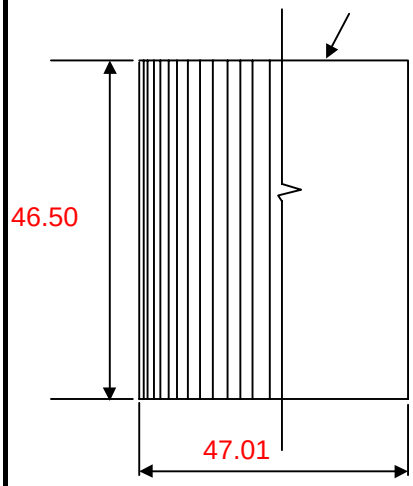

Pile type: PS31
Choose PSA23, PS27.5, or PS31

Area between cells:

Area =	773.0	ft^2
Distance =	15.28	ft
Length =	1.64	ft
Number in cell =	90	piles
No. in space =	20	piles
US Length =	2,650.0	ft
DS Length =	2,650.0	ft

LOCK CHAMBER WALLS:

A. WALL MONOLITHS

1. River side walls

(a) Cast in place concrete

Volume = 34,494.4 CY

(b) Precast concrete

Volume = .0 CY

1. Land side walls

(a) Cast in place concrete

Volume = 34,494.4 CY

(b) Precast concrete

Volume = .0 CY

B. GATE MONOLITHS

1. Upstream cast in place concrete

Volume = 21,631.9 CY

2. Upstream precast concrete

Volume = .0 CY

1. Downstream cast in place concrete

Volume = 19,591.1 CY

2. Downstream precast concrete

Volume = .0 CY

Michael Cummings		3	6

COFFERDAMS:

1. Cofferdam #1, Upstream

Number = 43.0 cells

Total = 9,460.0 piles

2. Cofferdam #2, Upstream

Number = 43.0 cells

Total = 371,611.0 CY fill volume

SILLS:

Length = 120.0 ft **Volume =** 7,893.3 CY
Width = 111.0 ft
Height = 8.0 ft

SUMMARY:

CONCRETE (Cast in place)

A.	Lockwalls =	68,988.9 CY
B.	Gate monoliths =	41,223.0 CY
C.	Sills =	7,893.3 CY
D.	Tremie =	12,735.6 CY
	Total =	118,200.0 CY

PRECAST CONCRETE

A.	Lockwalls =	.0 CY
B.	Gate monoliths =	.0 CY
	Total =	.0 CY

SHEETPILES

A.	Required number for cofferdams =	9,460.0 piles
B.	Required number for walls =	0 piles
	Total =	9,500.0 piles
	Total =	724,500.0 SF of piling

FILL

A.	Required fill for cofferdams =	371,611.0 CY
	Total =	371,700.0 CY

Subject		Date
L/D 21 Location 4 Quantities for Type B Lock, Crane-In Construcion		Sep 96
Computed by Michael Cummings	Checked	Sheet 4 of 6

Upstream Guidewall Cell, Small
(typical)
Area = 700.0 SF

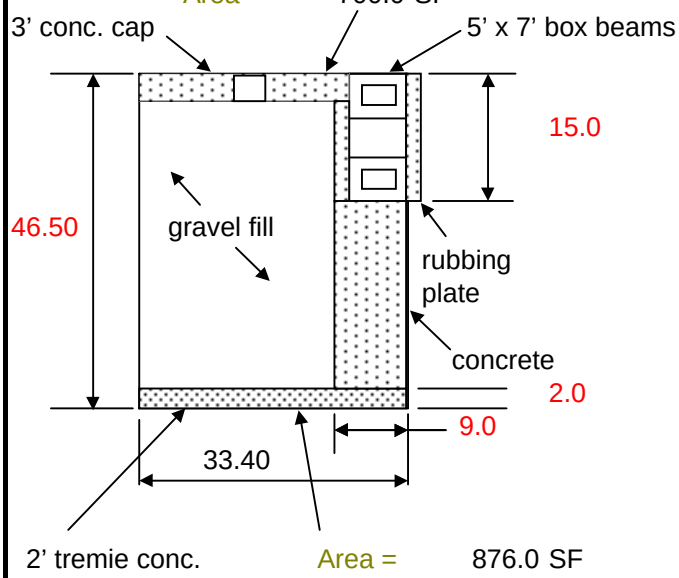

Area = 876.0 SF

Note: For quantities change the RED values in the cells of the dimensioned cross section shown.

Cast-in-Place Concrete			
3' conc. cap	=	77	CY
concrete	=	234	CY
Total	=	310	CY
for 7 cells	=	2,172	CY
Tremie concrete	=	65	CY
for 7 cells	=	455	CY
Precast Concrete			
5'x7' beam	=	889	CY
rubbing pl.	=	500	CY
Total	=	1,389	CY
Gravel fill	=	1,079	CY
for 7 cells	=	7,553	CY
Sheet Piling	=	4,879	SF
for 7 cells	=	34,154	SF

Upstream Guidewall Cell, Large
(typical)
Area = 2,124.0 SF

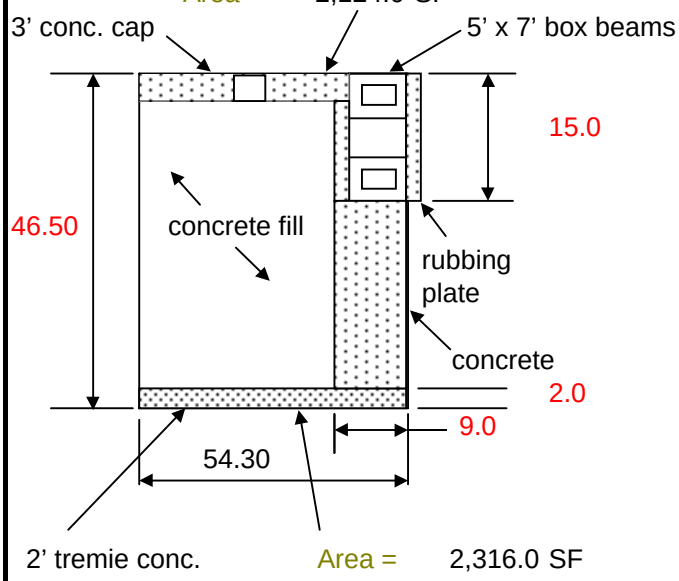

Area = 2,316.0 SF

Note: For quantities change the RED values in the cells of the dimensioned cross section shown.

Cast-in-Place Concrete			
3' conc. cap	=	235	CY
concrete	=	300	CY
Total	=	535	CY
Tremie concrete	=	172	CY
Permanent Cell Fill		3,263	CY
Sheet Piling	=	7,932	SF

Subject		Date
L/D 21 Location 4 Quantities for Type B Lock, Crane-In Construcion		Sep 96
Computed by Michael Cummings	Checked	Sheet 5 of 6

Downstream Guidewall Cell, Small
(typical)

Note: For quantities change the RED values in the cells of the dimensioned cross section

LOCK AND DAM NO.21, LOCATION 4, TYPE A
1200'LOCK ALTERNATIVE (PILE FOUNDED)

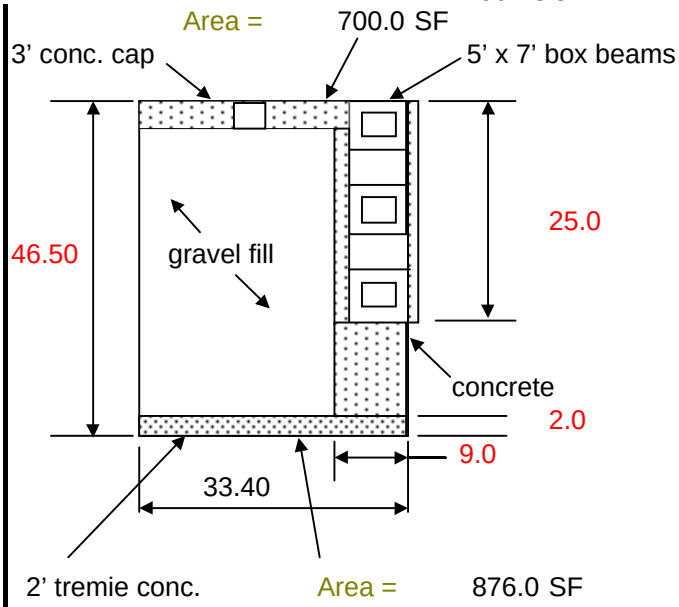

shown.

Cast-in-Place Concrete

3' conc. cap	=	77	CY
concrete	=	185	CY
Total	=	262	CY
for 14 cells	=	3,668	CY
Tremie concrete	=	65	CY
for 14 cells	=	910	CY

Precast Concrete

5'x7' beam	=	2,667	CY
rubbing pl.	=	1,667	CY
Total	=	4,333	CY
Gravel fill	=	1,079	CY
for 14 cells	=	15,106	CY
Sheet Piling	=	4,879	SF
for 14 cells	=	68,309	SF

Downstream Guidewall Cell, Large
(typical)

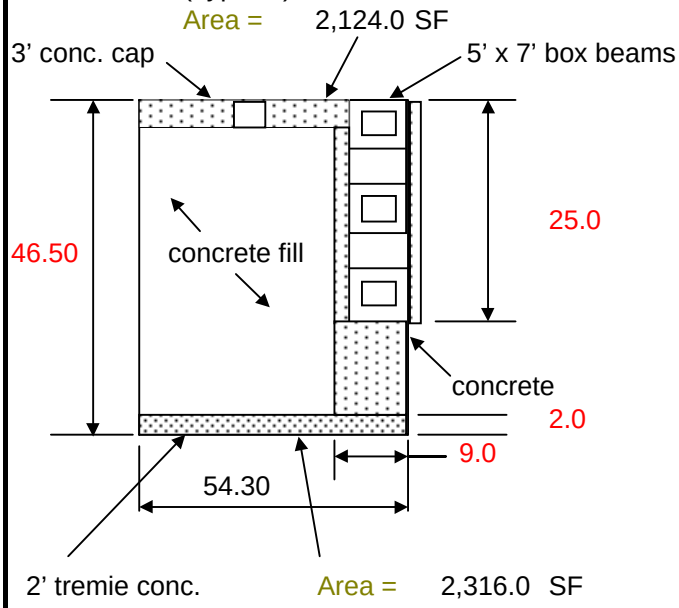

Note: For quantities change the RED values in the cells of the dimensioned cross section shown.

Cast-in-Place Concrete

3' conc. cap	=	235	CY
concrete	=	461	CY
Total	=	696	CY
Tremie concrete	=	172	CY
Permanent Cell Fill		3,263	CY
Sheet Piling	=	7,932	SF

Subject		Date
L/D 21 Location 4 Quantities for Type B Lock, Crane-In Construcion		Sep 96
Computed by Michael Cummings	Checked	Sheet 6 of 6

LOCK GUIDEWALLS :

A. UPSTREAM GUIDEWALL

B. DOWNSTREAM GUIDEWALL

LOCK AND DAM NO.21, LOCATION 4, TYPE A
1200'LOCK ALTERNATIVE (PILE FOUNDED)

1. Cast-in-place concrete

Volume = 2,707 CY

2. Precast concrete

Volume = 1,389 CY

3. Gravel Fill

Volume = 7,553 CY

4. Sheet Piling

Area = 42,087 SF

5. Permanent Cell Fill

Volume = 3,263 CY

6. Tremie Concrete

Volume = 627 CY

1. Cast-in-place concrete

Volume = 4,363 CY

2. Precast concrete

Volume = 4,333 CY

3. Gravel Fill

Volume = 15,106 CY

4. Sheet Piling

Area = 76,241 SF

5. Permanent Cell Fill

Volume = 3,263 CY

6. Tremie Concrete

Volume = 1,082 CY

Guidewall Summary

Total Cast-in-Place Concrete	7,070	CY
Total Precast Concrete	5,722	CY
Total Gravel Fill	22,659	CY
Total Sheet Piling	118,328	SF
Total Permanent Cell Fill	6,526	CY
Total Tremie Concrete	1,709	CY

LOCK AND DAM NO.21, LOCATION 4, TYPE B,
1200' LOCK ALTERNATIVE (PILE FOUNDED)

ACCOUNT CODE	ITEM	QUANTITY	UNIT	UNIT PRICE ($'s)	AMOUNT ($1,000's)
01.	**LANDS AND DAMAGES**				
	REAL ESTATE	1	JOB	SUM	200
04.	**DAMS**				
	DEMOLITION (TAINTER GATE BAY NO.1)	1	JOB	SUM	1,504
	REPLACEMENT TAINTER GATE	1	JOB	SUM	25,000
	04 DAMS SUBTOTAL				26,504
05.	**LOCKS**				
	SITEWORK				
	MOBILIZATION	1	JOB	SUM	8,000
	DEMOLITION	1	JOB	SUM	1,910
	EXCAVATION	117,700	CY	4.50	530
	BACKFILL	160,000	CY	6.25	1,000
	CAPSTONE	52,660	TN	25.00	1,317
	SCOUR PROTECTION	1	JOB	SUM	2,300
	RIPRAP	143,700	TN	20.00	2,874
	STONE FILL	16,606	TN	15.00	249
	GEOTEXTILE	13,740	SY	6.00	82
	FOUNDATION/LOCK DEWATERING	1	JOB	SUM	3,000
	COFFERDAM REMOVAL	1	JOB	SUM	81
	MARINE FACILITIES, TEMP. MOORING STR.	1	JOB	SUM	3,900
	CONCRETE				
	STRUCTURAL GROUTING	1	JOB	SUM	5,400
	CAST IN PLACE REINFORCED CONCRETE	47,300	CY	217	10,264
	CAST IN PLACE CONNECTIONS	964	CY	725	699
	PRECAST CONCRETE LOCK FLOOR	8,600	CY	400	3,440
	PRECAST CONCRETE CHAMBER AND APPROACH WALL	8,400	CY	400	3,360
	TREMIE CONCRETE, BASE	20,300	CY	165	3,350
	TREMIE CONCRETE, WALLS	50,000	CY	165	8,250
	FURNISH AND SET LANDING PADS	24	EA	19000	456
	SET PRECAST WALL UNITS	88	EA	16000	1,408
	FLOAT IN AND SET FLOOR UNITS	11	EA	40000	440
	STEEL REINFORCEMENT	5,912,500	LB	0.75	4,434
	STEEL CULVERT PIPE	5,278,500	LB	0.65	3,431
	METALS				
	SHEET PILING	1	JOB	SUM	6,400
	SHEET PILE BRACING	1	JOB	SUM	600
	FOUNDATION PILING AND TESTING	1	JOB	SUM	15,000
	STRUCTURAL STEEL (GATES, VALVES, ETC.)	1	JOB	SUM	11,600
	STRUCT. STEEL (MISCELLANEOUS - LADDERS, ETC.)	1	JOB	SUM	3,000
	ELECTRICAL				
	ELECTRICAL SYSTEM		JOB	SUM	4,700
	INSTRUMENTATION	1	JOB	SUM	1,250
	MECHANICAL				
	GATE AND VALVE OPERATING MACHINERY	1	JOB	SUM	2,750
	MECHANICAL SYSTEMS	1	JOB	SUM	3,200
	MISCELLANEOUS	1	JOB	SUM	1,950
	05 LOCKS SUBTOTAL				120,625

LOCK AND DAM NO.21, LOCATION 4, TYPE B,
1200' LOCK ALTERNATIVE (PILE FOUNDED)

05.60.	**GUIDEWALLS**				
	SITEWORK				
	EXCAVATION	118,490	CY	4.5	533
	BACKFILL	73,640	CY	10	736
	SCOUR PROTECTION	211,130	TON	15	3,167
	CONCRETE				
	42" DIAMETER PILES	6,360	LF	400	2,544
	CAST IN PLACE REINFORCED CONCRETE	12,884	CY	150	1,933
	PRECAST BEAMS	17,325	CY	500	8,663
	PRECAST BEAM SEATS	262	CY	1000	262
	TREMIE CONCRETE	1,709	CY	500	855
	PERMANENT CELL FILL (C0NCRETE)	12,030	CY	200	2,406
	GROUT FOR BEAMS	778	CY	1000	778
	STEEL REINFORCEMENT	2,921,700	LB	0.75	2,191
	GRAVEL FILL	41,769	CY	10	418
	METALS				
	SHEET PILING	207,392	SF	25.00	5,185
	FOUNDATION PILING	1	JOB	SUM	318
	POST TENSIONING	2,030	LF	30	61
	STRUCTURAL STEEL	1	JOB	SUM	4,060
	05.60 GUIDEWALLS SUBTOTAL				34,109
09.	**CHANNEL WORK**	1	JOB	SUM	2,974
	PROJECT SUBTOTAL				184,412
	CONTINGENCIES 25%				46,103
	PROJECT SUBTOTAL WITH CONTINGENCIES				230,514
30.	**PLANNING, ENGINEERING, AND DESIGN (10%)**				23,000
31.	**CONSTRUCTION MANAGEMENT (10%)**				23,000
	PROJECT TOTAL				$ 277,000

LOCK AND DAM NO.21, LOCATION 4, TYPE B,
1200' LOCK ALTERNATIVE (PILE FOUNDED)

Subject	PILE FOUNDED LOCKS: 1200 ft lock L/D 21 Location 4 Quantities for Type B Lock	Date OCT 1996
Computed by Michael Cummings	Checked	Sheet 1 of 7

Gate Monolith
(typical)

Note: For quantities change the RED values in the cells of the dimensioned cross section shown.

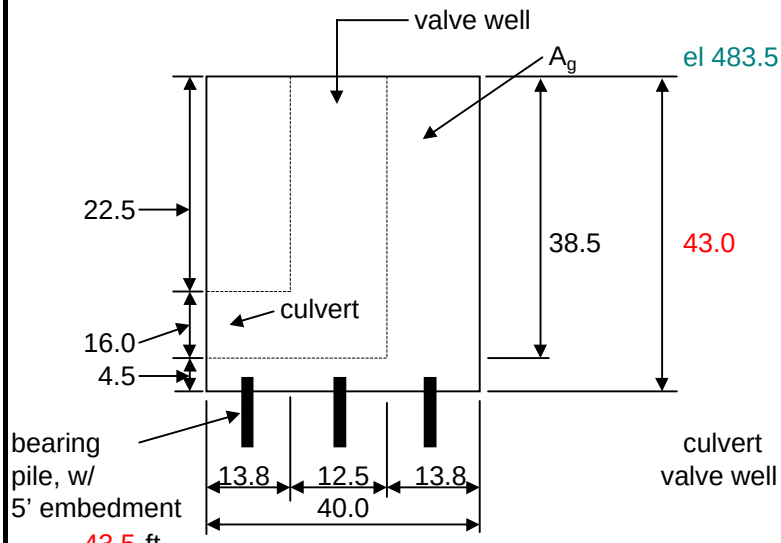

Cast in place concrete

A_g =	16,982.2	CY	U.S.
A_g =	20,485.9	CY	D.S.
Total =	37,468.1	CY	

The culverts are subtracted gross volume

	width	length	heighth	
culvert =	12.5	16.0	50.0	CF
valve well =	12.5	16.0	13.8	CF

US gates length = 137.0 ft DS gates length = 164.5 ft

hght chk =	43.00	left
hght chk =	43.00	right

Lock Wall
(typical)

Note: For quantities change the RED values in the cells of the dimensioned cross section

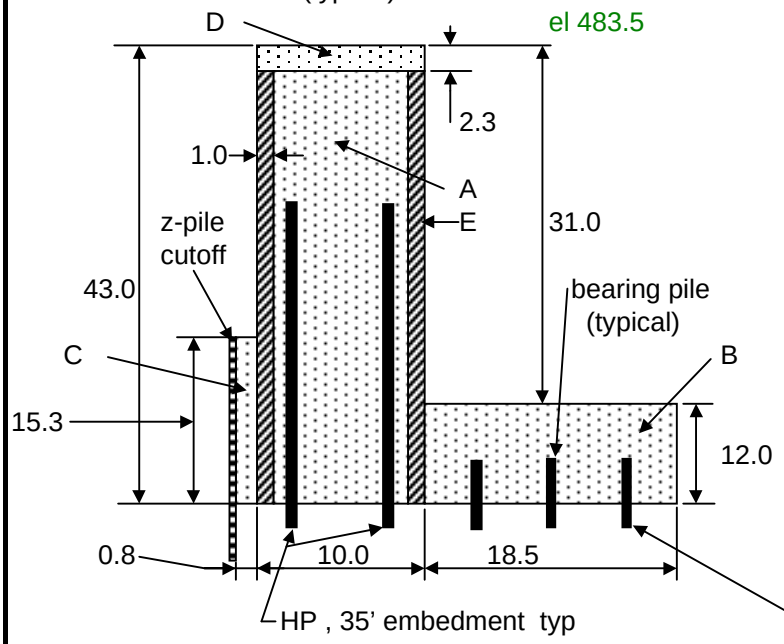

Tremie concrete / CIP

A =	325.6	SF
B =	222.0	SF
C =	11.5	SF

Cast in place

D =	23.0	SF

Pre-cast

E =	81.4	SF
Total =		SF

HP reinforcing ratio =	0.960	HP/ft
Total HP walls =	2,088.0	ea
Total bearing pile =	13,050.0	ea

assume 3' spacing

73.5 ft total length 43.5 ft

RS Wall = 1,087.5 ft LS Wall = 1,087.5 ft

hght chk =	43.00	left
hght chk =	43.00	right

L214bp

LOCK AND DAM NO.21, LOCATION 4, TYPE B,
1200' LOCK ALTERNATIVE (PILE FOUNDED)

Subject	PILE FOUNDED LOCKS: 1200 ft lock L/D 21 Location 4 Quantities for Type B Lock	Date OCT 1996
Computed by Michael Cummings	Checked	Sheet 2 of 7

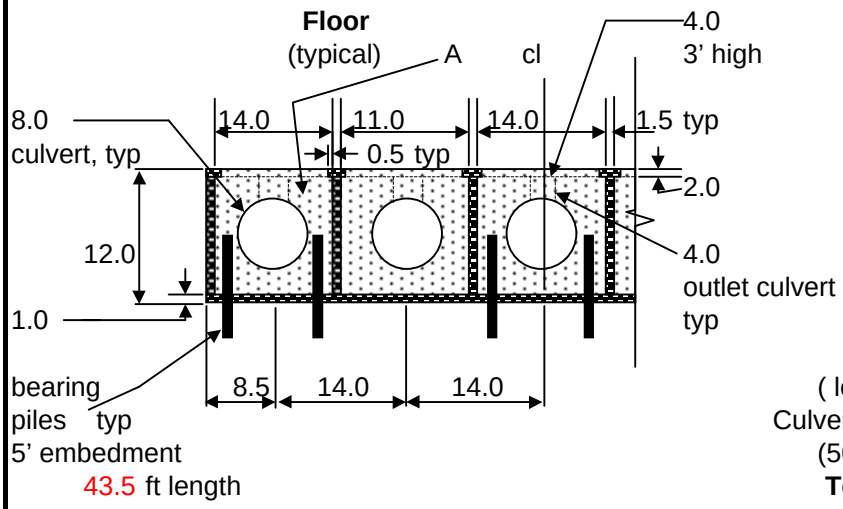

43.5 ft length

Tremie concrete
A = 442.7 SF
Pre-cast
B = 182.0 SF

Total = 624.7 SF

Piles: 6 rows = 7,620.0 piles
(length not determined)
Culvert fill/empty area = 11.31 CF/ft
(50 ft section from plate P4B2)
Total tremie conc = 20,290.0 CY

Total pre-cast = 8,560.7 CY

Length of floor = 1,270.0 ft width of floor = 73.0 ft

Impact cell
typical
Area = 2,827.0 ft^2

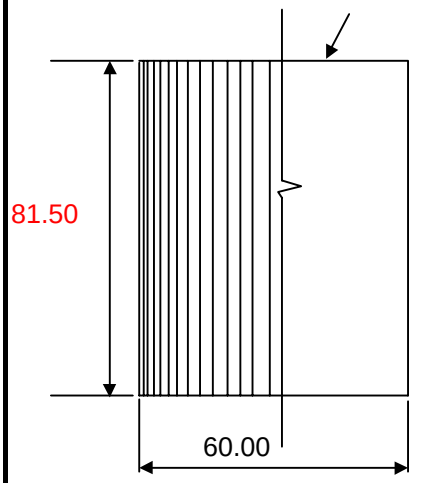

Note: For quantities change the RED values in the cells of the dimensioned cross section shown.

Pile type: PS31
Choose PSA23, PS27.5, or PS31

Area between cells:
Area = 1,127.0 SF

Length = 1.641 ft
Number in cell = 115 piles

US number = 1.0 cells and spaces between cells
DS number = 1.0 cells and spaces between cells

US Wall = 994.0 ft DS Wall = 1,016.0 ft

LOCK AND DAM NO.21, LOCATION 4, TYPE B,
1200' LOCK ALTERNATIVE (PILE FOUNDED)

Subject	PILE FOUNDED LOCKS: 1200 ft lock L/D 21 Location 4 Quantities for Type B Lock	Date OCT 1996
Computed by Michael Cummings	Checked	Sheet 3 of 7

cofferdam cell
typical
Area = 1,963.0 ft^2

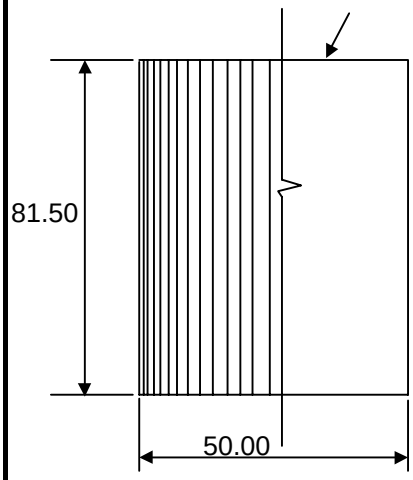

Note: For quantities change the RED values in the cells of the dimensioned cross section shown.

Pile type: PS31
Choose PSA23, PS27.5, or PS31

Area between cells:

Area =	855.0	SF
Distance =	15.91	ft
Length =	1.641	ft
Number in cell =	96	piles
No. in space =	21	piles

UPSTREAM

North or South length:	264.0	.4	modular numbers
East or West length:	330.0	.5	to aid in value search

DOWNSTREAM

North or South length:	264.0	.4	modular numbers
East or West length:	330.0	.5	to aid in value search

US	Total number of cells:	9.0	DS	Total number of cells:	9.0
US	Total number of cells:	11.0	DS	Total number of cells:	11.0

LOCK CHAMBER WALLS:

A. WALL MONOLITHS

1. River side walls
(a) Cast in place concrete
Volume = 926.4 CY
(b) Tremie concrete
Volume = 22,518.3 CY
(c) Pre-cast concrete
Volume = 3,555.7 CY
(d) Pre-cast concrete (approach wall)
Volume = 840.3 CY
(e) Tremie concrete (approach wall)
Volume = 3,274.4 CY

1. Land side walls
(a) Cast in place concrete
Volume = 926.4 CY
(b) Tremie concrete
Volume = 22,518.3 CY
(c) Pre-cast concrete
Volume = 3,555.7 CY
(d) Pre-cast concrete (approach wall)
Volume = 425.1 CY
(e) Tremie concrete (approach wall)
Volume = 1,656.3 CY

B. GATE MONOLITHS

1. Upstream cast in place concrete
Volume = 16,982.2 CY
Piles = 2600 LF

1. Downstream cast in place concrete
Volume = 20,485.9 CY
Piles = 3000 LF

IMPACT CELLS

Total = 230.0 piles
Total = 18,745.0 SF of piling

Total = 17,067.0 CY fill volume

LOCK AND DAM NO.21, LOCATION 4, TYPE B,
1200' LOCK ALTERNATIVE (PILE FOUNDED)

Subject	PILE FOUNDED LOCKS: 1200 ft lock L/D 21 Location 4 Quantities for Type B Lock	Date OCT 1996
Computed by Michael Cummings	Checked	Sheet 4 of 7

SILLS:

Length = 120.0 ft **Volume =** 7,893.0 CY of CIP concrete
111.0 ft
8.0 ft

COFFERDAM CELLS:

Upstream riverside
Total = 2,340.0 piles
Total = 312,955.0 SF of piling

Downstream riverside
Total = 2,340.0 piles
Total = 312,955.0 SF of piling

SUMMARY:

Lockwalls:

CONCRETE (Precast)
A. Lockwalls = 7,111.4 CY
B. Approach walls = 1,265.3 CY **Total =** 8,400.0 CY

CONCRETE (CIP, Cast in place)
A. Lockwalls = 1,852.8 CY
B. Gate mono's = 37,468.1 CY
C. Sills = 7,893.0 CY **Total =** 47,300.0 CY

CONCRETE (Tremie)
A. Lockwalls = 45,036.6
B. Approach walls = 4,930.7 **Total =** 50,000.0 CY

HP PILING **Total =** 76,800.0 LF

BEARING PILES:
Total = 100,300.0 LF

Lock Floor:

CONCRETE:
A. Tremie concrete = 20,300.0 CY
B. Precast = 8,600.0 CY

BEARING PILES:
Total = 110,500.0 LF

Impact cells:

A. SHEETPILES
1. Required number for impact cells = 230.0 piles
Total = 300.0 piles **Total =** 40,200.0 SF of piling

2. Required number for seepage cutoff
Total = .0 SF

B. FILL
1. Required fill for cofferdams = #REF! CY
Total = #REF! CY includes losses from compaction, etc

Cofferdam sheet piling

A. SHEETPILE, up and down stream
Total = 4,700.0 piles **Total =** 626,000.0 SF

LOCK AND DAM NO.21, LOCATION 4, TYPE B,
1200' LOCK ALTERNATIVE (PILE FOUNDED)

Subject	PILE FOUNDED LOCKS: L/D 21 Location 4 Quantities for Type B Lock	Date OCT 1996
Computed by Michael Cummings	Checked	Sheet 5 of 7

Upstream Guidewall Cell, Small

(typical)

Area = 700.0 SF

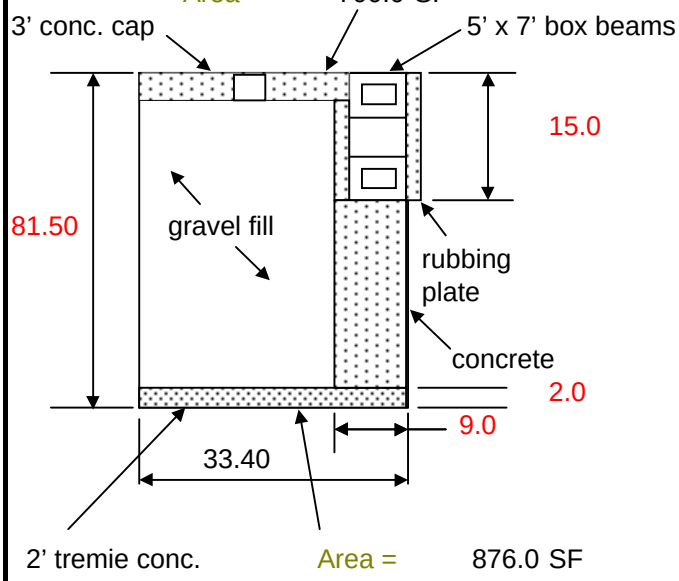

Area = 876.0 SF

Note: For quantities change the RED values in the cells of the dimensioned cross section shown.

Cast-in-Place Concrete			
3' conc. cap	=	77	CY
concrete	=	479	CY
Total	=	556	CY
for 7 cells	=	3,893	CY
Tremie concrete	=	65	CY
for 7 cells	=	455	CY
Precast Concrete			
5'x7' beam	=	889	CY
rubbing pl.	=	500	CY
Total	=	1,389	CY
Gravel fill	=	1,989	CY
for 7 cells	=	13,923	CY
Sheet Piling	=	8,552	SF
for 7 cells	=	59,862	SF

Upstream Guidewall Cell, Large

(typical)

Area = 2,124.0 SF

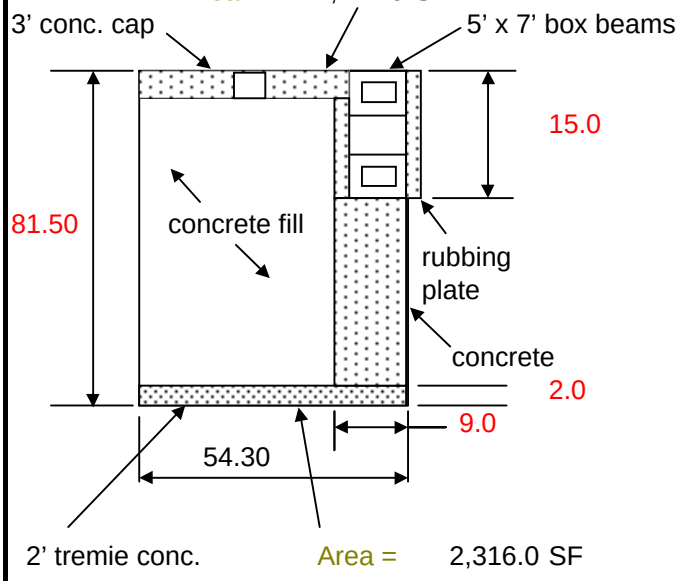

Area = 2,316.0 SF

Note: For quantities change the RED values in the cells of the dimensioned cross section shown.

Cast-in-Place Concrete			
3' conc. cap	=	235	CY
concrete	=	624	CY
Total	=	859	CY
Tremie concrete	=	172	CY
Permanent Cell Fill		6,015	CY
Sheet Piling	=	13,903	SF

LOCK AND DAM NO.21, LOCATION 4, TYPE B,
1200' LOCK ALTERNATIVE (PILE FOUNDED)

Subject	PILE FOUNDED LOCKS: L/D 21 Location 4 Quantities for Type B Lock	Date OCT 1996
Computed by Michael Cummings	Checked	Sheet 6 of 7

Downstream Guidewall Cell, Small

(typical)

Area = 700.0 SF

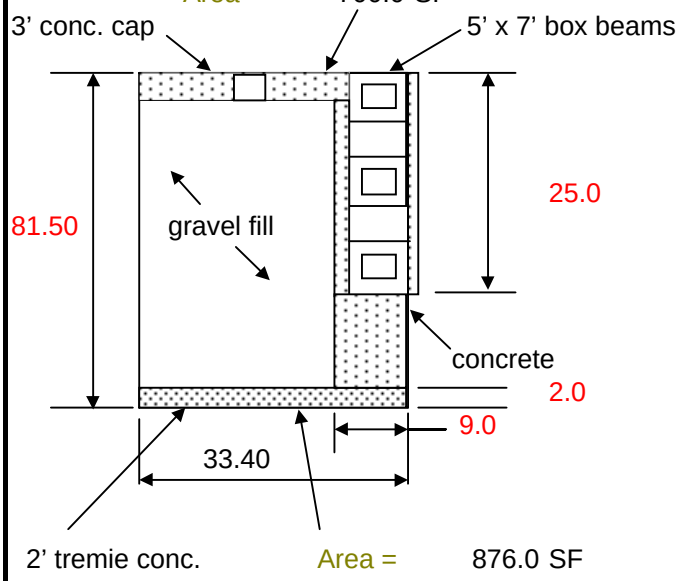

Area = 876.0 SF

Note: For quantities change the RED values in the cells of the dimensioned cross section shown.

Cast-in-Place Concrete			
3' conc. cap	=	77	CY
concrete	=	431	CY
Total	=	508	CY
for 14 cells	=	7,110	CY
Tremie concrete	=	65	CY
for 14 cells	=	910	CY
Precast Concrete			
5'x7' beam	=	2,667	CY
rubbing pl.	=	1,667	CY
Total	=	4,333	CY
Gravel fill	=	1,989	CY
for 14 cells	=	27,846	CY
Sheet Piling	=	8,552	SF
for 14 cells	=	119,724	SF

Downstream Guidewall Cell, Large

(typical)

Area = 2,124.0 SF

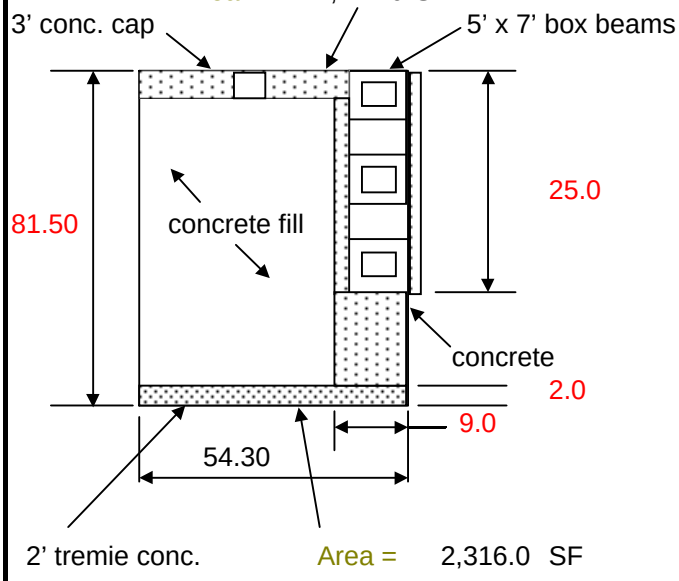

Area = 2,316.0 SF

Note: For quantities change the RED values in the cells of the dimensioned cross section shown.

Cast-in-Place Concrete			
3' conc. cap	=	235	CY
concrete	=	786	CY
Total	=	1,020	CY
Tremie concrete	=	172	CY
Permanent Cell Fill		6,015	CY
Sheet Piling	=	13,903	SF

LOCK AND DAM NO.21, LOCATION 4, TYPE B,
1200' LOCK ALTERNATIVE (PILE FOUNDED)

Subject	PILE FOUNDED LOCKS: L/D 21 Location 4 Quantities for Type B Lock	Date OCT 1996
Computed by Michael Cummings	Checked	Sheet 7 of 7

LOCK GUIDEWALLS :

A. UPSTREAM GUIDEWALL

1. Cast-in-place concrete

Volume = 4,753 CY

2. Precast concrete

Volume = 1,389 CY

3. Gravel Fill

Volume = 13,923 CY

4. Sheet Piling

Area = 73,765 SF

5. Permanent Cell Fill

Volume = 6,015 CY

6. Tremie Concrete

Volume = 627 CY

B. DOWNSTREAM GUIDEWALL

1. Cast-in-place concrete

Volume = 8,131 CY

2. Precast concrete

Volume = 4,333 CY

3. Gravel Fill

Volume = 27,846 CY

4. Sheet Piling

Area = 133,627 SF

5. Permanent Cell Fill

Volume = 6,015 CY

6. Tremie Concrete

Volume = 1,082 CY

Guidewall Summary

Total Cast-in-Place Concrete	12,884	CY
Total Precast Concrete	5,722	CY
Total Gravel Fill	41,769	CY
Total Sheet Piling	207,392	SF
Total Permanent Cell Fill	12,030	CY
Total Tremie Concrete	1,709	CY

LOCK AND DAM NO.21, LOCATION 4, TYPE C,
1200' LOCK ALTERNATIVE (PILE FOUNDED)

ACCOUNT CODE	ITEM	QUANTITY	UNIT	UNIT PRICE ($'s)	AMOUNT ($1,000's)
01.	**LANDS AND DAMAGES**				
	REAL ESTATE	1	JOB	SUM	20
04.	**DAMS**				
	DEMOLITION (TAINTER GATE BAY NO.1)	1	JOB	SUM	1,504
	REPLACEMENT TAINTER GATE	1	JOB	SUM	25,000
	04 DAMS SUBTOTAL				26,504
05.	**LOCKS**				
	SITEWORK				
	MOBILIZATION	1	JOB	SUM	8,000
	DEMOLITION	1	JOB	SUM	1,910
	EXCAVATION	117,700	CY	4.50	530
	BACKFILL	160,000	CY	6.25	1,000
	CAPSTONE	52,660	TN	25.00	1,317
	SCOUR PROTECTION	1	JOB	SUM	2,300
	RIPRAP	143,700	TN	20.00	2,874
	STONE FILL	16,606	TN	15.00	249
	GEOTEXTILE	13,740	SY	6.00	82
	FOUNDATION/LOCK DEWATERING	1	JOB	SUM	3,000
	COFFERDAM REMOVAL	1	JOB	SUM	81
	MARINE FACILITIES, TEMP. MOORING STR.	1	JOB	SUM	3,900
	CONCRETE				
	STRUCTURAL GROUTING	1	JOB	SUM	5,400
	CAST IN PLACE REINFORCED CONCRETE	45,400	CY	217	9,852
	CAST IN PLACE CONNECTIONS	964	CY	725	699
	PRECAST FLOOR SLABS	3,398	CY	150	510
	PRECAST CONCRETE APPROACH WALLS	1,532	CY	400	613
	PRECAST CULVERTS	4,990	CY	600	2,994
	PRECAST RUB PANELS	54,375	SF	40	2,175
	TREMIE CONCRETE, BASE	19,130	CY	165	3,156
	TREMIE CONCRETE, WALLS	4,527	CY	175	792
	STEEL REINFORCEMENT	5,675,000	LB	0.75	4,256
	CELL FILL, GRAVEL	144,242	CY	10	1,442
	METALS				
	SHEET PILING	638,471	SF	25.00	15,962
	SHEET PILE BRACING	1	JOB	SUM	600
	FOUNDATION PILING AND TESTING	1	JOB	SUM	15,000
	STRUCTURAL STEEL (GATES, VALVES, ETC.)	1	JOB	SUM	11,600
	STRUCT. STEEL (MISCELLANEOUS - LADDERS, ETC.)	1	JOB	SUM	3,000
	ELECTRICAL				
	ELECTRICAL SYSTEM		JOB	SUM	4,700
	INSTRUMENTATION	1	JOB	SUM	1,250
	MECHANICAL				
	GATE AND VALVE OPERATING MACHINERY	1	JOB	SUM	2,750
	MECHANICAL SYSTEMS	1	JOB	SUM	3,200
	MISCELLANEOUS	1	JOB	SUM	1,950
	05 LOCKS SUBTOTAL				117,144

LOCK AND DAM NO.21, LOCATION 4, TYPE C,
1200' LOCK ALTERNATIVE (PILE FOUNDED)

05.60.	**GUIDEWALLS**				
	SITEWORK				
	EXCAVATION	118,490	CY	4.5	533
	BACKFILL	73,640	CY	10	736
	SCOUR PROTECTION	211,130	TON	15	3,167
	CONCRETE				
	42" DIAMETER PILES	6,360	LF	400	2,544
	CAST IN PLACE REINFORCED CONCRETE	6,489	CY	150	973
	PRECAST BEAMS	17,325	CY	500	8,663
	PRECAST BEAM SEATS	262	CY	1000	262
	TREMIE CONCRETE	1,709	CY	500	855
	PERMANENT CELL FILL (C0NCRETE)	5,976	CY	200	1,195
	GROUT FOR BEAMS	778	CY	1000	778
	STEEL REINFORCEMENT	2,921,700	LB	0.75	2,191
	GRAVEL FILL	20,748	CY	10	207
	METALS				
	SHEET PILING	109,422	SF	25.00	2,736
	FOUNDATION PILING	1	JOB	SUM	318
	POST TENSIONING	2,030	LF	30	61
	STRUCTURAL STEEL	1	JOB	SUM	4,060
	05.60 GUIDEWALLS SUBTOTAL				29,279
09.	**CHANNEL WORK**	1	JOB	SUM	5,500
	PROJECT SUBTOTAL				178,447
	CONTINGENCIES 25%				44,612
	PROJECT SUBTOTAL WITH CONTINGENCIES				223,059
30.	**PLANNING, ENGINEERING, AND DESIGN (10%)**				22,000
31.	**CONSTRUCTION MANAGEMENT (10%)**				22,000
	PROJECT TOTAL				$ 267,000

LOCK AND DAM NO.21, LOCATION 4, TYPE C,
1200' LOCK ALTERNATIVE (PILE FOUNDED)

Subject	PILE FOUNDED LOCKS: 1200 ft lock L/D 21 Location 4 Quantities for Type C Lock	Date OCT 1996
Computed by Michael Cummings	Checked	Sheet 1 of 7

Gate Monolith
(typical)

Note: For quantities change the RED values in the cells of the dimensioned cross section shown.

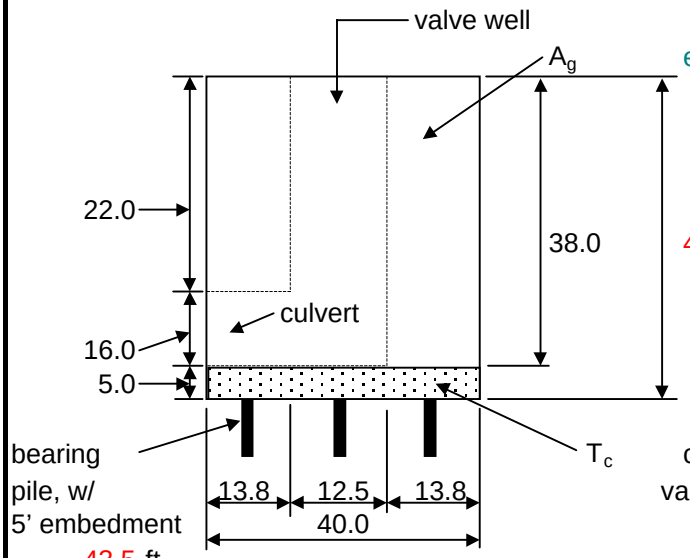

43.5 ft

Cast in place concrete

A_g =	16,982.2	CY	U.S.
A_g =	20,485.9	CY	D.S.
Total =	37,468.1	CY	

Tremie concrete

T_c =	10,203.7	CY

The culverts are subtracted gross volume

	width	length	heighth	
culvert =	12.5	16.0	50.0	CF
valve well =	12.5	16.0	13.8	CF

US gates length = 137.0 ft DS gates length = 164.5 ft

hght chk =	43.00	left
hght chk =	43.00	right

Lock Wall

Note: For quantities change the RED values in the cells of the dimensioned cross section

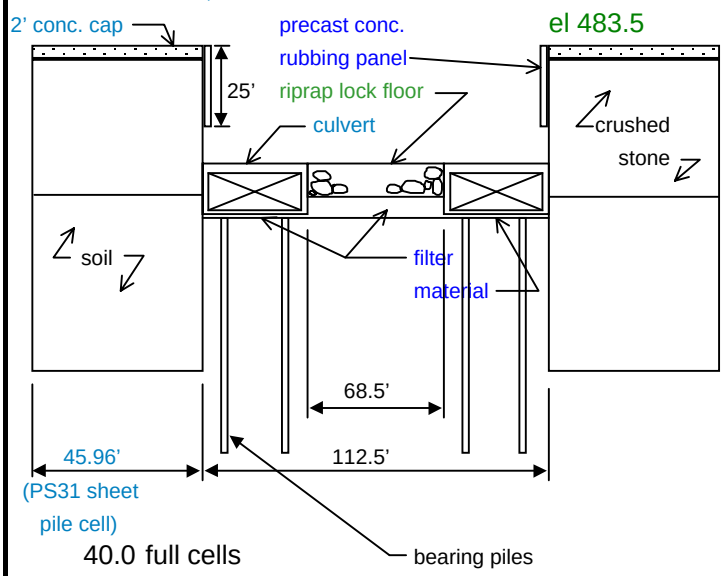

Cast-in-place concrete
2' concrete cap
Volume= 1,706.2 CY
Pre-cast concrete
precast rubbing panel
Area= 54,350.0 SF
Sheet pile cells
sheet piling
Area= 638,471.0 SF
Sheet pile cell fill
gravel
Volume= 144,242 CY

40.0 full cells
4.0 half cells
42.0 filler cells

73.5 ft total length 43.5 ft

RS Wall = 1,087.5 ft LS Wall = 1,087.5 ft

hght chk =	.00	left
hght chk =	.00	right

LOCK AND DAM NO.21, LOCATION 4, TYPE C,
1200' LOCK ALTERNATIVE (PILE FOUNDED)

Subject	PILE FOUNDED LOCKS: 1200 ft lock L/D 21 Location 4 Quantities for Type C Lock	Date OCT 1996
Computed by Michael Cummings	Checked	Sheet 2 of 7

Floor

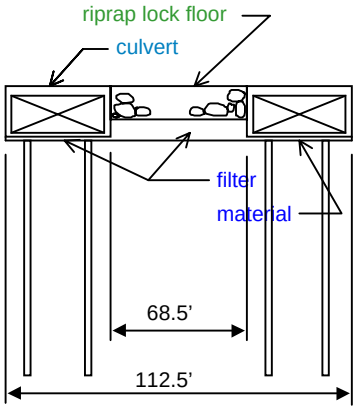

Riprap floor quantity
Volume= 11,956.7 CY
or 16,739.3 TONS

Filter material quantity
Volume= 12,932.1 CY
or 18,105.0 TONS

Bearing piles
precast floor slabs= 4,104.0 LF
precast culvert= 15,504.0 LF
Total Bearing Pile 19,608.0 LF

Length of floor = 1,270.0 ft width of floor = 73.0 ft

Note: For quantities change the RED values in the cells of the dimensioned cross section shown.

US Wall = 994.0 ft DS Wall = 1,016.0 ft

LOCK AND DAM NO.21, LOCATION 4, TYPE C,
1200' LOCK ALTERNATIVE (PILE FOUNDED)

Subject	PILE FOUNDED LOCKS: 1200 ft lock L/D 21 Location 4 Quantities for Type C Lock	Date OCT 1996
Computed by Michael Cummings	Checked	Sheet 3 of 7

cofferdam cell
typical
Area = 1,963.0 ft^2

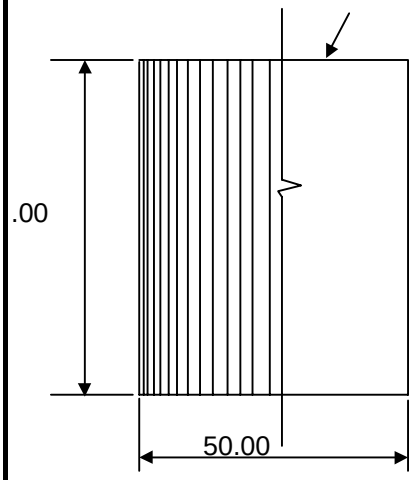

Note: For quantities change the RED values in the cells of the dimensioned cross section shown.

Pile type: PS31
Choose PSA23, PS27.5, or PS31

Area between cells:

Area =	855.0	SF
Distance =	15.91	ft
Length =	1.641	ft
Number in cell =	96	piles
No. in space =	21	piles

UPSTREAM

North or South length:	264.0	.4	modular numbers
East or West length:	330.0	.5	to aid in value search

DOWNSTREAM

North or South length:	264.0	.4	modular numbers
East or West length:	330.0	.5	to aid in value search

US	Total number of cells:	9.0	DS	Total number of cells:	9.0
US	Total number of cells:	11.0	DS	Total number of cells:	11.0

LOCK CHAMBER WALLS:

A. WALL MONOLITHS

1. River side walls
(a) Cast in place concrete
Volume = #REF! CY
(b) Tremie concrete
Volume = ######## CY
(c) Pre-cast concrete
Volume = .0 CY
(d) Pre-cast concrete (approach wall)
Volume = 0.0 CY
(e) Tremie concrete (approach wall)
Volume = - CY

1. Land side walls
(a) Cast in place concrete
Volume = #REF! CY
(b) Tremie concrete
Volume = ######## CY
(c) Pre-cast concrete
Volume = .0 CY
(d) Pre-cast concrete (approach wall)
Volume = 0.0 CY
(e) Tremie concrete (approach wall)
Volume = - CY

B. GATE MONOLITHS

1. Upstream cast in place concrete
Volume = 16,982.2 CY
Piles = 2600 LF

1. Downstream cast in place concrete
Volume = 20,485.9 CY
Piles = 3000 LF

LOCK AND DAM NO.21, LOCATION 4, TYPE C,
1200' LOCK ALTERNATIVE (PILE FOUNDED)

Subject	PILE FOUNDED LOCKS: 1200 ft lock L/D 21 Location 4 Quantities for Type C Lock	Date OCT 1996
Computed by Michael Cummings	Checked	Sheet 4 of 7

SILLS:

Length = 120.0 ft **Volume =** 7,893.0 CY of CIP concrete
111.0 ft
8.0 ft

COFFERDAM CELLS:

Upstream riverside
Total = piles
Total = SF of piling

Downstream riverside
Total = piles
Total = SF of piling

SUMMARY:

Lockwalls:

CONCRETE (Precast)
A. Lockwalls = - CY
B. Approach walls = - CY **Total =** - CY

CONCRETE (CIP, Cast in place)
A. Lockwalls = CY
B. Gate mono's = 37,468.1 CY
C. Sills = 7,893.0 CY **Total =** 45,400.0 CY

CONCRETE (Tremie)
A. Lockwalls = ########
B. Approach walls = - **Total =** ######## CY

HP PILING **Total =** .0 LF

BEARING PILES:
Total = 100,300.0 LF

Lock Floor:

CONCRETE:
A. Tremie concrete = .0 CY
B. Precast = .0 CY

BEARING PILES:
Total = 19,608.0 LF

Lockwall Sheet Pile Cells:

A. SHEETPILES
Total Area = 638,471 SF

B. FILL
Total Volume = 144,242 CY

LOCK AND DAM NO.21, LOCATION 4, TYPE C,
1200' LOCK ALTERNATIVE (PILE FOUNDED)

Subject	PILE FOUNDED LOCKS: L/D 21 Location 4 Quantities for Type C Lock	Date OCT 1996
Computed by Michael Cummings	Checked	Sheet 5 of 7

Upstream Guidewall Cell, Small

(typical)

Area = 700.0 SF

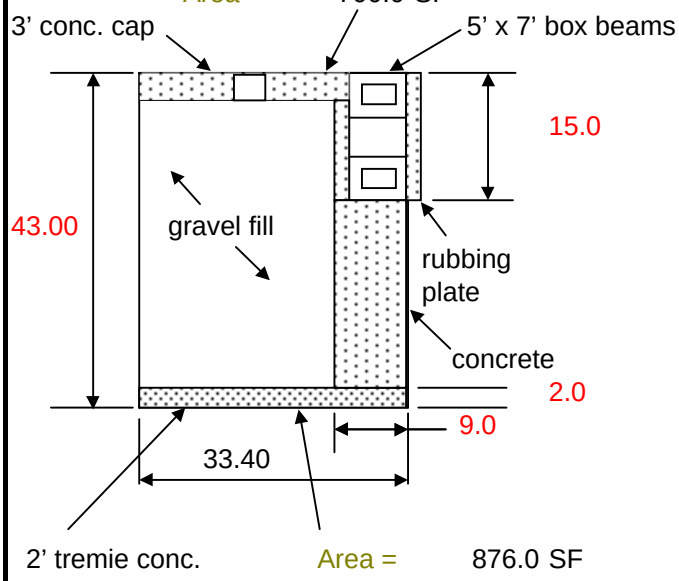

Area = 876.0 SF

Note: For quantities change the RED values in the cells of the dimensioned cross section shown.

Cast-in-Place Concrete			
3' conc. cap	=	77	CY
concrete	=	209	CY
Total	=	286	CY
for 7 cells	=	2,000	CY
Tremie concrete	=	65	CY
for 7 cells	=	455	CY
Precast Concrete			
5'x7' beam	=	889	CY
rubbing pl.	=	500	CY
Total	=	1,389	CY
Gravel fill	=	988	CY
for 7 cells	=	6,916	CY
Sheet Piling	=	4,512	SF
for 7 cells	=	31,584	SF

Upstream Guidewall Cell, Large

(typical)

Area = 2,124.0 SF

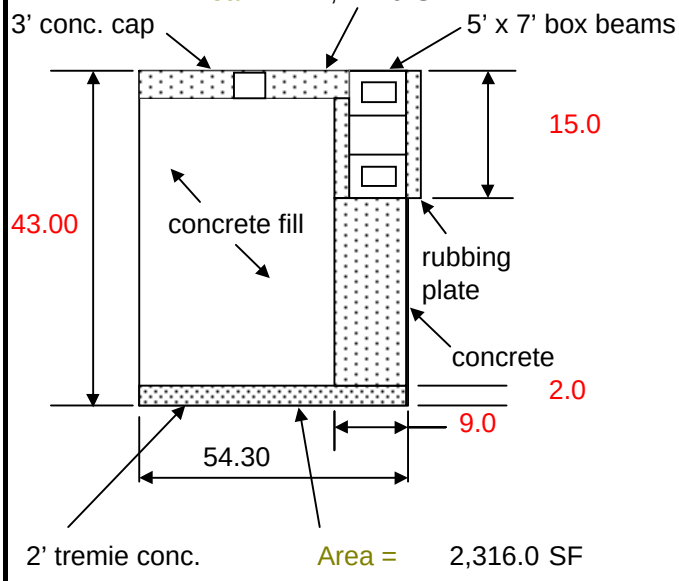

Area = 2,316.0 SF

Note: For quantities change the RED values in the cells of the dimensioned cross section shown.

Cast-in-Place Concrete			
3' conc. cap	=	235	CY
concrete	=	267	CY
Total	=	502	CY
Tremie concrete	=	172	CY
Permanent Cell Fill		2,988	CY
Sheet Piling	=	7,335	SF

LOCK AND DAM NO.21, LOCATION 4, TYPE C,
1200' LOCK ALTERNATIVE (PILE FOUNDED)

Subject	PILE FOUNDED LOCKS: L/D 21 Location 4 Quantities for Type C Lock	Date OCT 1996
Computed by Michael Cummings	Checked	Sheet 6 of 7

Downstream Guidewall Cell, Small

(typical)

Area = 700.0 SF

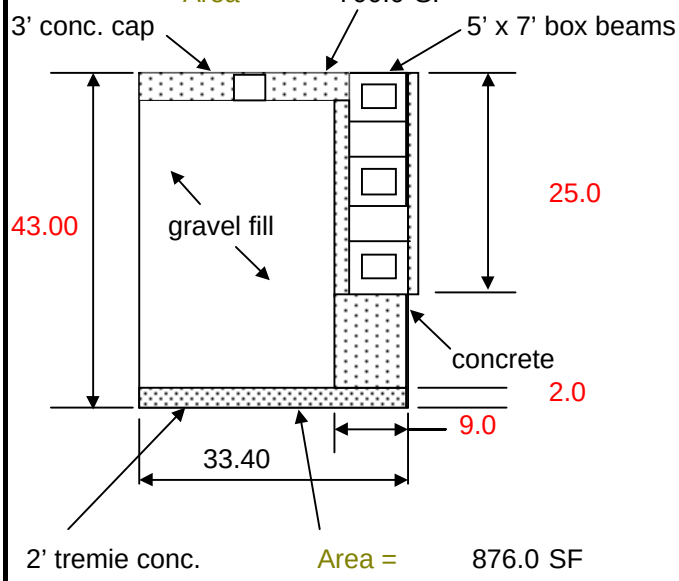

Area = 876.0 SF

Note: For quantities change the RED values in the cells of the dimensioned cross section shown.

Cast-in-Place Concrete			
3' conc. cap	=	77	CY
concrete	=	161	CY
Total	=	237	CY
for 14 cells	=	3,323	CY
Tremie concrete	=	65	CY
for 14 cells	=	910	CY
Precast Concrete			
5'x7' beam	=	2,667	CY
rubbing pl.	=	1,667	CY
Total	=	4,333	CY
Gravel fill	=	988	CY
for 14 cells	=	13,832	CY
Sheet Piling	=	4,512	SF
for 14 cells	=	63,167	SF

Downstream Guidewall Cell, Large

(typical)

Area = 2,124.0 SF

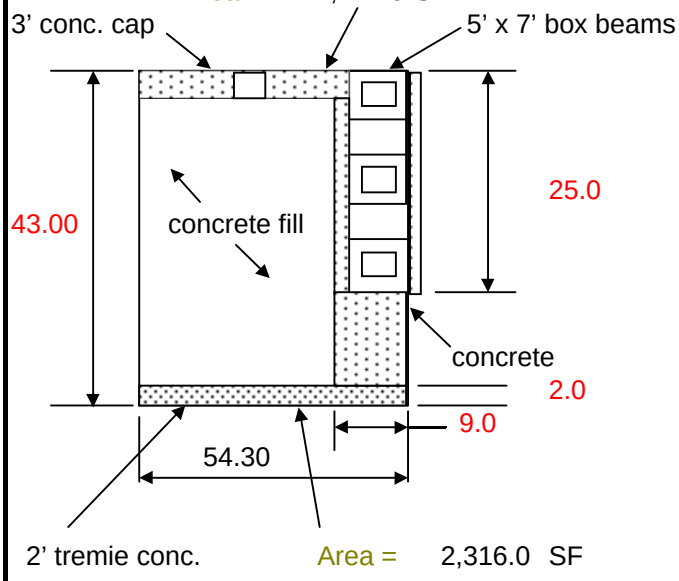

Area = 2,316.0 SF

Note: For quantities change the RED values in the cells of the dimensioned cross section shown.

Cast-in-Place Concrete			
3' conc. cap	=	235	CY
concrete	=	428	CY
Total	=	663	CY
Tremie concrete	=	172	CY
Permanent Cell Fill		2,988	CY
Sheet Piling	=	7,335	SF

LOCK AND DAM NO.21, LOCATION 4, TYPE C,
1200' LOCK ALTERNATIVE (PILE FOUNDED)

Subject	PILE FOUNDED LOCKS: L/D 21 Location 4 Quantities for Type C Lock	Date OCT 1996
Computed by Michael Cummings	Checked	Sheet 7 of 7

LOCK GUIDEWALLS :

A. UPSTREAM GUIDEWALL

1. Cast-in-place concrete

Volume = 2,502 CY

2. Precast concrete

Volume = 1,389 CY

3. Gravel Fill

Volume = 6,916 CY

4. Sheet Piling

Area = 38,919 SF

5. Permanent Cell Fill

Volume = 2,988 CY

6. Tremie Concrete

Volume = 627 CY

B. DOWNSTREAM GUIDEWALL

1. Cast-in-place concrete

Volume = 3,987 CY

2. Precast concrete

Volume = 4,333 CY

3. Gravel Fill

Volume = 13,832 CY

4. Sheet Piling

Area = 70,503 SF

5. Permanent Cell Fill

Volume = 2,988 CY

6. Tremie Concrete

Volume = 1,082 CY

Guidewall Summary

Total Cast-in-Place Concrete	6,489	CY
Total Precast Concrete	5,722	CY
Total Gravel Fill	20,748	CY
Total Sheet Piling	109,422	SF
Total Permanent Cell Fill	5,976	CY
Total Tremie Concrete	1,709	CY

LOCK AND DAM NO. 20, LOCATION 2, TYPE B
1200' LOCK ALTERNATIVE (ROCK-FOUNDED)

CCOUNT CODE	ITEM	QUANTITY	UNIT	UNIT PRICE ($'s)	AMOUNT ($1,000's)
01.	**LANDS AND DAMAGES**				
	REAL ESTATE	1	JOB	SUM	2,500
04.	**DAMS**				
	04 DAMS SUBTOTAL				0
05.	**LOCKS**				
	SITEWORK				
	MOBILIZATION	1	JOB	SUM	8,000
	DEMOLITION	1	JOB	SUM	1,117
	ROCK EXCAVATION	34,730	CY	45	1,563
	LOCK DEWATERING	1	JOB	SUM	1,250
	COFFERDAM REMOVAL	1	JOB	SUM	81
	MARINE FACILITIES, TEMP MOORING STRUCTURE	1	JOB	SUM	3,900
	CONCRETE				
	CAST IN PLACE REINFORCED CONCRETE	21,417	CY	217	4,647
	PRECAST CONCRETE CHAMBER AND APPROACH WALLS, FLOOR	11,110	CY	400	4,444
	TREMIE CONCRETE	9,898	CY	165	1,633
	PRESTRESSING/POST TENSION STEEL	1,110,000	LB	2.5	2,775
	FURNISH AND SET LANDING PADS	74	EA	19000	1,406
	SET PRECAST WALL UNITS	56	EA	16000	896
	FLOAT IN AND SET MITER GATE SILL	1	EA	140000	140
	STEEL REINFORCEMENT	1,285,000	LB	0.75	964
	METALS				
	SHEET PILING	1	JOB	SUM	220
	STRUCTURAL STEEL (GATES, VALVES, TRASHRACKS)	1	JOB	SUM	3,250
	STRUCTURAL STEEL (MISCELLANEOUS - LADDERS, ETC	1	JOB	SUM	3,040
	ELECTRICAL				
	ELECTRICAL SYSTEM	1	JOB	SUM	4,700
	MECHANICAL				
	GATE AND VALVE OPERATING MACHINERY	1	JOB	SUM	2,750
	MECHANICAL SYSTEMS	1	JOB	SUM	3,200
	MISCELLANEOUS	1	JOB	SUM	1,950
	05 LOCKS SUBTOTAL				51,926
05.60.	**GUIDEWALLS**				
	CONCRETE				
	CAST IN PLACE REINFORCED CONCRETE	7,645	CY	280.00	2,141
	PRECAST CONCRETE BEAMS (PRESTRESSED)	4,665	LF	1,170.00	5,458
	PRECAST CONCRETE (W/REINFORCEMENT)	2,107	CY	400.00	843
	TREMIE CONCRETE (WITH REINFORCEMENT)	1,709	CY	210.00	359
	GRAVEL FILL	23,560	CY	15.00	353
	METALS				
	SHEETPILING FOR CELLS (PS31)	97,983	SF	25.00	2,450
	SHEETPILE CUTOFF WALL (PZ35)	26,103	SF	30.00	783
	SHEETPILE RETAINING WALL (PZ40)	24,255	SF	30.00	728
	STRUCTURAL STEEL	1	JOB	SUM	3,811
	05.60 GUIDEWALLS SUBTOTAL				16,925
09.	**CHANNEL WORK**	1	JOB	SUM	8,210
11.	**LEVEES**	1	JOB	SUM	600
	PROJECT SUBTOTAL				80,161
	CONTINGENCIES 25%				20,040
	PROJECT SUBTOTAL WITH CONTINGENCIES				100,000
30.	**PLANNING, ENGINEERING, AND DESIGN (10%)**				10,000
31.	**CONSTRUCTION MANAGEMENT (10%)**				10,000
	PROJECT TOTAL				120,000

		QUANTITY CALCULATIONS									
		L/D 20 Location 2, Type B						Sheet 1_ of 4_			
1	Rock excavation										
	under riverward wall:										
	[(28'x7.4')+(2x7.4'x1'x0.5)+(2x5'x3')+(2x3'x3'x0.5)] x 604'						=	146,409.60	CF	5,422.58	CY
	under landward wall:										
	[(28'x7.4')+(2x7.4'x1'x0.5)+(2x5'x3')+(2x3'x3'x0.5)] x 604'						=	146,409.60	CF	5,422.58	CY
	gate bay monolith										
	70' x 14.9' x 166'						=	173,138.00	CF	6,412.52	CY
	lock chamber	7.1	x	110	x	604	=	471,724.00	CF	17,471.26	CY
										34,728.93	CY
2	Anchor bars (#8 x 14.5')										
	riverward wall										
	(2.67 lbs x 14.5' x 6 ea) x 30 locations = 6,968 LB							6,968.00	LB		
	landward wall										
	(2.67 lbs x 14.5' x 6 ea) x 30 locations = 6,968 LB							6,968.00	LB		
3	Steel footing box (1/2" steel plate)									13,936.00	LB
	riverward wall										
	20.42 lb x [(6'x3'x2)+(4'x3'x2)] = 1,225 LB @ 30 locations							36,750.00	LB		
	landward wall										
	20.42 lb x [(6'x3'x2)+(4'x3'x2)] = 1,225 LB @ 30 locations							36,750.00	LB		
4	Concrete									73,500.00	LB
	riverward wall										
	-bottom lift (tremie)										
	Rock excav. - precast lockwall unit = 5,422.6 CY - 474 CY =									4,948.60	CY
	-2nd lift (reinforced)										
	outside wall, lower section	10.0	x	6.67	x	674	=	44,955.80	CF		
	inside wall, lower section	10.0	x	6.67	x	674	=	44,955.80	CF		
	outside wall, upper section	6.5	x	3.67	x	674	=	16,078.27	CF		
	inside wall, upper section	6.5	x	3.67	x	674	=	16,078.27	CF		
	-3rd lift (reinforced									4,521.04	CY
	one section	5.00	x	24	x	674	=	80,880.00	CF		
	-4th lift (reinforced)									2,995.56	CY
	outside wall	13.0	x	5	x	674	=	43,810.00	CF		
	inside wall	13.0	x	5	x	674	=	43,810.00	CF		
										3,245.19	CY
	landward wall										
	-bottom lift (tremie)										
	Rock excav. - precast lockwall unit = 5,317 CY - 474 CY =									4,843.00	CY
	-2nd lift (reinforced)										
	outside wall, lower section	10.0	x	6.67	x	674	=	44,955.80	CF		
	inside wall, lower section	10.0	x	6.67	x	674	=	44,955.80	CF		
	outside wall, upper section	6.5	x	3.67	x	674	=	16,078.27	CF		
	inside wall, upper section	6.5	x	3.67	x	674	=	16,078.27	CF		
	-3rd lift (reinforced									4,521.04	CY
	one section	5.00	x	24	x	674	=	80,880.00	CF		
										2,995.56	CY
	-4th lift (reinforced)										
	outside wall	13.0	x	5	x	674	=	43,810.00	CF		
	inside wall	13.0	x	5	x	674	=	43,810.00	CF		
										3,245.19	CY
	Total Concrete									31,315.17	CY

LOCK AND DAM NO. 20, LOCATION 2, TYPE C
(ROCK-FOUNDED)

CCOUNT CODE	ITEM	QUANTITY	UNIT	UNIT PRICE ($'s)	AMOUNT ($1,000's)
01.	**LANDS AND DAMAGES**				
	REAL ESTATE	1	JOB	SUM	2,500
04.	**DAMS**				
	04 DAMS SUBTOTAL				0
05.	**LOCKS**				
	SITEWORK				
	MOBILIZATION	1	JOB	SUM	8,000
	DEMOLITION	1	JOB	SUM	1,117
	ROCK EXCAVATION	29,367	CY	45	1,322
	LOCK DEWATERING	1	JOB	SUM	1,250
	COFFERDAM REMOVAL	1	JOB	SUM	81
	MARINE FACILITIES, TEMP MOORING STRUCTURE	1	JOB	SUM	3,900
	CONCRETE				
	CAST IN PLACE REINFORCED CONCRETE	25,525	CY	217	5,539
	PRECAST CONCRETE CHAMBER AND APPROACH WALLS	2,400	CY	400	960
	TREMIE CONCRETE	9,808	CY	165	1,618
	PRESTRESSING STEEL	240,000	LB	2.5	600
	FURNISH AND SET LANDING PADS	18	EA	19000	342
	SET CULVERT UNITS	88	EA	16000	1,408
	FLOAT IN AND SET MITER GATE SILL	1	EA	140000	140
	STEEL REINFORCEMENT	1,531,500	LB	0.75	1,149
	TIMBER				
	12"X12" TIMBER FENDERS	13,480	LF	25	337
	METALS				
	SHEET PILING AND BRACING	1	JOB	SUM	2,900
	STRUCTURAL STEEL (GATES, VALVES, TRASHRACKS)	1	JOB	SUM	3,250
	STRUCTURAL STEEL (MISCELLANEOUS - LADDERS, ETC.)	1	JOB	SUM	3,040
	ELECTRICAL				
	ELECTRICAL SYSTEM	1	JOB	SUM	4,700
	MECHANICAL				
	GATE AND VALVE OPERATING MACHINERY	1	JOB	SUM	2,750
	MECHANICAL SYSTEMS	1	JOB	SUM	3,200
	MISCELLANEOUS	1	JOB	SUM	1,950
	05 LOCKS SUBTOTAL				49,552
05.60.	**GUIDEWALLS**				
	CONCRETE				
	CAST IN PLACE REINFORCED CONCRETE	7,042	CY	280.00	1,972
	PRECAST CONCRETE BEAMS (PRESTRESSED)	4,680	LF	1,170.00	5,476
	PRECAST CONCRETE (W/REINFORCEMENT)	2,114	CY	400.00	846
	TREMIE CONCRETE (WITH REINFORCEMENT)	1,709	CY	210.00	359
	GRAVEL FILL	22,504	CY	15.00	338
	METALS				
	SHEETPILING FOR CELLS (PS31)	94,165	SF	25.00	2,354
	SHEETPILE CUTOFF WALL (PZ35)	25,086	SF	30.00	753
	SHEETPILE RETAINING WALL (PZ40)	23,310	SF	30.00	699
	STRUCTURAL STEEL	1	JOB	SUM	3,811
	05.60 GUIDEWALLS SUBTOTAL				16,606
09.	**CHANNEL WORK**	1	JOB	SUM	8,210
11.	**LEVEES**	1	JOB	SUM	600
	PROJECT SUBTOTAL				77,469
	CONTINGENCIES 25%				19,367
	PROJECT SUBTOTAL WITH CONTINGENCIES				97,000
30.	**PLANNING, ENGINEERING, AND DESIGN (10%)**				10,000
31.	**CONSTRUCTION MANAGEMENT (10%)**				10,000
	PROJECT TOTAL				$ 117,000

		QUANTITY CALCULATIONS									
		L/D 20 Location 2, Type C						Sheet 1_ of 3_			
1	Rock excavation										
	under riverward wall:										
	[(28'x4')+(2x8'x2'x0.5)+(2x1'x8')+(2x2'x4')+(2x4'x1'x0.5)] x 674'						=	110,536.00	CF	4,093.93	CY
	under landward wall:										
	[(28'x4')+(2x8'x2'x0.5)+(2x1'x8')+(2x2'x4')+(2x4'x1'x0.5)] x 674'						=	110,536.00	CF	4,093.93	CY
	gate bay monolith										
	70' x 13' x 110' = 100,100 CF						=	100,100.00	CF	3,707.41	CY
	lock chamber	7.1	x	110	x	604	=	471,724.00	CF	17,471.26	CY
										29,366.52	CY
2	Concrete										
	riverward wall										
	-bottom lift (tremie)										
	Rock excav. - sheet pile wall = 4,904 CY - 0 CY =									4,904.00	CY
	-2nd lift (reinforced)										
	outside wall	15.0	x	6	x	674	=	60,660.00	CF		
	inside wall	15.0	x	5	x	674	=	50,550.00	CF		
	-3rd lift (reinforced)									4,118.89	CY
	elev.T - elev. A	5.00	x	26	x	674	=	87,620.00	CF		
	-4th lift (reinforced)									3,245.19	CY
	outside wall	7	x	9	x	674	=	42,462.00	CF		
	inside wall	7	x	8	x	674	=	37,744.00	CF		
	landward wall									2,970.59	CY
	-bottom lift (tremie)										
	Rock excav. - sheet pile wall = 4,904 CY - 0 CY =									4,904.00	CY
	-2nd lift (reinforced)										
	outside wall	15.0	x	6	x	674	=	60,660.00	CF		
	inside wall	15.0	x	5	x	674	=	50,550.00	CF		
	-3rd lift (reinforced									4,118.89	CY
	elev.T - elev. A	5.00	x	27	x	674	=	90,990.00	CF		
	-4th lift (reinforced)									3,370.00	CY
	outside wall	7	x	5	x	674	=	23,590.00	CF		
	inside wall	7	x	5	x	674	=	23,590.00	CF		
										1,747.41	CY
	Total Concrete									29,378.96	CY
3	Steel tie rods @ 11' centers	61	x	2	=	122	EA				
4	Steel sheet pile wall, PZ27										
	riverward wall	41.0	x	2	x	674	=	55,268.00	SF		
	landward wall	41.0	x	2	x	674	=	55,268.00	SF		
										110,536.00	SF
5	Timber waler	10	x	2	x	674	=	13,480.00	LF		
6	Precast culvert liner										
	riverward wall	40.5	x	637	x	0.75	=	19,348.88	CF		
	landward wall	40.5	x	637	x	0.75	=	19,348.88	CF		
								38,697.75	CF		
										1,433.25	CY

LOCK AND DAM NO. 22, LOCATION 2, TYPE R
1200' LOCK ALTERNATIVE (ROCK-FOUNDED)

CCOUNT CODE	ITEM	QUANTITY	UNIT	UNIT PRICE ($'s)	AMOUNT ($1,000's)
01.	**LANDS AND DAMAGES**				
	REAL ESTATE	1	JOB	SUM	150
04.	**DAMS**				
	04 DAMS SUBTOTAL				0
05.	**LOCKS**				
	SITEWORK				
	MOBILIZATION	1	JOB	SUM	8,000
	DEMOLITION	1	JOB	SUM	500
	ROCK EXCAVATION	8,247	CY	45	371
	OVERBURDEN EXCAVATION	40,900	CY	4.5	184
	BACKFILL	16,700	CY	10	167
	LOCK DEWATERING	1	JOB	SUM	1,250
	MARINE FACILITIES, TEMP MOORING STRUCTURE	1	JOB	SUM	3,900
	CONCRETE				
	UNDERBASE GROUTING	460	CY	200	92
	CAST IN PLACE REINFORCED CONCRETE	15,415	CY	280	4,316
	PRECAST CONCRETE	5,019	CY	400	2,008
	GATE MONOLITH TREMIE CONCRETE	1,650	CY	210	347
	CONCRETE CELL FILL	29,510	CY	200	5,902
	FURNISH AND SET LANDING PADS	16	EA	19000	304
	FLOAT IN AND SET MITER GATE SILL	4	EA	100000	400
	SET PRECAST WALL PANELS	48	EA	8000	384
	SET PRECAST BEAMS	50	EA	3000	150
	ANCHOR FOR LANDWALL	1,875	EA	50	94
	METALS				
	RIVER WALL SHEET PILING (PS-31)	100,200	SF	22.04	2,208
	STAY IN PLACE TEMPLATES	20	EA	50,000	1,000
	STRUCTURAL STEEL (GATES, VALVES, TRASHRACKS)	1	JOB	SUM	3,250
	STRUCTURAL STEEL (MISCELLANEOUS - LADDERS, ETC.)	1	JOB	SUM	3,040
	ROCK BOLTS & SUPPORTS FOR PRECAST BEAMS	140	EA	350	49
	FASTNERS FOR PRECAST PANELS	336	EA	100	34
	HIGH CAPACITY ROCK ANCHORS	53	EA	8700	461
	ELECTRICAL				
	ELECTRICAL SYSTEM	1	JOB	SUM	4,700
	MECHANICAL				
	GATE AND VALVE OPERATING MACHINERY	1	JOB	SUM	2,750
	MECHANICAL SYSTEMS	1	JOB	SUM	3,200
	MISCELLANEOUS	1	JOB	SUM	1,950
	05 LOCKS SUBTOTAL				51,010

LOCK AND DAM NO. 22, LOCATION 2, TYPE R
1200' LOCK ALTERNATIVE (ROCK-FOUNDED)

05.60.	**GUIDEWALLS**				
	SITEWORK				
	ROCK EXCAVATION	210	CY	45.00	9
	OVERBURDEN EXCAVATION	3060	CY	4.50	14
	CONCRETE				
	CAST IN PLACE REINFORCED CONCRETE	500	CY	280	140
	PRECAST CONCRETE BEAMS (PRESTRESSED)	2,025	LF	2,000	4,050
	TREMIE CONCRETE (WITH REINFORCEMENT)	2,515	CY	210	528
	METALS				
	STEEL CYLINDERS FOR CELLS (FILLED W CONCR	5	EA	450,000	2,250
	NOSE STELL CYLINDER (FILLED WITH CONCRETE	1	EA	900,000	900
	ANCHOR BARS FOR BEAMS	2,010	LF	87.60	176
	WALL ARMOR (14 STRIPS)	369,600	LB	4.20	1,552
	STEEL RUB PLATE AND ACCESSORIES	63,600	LB	6.00	382
	LADDERS AND MISC METALS	100,000	LB	3.00	300
	HANDRAILLING (ALUM.)	1,400	LF	125.40	176
	CHECKPOST	30	EA	1,546.00	46
	ACCESS HATCH	1	JOB	SUM	33
	ELECTRICAL				
	ELECTRICAL SYSTEM	1	JOB	SUM	78
	05.60 GUIDEWALLS SUBTOTAL				10,634
09.	**CHANNEL WORK**	1	JOB	SUM	3,200
	PROJECT SUBTOTAL				64,995
	CONTINGENCIES 25%				16,249
	PROJECT SUBTOTAL WITH CONTINGENCIES				81,243
30.	**PLANNING, ENGINEERING, AND DESIGN (10%)**				8,124
31.	**CONSTRUCTION MANAGEMENT (10%)**				8,124
	PROJECT TOTAL				$ 97,492

TOTAL BASIC LOCK COST (O4., 05., 05.60.) WITH CONTINGENCIES, PED, & CM*	**$ 97,000**

*(EXCLUDES REAL ESTATE, RELOCATION, AND CHANNEL WORK WHICH ARE MORE SITE-SPECIFIC.)

Location 3, Type B, Rock

ACCOUNT CODE	ITEM L/D 20	QUANTITY	UNIT	NIT PRICE ($'s)	AMOUNT ($1,000's)
01.	LANDS AND DAMAGES				
	REAL ESTATE	1	JOB	SUM	1,330
04.	DAMS				0
05.	LOCKS				
	SITEWORK				
	MOBILIZATION	1	JOB	SUM	8,000
	DEMOLITION AND REHABILITATION	1	JOB	SUM	1,800
	DREDGING	39,400	CY	4.50	177
	ROCK EXCAVATION	32,900	CY	45.00	1,481
	EXTENSION OF EXISTING DOWNSTREAM GUIDEWALL	1	JOB	SUM	7,700
	COFFERDAM FILL (DOWNSTREAM CLOSURE)	4317	CY	14.50	63
	EXISTING LOCK DEWATERING	1	JOB	SUM	440
	NEW LOCK DEWATERING	1	JOB	SUM	440
	CONCRETE				
	CAST IN PLACE REINFORCED CONCRETE	53,550	CY	280.00	14,994
	PRECAST CONCRETE (W/REINFORCEMENT)	9,900	CY	400.00	3,960
	SET LANDING PADS & WALL UNITS	1	JOB	SUM	3,070
	TREMIE CONCRETE (WITH REINFORCEMENT)	4,690	CY	210.00	985
	GRAVEL FILL	10,570	CY	15.00	159
	METALS				
	SHEETPILING (DOWNSTREAM CLOSURE, PSA23)	15,300	SF	30.00	459
	STRUCTURAL STEEL (GATES, VALVES, TRASHRACKS,	1	JOB	SUM	3,250
	STRUCTURAL STEEL (MISCELLANEOUS - LADDERS, ET	1	JOB	SUM	2,500
	ELECTRICAL				
	ELECTRICAL SYSTEM	1	JOB	SUM	4,700
	MECHANICAL				
	GATE AND VALVE OPERATING MACHINERY	1	JOB	SUM	2,053
	MECHANICAL SYSTEMS	1	JOB	SUM	2,900
	MISCELLANEOUS	1	JOB	SUM	5,913
	05 LOCKS SUBTOTAL				65,043
05.60.	GUIDEWALLS				
	CONCRETE				
	CAST IN PLACE REINFORCED CONCRETE	12,950	CY	280.00	3,626
	PRECAST CONCRETE BEAMS (PRESTRESSED)	6,000	LF	1,170.00	7,020
	PRECAST CONCRETE (W/REINFORCEMENT)	2,611	CY	400.00	1,044
	TREMIE CONCRETE (WITH REINFORCEMENT)	15,186	CY	210.00	3,189
	GRAVEL FILL	24,825	CY	15.00	372
	METALS				
	SHEETPILING FOR CELLS (PS31)	128,217	SF	25.00	3,205
	SHEETPILE CUTOFF WALL (PZ35)	32,775	SF	30.00	983
	STRUCTURAL STEEL	1	JOB	SUM	3,811
	05.60 GUIDEWALLS SUBTOTAL				23,252
09.	CHANNEL WORK	1	JOB	SUM	6,800
	PROJECT SUBTOTAL				96,424
	CONTINGENCIES (25%)				24,576
	PROJECT SUBTOTAL WITH CONTINGENCIES				121,000
30.	PLANNING, ENGINEERING, AND DESIGN (10%)				12,000
31.	CONSTRUCTION MANAGEMENT (10%)				12,000
	PROJECT TOTAL				145,000

TOTAL BASIC LOCK COST (O4., 05., 05.60.) WITH CONTINGENCIES, PED, & CM* **$ 145,000**

*(EXCLUDES REAL ESTATE, RELOCATION, AND CHANNEL WORK WHICH ARE MORE SITE-SPECIFIC.)

Subject	ROCK FOUNDED LOCKS: L/D 20 Location 3 Quantities for Type B Lock, Modular Construction	Date SEP 96
Computed by Michael Cummings	Checked David R. Wehrley	Sheet 1 of 5

Riverward Lockwall
(Including the miter gate monolith)

Note: For quantities change the Blue values in the cross section.

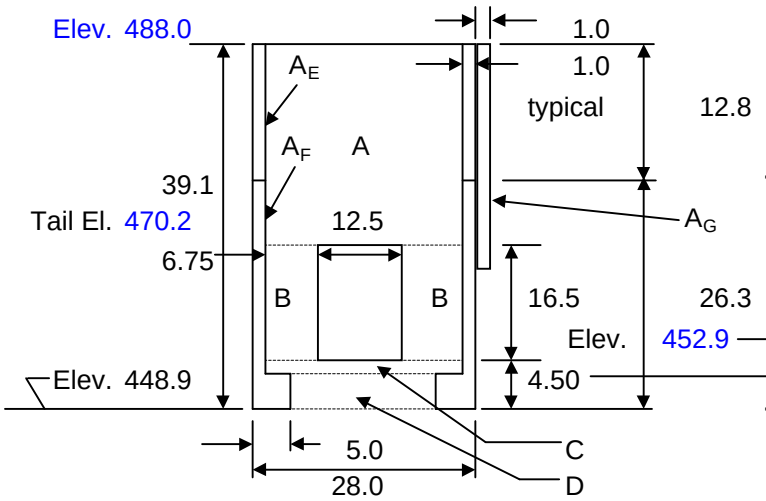

Cast in place concrete		
A_A =	470.6	SF
A_B =	222.8	SF
A_C =	26.0	SF
Total Area =	719.4	SF
Volume =	33,197	CY
Pre-cast concrete		
A_E =	25.6	SF
A_F =	80.6	SF
A_G =	26.8	SF
Total Area =	133.0	SF
Volume =	6,138	CY
Tremie concrete		
A_D =	63.0	SF
Volume =	2,907	CY

Wall Length = 1,246 ft

Landward Lockwall ("l-wall")
(Including the miter gate monolith)

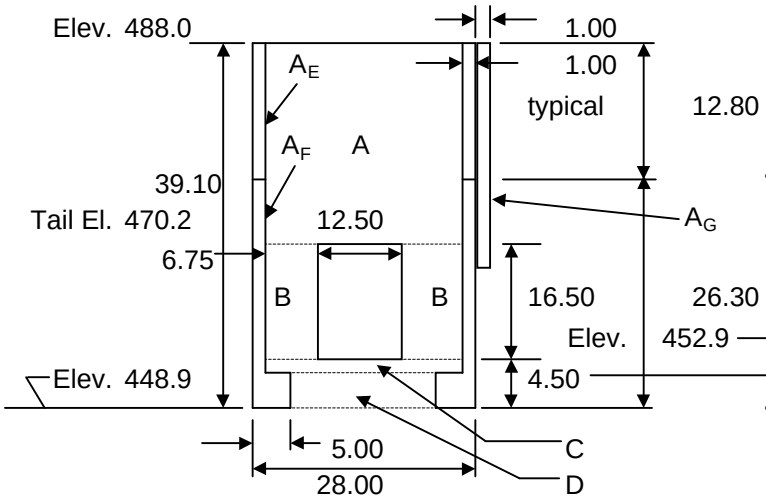

Cast in place concrete		
A_A =	470.6	SF
A_B =	222.8	SF
A_C =	26.0	SF
Total Area =	719.4	SF
Volume =	20,355	CY
Pre-cast concrete		
A_E =	25.6	SF
A_F =	80.6	SF
A_G =	26.8	SF
Total Area =	133.0	SF
Volume =	3,763	CY
Tremie concrete		
A_D =	63.0	SF
Volume =	1,783	CY

Wall Length = 764 ft

Subject		Date
L/D 20 Location 3 Quantities for Type B Lock, Modular Construction		SEP 96
Computed by Michael Cummings	Checked David R. Wehrley	Sheet 2 of 5

Typical cell for downstream closure cofferdam

Change blue value.

Plan Area = 707 ft^2

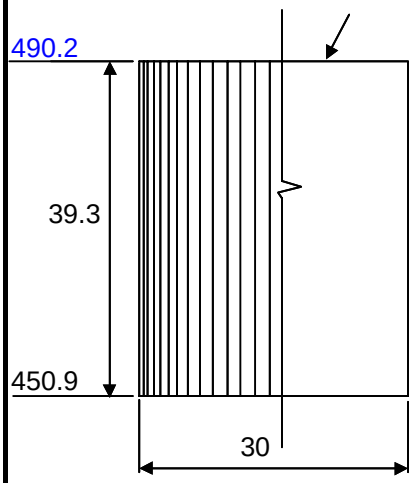

Pile type: psa23 Length = 1.33 ft
Choose PSA23, PS27.5, or PS31

Area of arcs =	845	SF	(Ref. platr3b1.dgn)
Area of 3 cells =	2,121	SF	
Fill Quantity =	4,317	CY	
Circumference of 1 cell =	94.2	FT	
Perimeter of all arcs =	106.9	FT	(Ref. platr3b1.dgn)
Sheetpile Quantity =	15,313	SF	

QUANTITY WRAP-UP (EXCLUDING GUIDEWALLS):

A. CAST-IN-PLACE CONCRETE

Riverwall =	33,197	CY
I-wall =	20,355	CY
Total =	**53,550**	CY

B. PRECAST CONCRETE

Riverwall =	6,138	CY
I-wall =	3,763	CY
Total =	**9,900**	CY

C. TREMIE CONCRETE

Riverwall =	2,907	CY
I-wall =	1,783	CY
Total =	**4,690**	CY

D. COFFERDAM FILL

Total =	**4,320**	CY

E. COFFERDAM SHEETPILING

Total =	**15,300**	SF

Subject		Date
L/D 20 Location 3 Quantities for Type B Lock, Guardwalls		SEP 96
Computed by Michael Cummings	Checked David R. Wehrley	Sheet 3 of 5

Upstream Guardwall Cell (typical of 14)

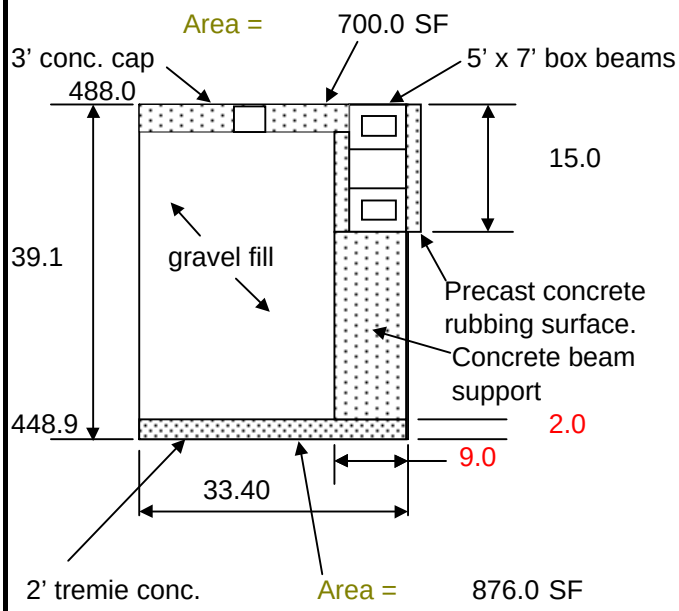

Cast-in-Place Concrete

3' conc. cap	=	78	CY
Beam support	=	182	CY
Total	=	259	CY
For 14 cells	=	3,631	CY
Tremie concrete	=	65	CY
For 14 cells	=	910	CY

Precast Concrete (for entire guardwall length)

5'x7' beam	=	1,741	CY
rubbing pl.	=	979	CY
Total	=	2,720	CY
Gravel fill	=	887	CY
For 14 cells	=	12,412	CY
Sheet Piling	=	4,103	SF
For 14 cells	=	57,438	SF

End Cell of Guardwall

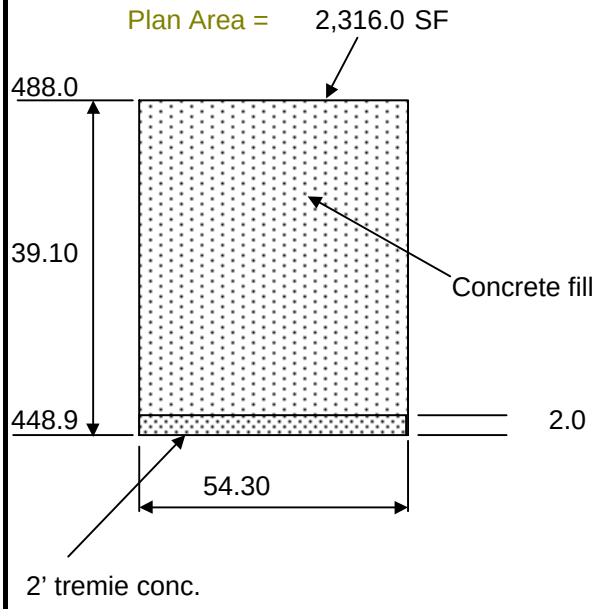

Cast-in-Place Concrete Volume	=	3,182	CY
Tremie concrete	=	172	CY
Sheet Piling (PS31)	=	6,670	SF

Subject		Date
L/D 20 Location 3 Quantities for Type B Lock, Crane-In Construcion		SEP 96
Computed by	Checked	Sheet of
Michael Cummings	David R. Wehrley	4 5

Downstream Guardwall Cell (typical of 14)

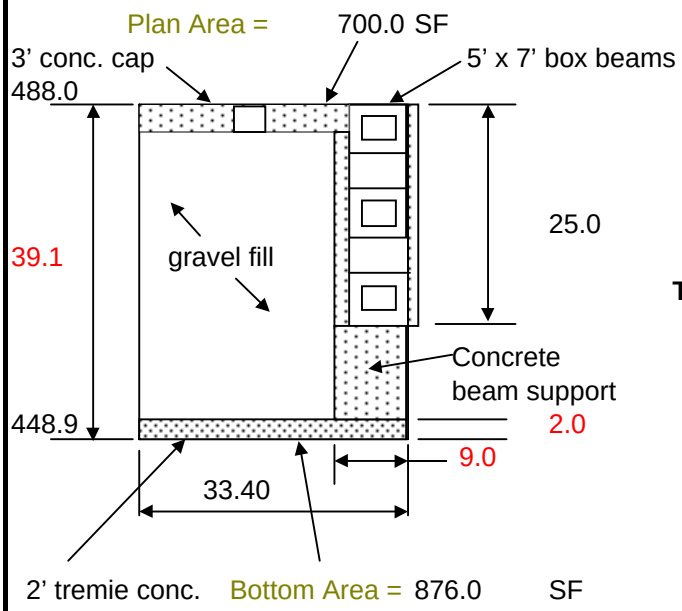

Cast-in-Place Concrete

3' conc. cap	=	78	CY
Beam support	=	133	CY
Total	=	211	CY
for 14 cells	=	2,954	CY
Tremie concrete	=	65	CY
for 14 cells	=	910	CY
Precast Concrete			
5'x7' beam	=	2,611	CY
rubbing pl.	=	1,632	CY
Total	=	4,243	CY
Gravel fill	=	887	CY
for 14 cells	=	12,412	CY
Sheet Piling	=	4,103	SF
for 14 cells	=	57,438	SF

End Cell of Guardwall

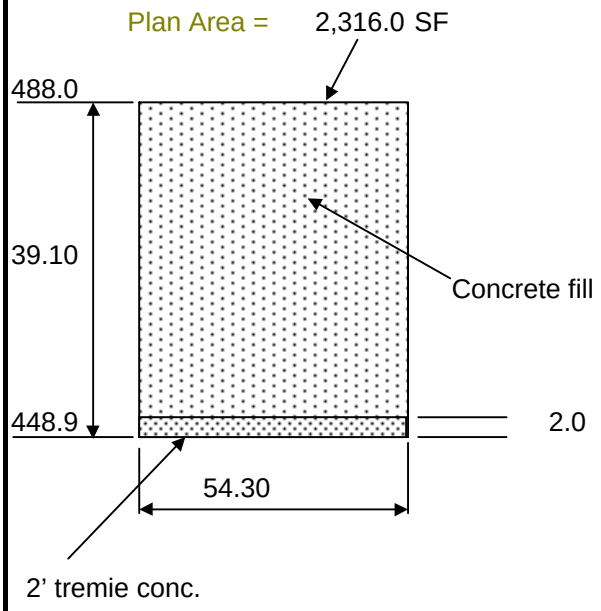

Cast-in-Place Concrete Volume	=	3,182	CY
Tremie concrete	=	172	CY
Sheet Piling (PS31)	=	6,670	SF

Subject		Date
L/D 20 Location 3 Quantities for Type B Lock, Crane-In Construcion		SEP 96
Computed by	Checked	Sheet of
Michael Cummings	David R. Wehrley	5 5

GUARDWALL QUANTITY WRAP-UP :

A. CAST-IN-PLACE CONCRETE

Upstream =	6,813	CY
Downstream =	6,137	CY
TOTAL=	12,950	CY

B. PRECAST CONCRETE

Upstream Beams =	1,741	CY
ownstream Beams =	2,611	CY
TOTAL=	4,352	CY

Upstream Panels =	979	CY
Downstream Panels =	1,632	CY
TOTAL=	2,611	CY

C. GRAVEL FILL

Upstream =	12,412	CY
Downstream =	12,412	CY
TOTAL=	24,825	CY

D. SHEETPILING

Upstream =	64,108	CY
Downstream =	64,108	CY
TOTAL=	128,217	CY

E. TREMIE CONCRETE

Upstream =	1,082	CY
Downstream =	1,082	CY
TOTAL=	2,164	CY

LOCATION 3, TYPE C
1200' LOCK ALTERNATIVE (ROCK FOUNDED)

CCOUNT CODE	ITEM L/D20	QUANTITY	UNIT	UNIT PRICE ($'s)	AMOUNT ($1,000's)
01.	**LANDS AND DAMAGES**				
	REAL ESTATE	1	JOB	SUM	1,330
04.	**DAMS**				
	04 DAMS SUBTOTAL				0
05.	**LOCKS**				
	SITEWORK				
	MOBILIZATION	1	JOB	SUM	8,000
	DEMOLITION	1	JOB	SUM	1,800
	DREDGING	39,400	CY	4.50	177
	ROCK EXCAVATION	32,900	CY	45	1,481
	EXTENSION OF EXISTING DOWNSTREAM GUIDEWALL	1	JOB	SUM	7,700
	COFFERDAM FILL (DOWNSTREAM CLOSURE)	4,317	CY	14.50	63
	EXISTING LOCK DEWATERING	1	JOB	SUM	440
	NEW LOCK DEWATERING	1	JOB	SUM	440
	CONCRETE				
	CAST IN PLACE REINFORCED CONCRETE	24,633	CY	280	6,897
	PRECAST CONCRETE (W/REINFORCEMENT)	19,109	CY	400	7,643
	TREMIE CONCRETE	2,596	CY	165	428
	PERMANENT CELL FILL - GRAVEL (RIVERWALL)	30,624	CY	15.00	459
	PERMANENT CELL FILL - CONCRETE (I-WALL)	14,839	CY	280.00	4,155
	PRECAST PANELS FOR CELLULAR WALL (RIVERWALL)	1,942	CY	600	1,165
	PRECAST PANELS FOR CELLULAR WALL (I-WALL)	1,862	CY	800	1,490
	METALS				
	SHEET PILING (DOWNSTREAM CLOSURE, PSA23)	15,313	SF	25.00	383
	SHEET PILING - PERMANENT PSA23 (LOCKWALL)	199,456	SF	25.00	4,986
	STRUCTURAL STEEL (GATES, VALVES, TRASHRACKS)	1	JOB	SUM	3,250
	STRUCTURAL STEEL (MISCELLANEOUS - LADDERS, ETC.)	1	JOB	SUM	2,500
	ELECTRICAL				
	ELECTRICAL SYSTEM	1	JOB	SUM	4,700
	MECHANICAL				
	GATE AND VALVE OPERATING MACHINERY	1	JOB	SUM	2,750
	MECHANICAL SYSTEMS	1	JOB	SUM	3,200
	MISCELLANEOUS	1	JOB	SUM	6,411
	05 LOCKS SUBTOTAL				70,518
05.60.	**GUIDEWALLS**				
	CONCRETE				
	CAST IN PLACE REINFORCED CONCRETE	6,585	CY	280.00	1,844
	PRECAST CONCRETE BEAMS (PRESTRESSED)	6,000	LF	1,170.00	7,020
	PRECAST CONCRETE PANELS (W/REINFORCEMENT)	2,611	CY	400.00	1,044
	TREMIE CONCRETE (WITH REINFORCEMENT)	8,529	CY	210.00	1,791
	GRAVEL FILL	24,825	CY	15.00	372
	METALS				
	SHEETPILING FOR CELLS (PS31)	128,217	SF	25.00	3,205
	SHEETPILE CUTOFF WALL (PZ35)	34,000	SF	30.00	1,020
	STRUCTURAL STEEL	1	JOB	SUM	3,811
	05.60 GUIDEWALLS SUBTOTAL				20,108
09.	**CHANNEL WORK**	1	JOB	SUM	6,800
	PROJECT SUBTOTAL				98,756
	CONTINGENCIES 25%				24,244
	PROJECT SUBTOTAL WITH CONTINGENCIES				123,000
30.	**PLANNING, ENGINEERING, AND DESIGN (10%)**				12,000
31.	**CONSTRUCTION MANAGEMENT (10%)**				12,000
	PROJECT TOTAL				147,000

TOTAL BASIC LOCK COST (O4., 05., 05.60.) WITH CONTINGENCIES, PED, & CM* **$ 147,000**

*(EXCLUDES REAL ESTATE, RELOCATION, AND CHANNEL WORK WHICH ARE MORE SITE-SPECIFIC.)

Subject	ROCK FOUNDED LOCKS: L/D 20 Location 3, Quantities for Type C Lock	Date Jun 97
Computed by David R. Wehrley	Checked DRW	Sheet 1 of 6

Crane-In Gate Monolith

Note: For quantities change the values in the Blue cells of the cross section.

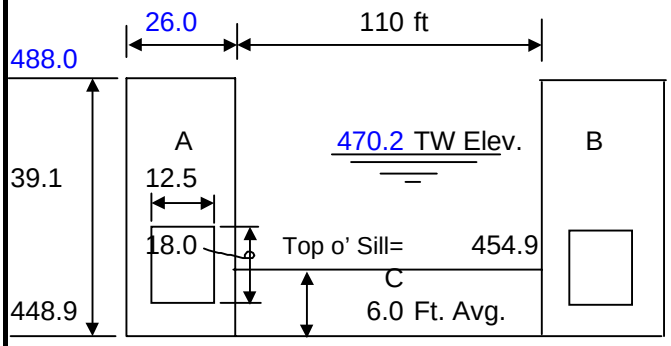

Precast concrete miter gate monolith

A =	6,743	CY
B =	6,743	CY
C =	5,622	CY
Total =	**19,109**	CY

67.6

Monolith Length (into the paper) = 230.0 ft

Typical sheet pile cell for the Riverwall

Cells are 33.8 ft. center-to-center.

Top Area = 616.0 ft^2

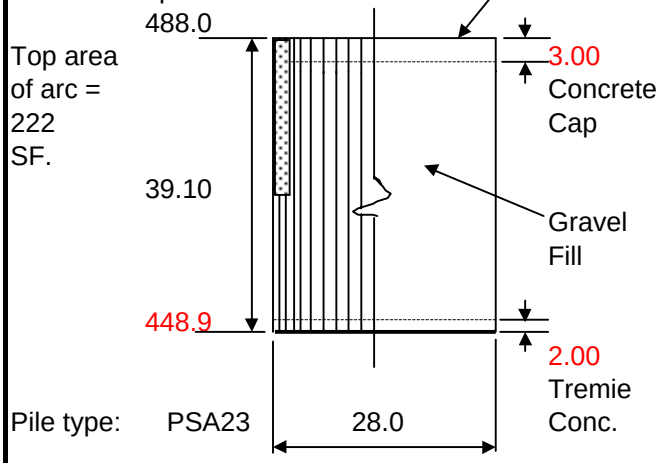

Sheet Piling =	3,439	SF/cell
Sheet Piling =	1,220	SF/arc
Total Sheet Piling =	**134,817**	SF
Cell Fill (gravel) =	**30,624**	CY Total
Precast concrete (panels) =	**1,942**	CY
C.I.P. concrete cap =	**2,694**	CY
Tremie Concrete =	**1796**	CY
Riverwall Length =	978.0	

Typical cell for the Intermediate lockwall

Cells are 31.4 ft. center-to-center.

Top Area = 531.0 ft^2

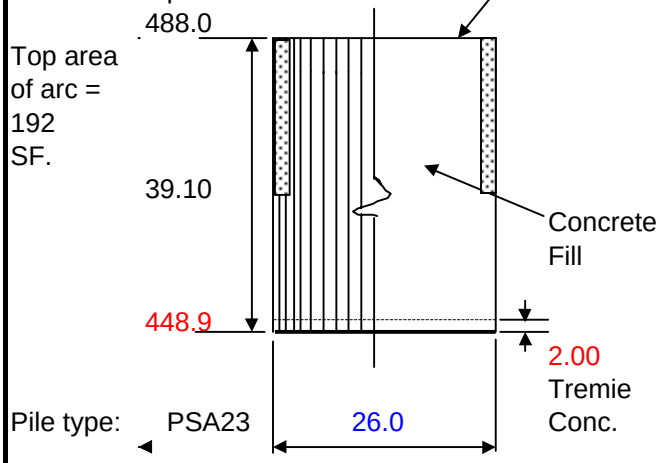

Sheet Piling =	3,194	SF/cell
Sheet Piling =	1,134	SF/arc
Total Sheet Piling =	**64,639**	SF
Cell Fill (concrete) =	**14,839**	CY Total
Precast concrete (panels) =	**1,862**	CY
Tremie Concrete =	**800**	CY
I-wall Length =	469.0	

Subject		Date
L/D 20 Location 3, Quantities for Type C Lock		Jun 97
Computed by	Checked	Sheet of
David R. Wehrley	DRW	2 6

In ground culvert

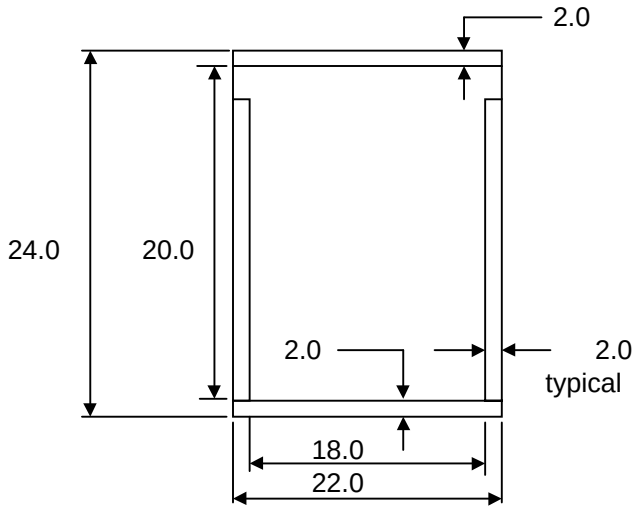

Length =	862.0	ft
Branch length =	267.0	ft
Main culvert concrete =	5,364	CY
Branch culvert concrete =	1,661	CY
Total =	**7,100**	CY

Typical cell of cofferdam

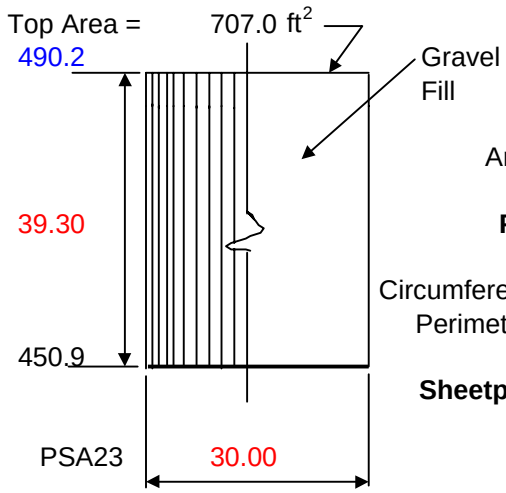

Area of arcs =	845	SF	(Ref. platr3b1.dgn)
Area of 3 cells =	2,121	SF	
Fill Quantity =	**4,317**	CY	
Circumference of 1 cell =	94.2	FT	
Perimeter of all arcs =	106.9	FT	(Ref. platr3b1.dgn)
Sheetpile Quantity =	**15,313**	SF	

Subject		Date
L/D 20 Location 3, Quantities for Type C Lock		Jun 97
Computed by	Checked	Sheet of
David R. Wehrley	DRW	3 6

QUANTITY SUMMARY (Excluding Guardwalls):

A. CAST-IN-PLACE CONCRETE

F/E CULVERT =	7,100	CY
CELL CAPS =	2,694	CY
CONCRETE CELL FILL =	14,839	CY
TOTAL =	**24,633**	CY

B. PRECAST CONCRETE

ITER GATE FLOAT-IN MONO=	19,109	CY
LOCKWALL PANELS =	3,804	CY
TOTAL =	**22,912**	CY

C. TREMIE CONCRETE

LOCKWALLS =	**2596**	CY

D. SHEETPILING

LOCKWALLS (PSA23) =	199,456	SF
OWNSTREAM COFFERDAM =	15,313	SF
TOTAL =	**214,769**	SF

E. GRAVEL FILL

LOCKWALLS =	30,624	CY
COFFERDAM =	4,317	CY
TOTAL =	**34,941**	CY

Subject		Date
L/D 20 Location 3 Quantities for Type B Lock, Guardwalls		Jun 97
Computed by	Checked	Sheet of
Michael Cummings	David R. Wehrley	4 6

Upstream Guardwall Cell (typical of 14)

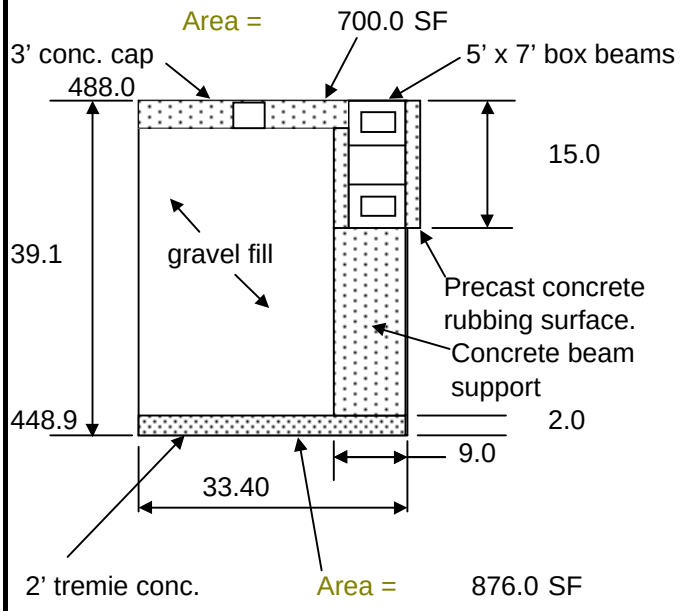

Cast-in-Place Concrete

3' conc. cap	=	78	CY
Beam support	=	182	CY
Total	=	259	CY
For 14 cells	=	3,631	CY
Tremie concrete	=	65	CY
For 14 cells	=	910	CY
Precast Concrete (for entire guardwall length)			
5'x7' beam	=	1,741	CY
rubbing pl.	=	979	CY
Total	=	2,720	CY
Gravel fill	=	887	CY
For 14 cells	=	12,412	CY
Sheet Piling	=	4,103	SF
For 14 cells	=	57,438	SF

End Cell of Guardwall

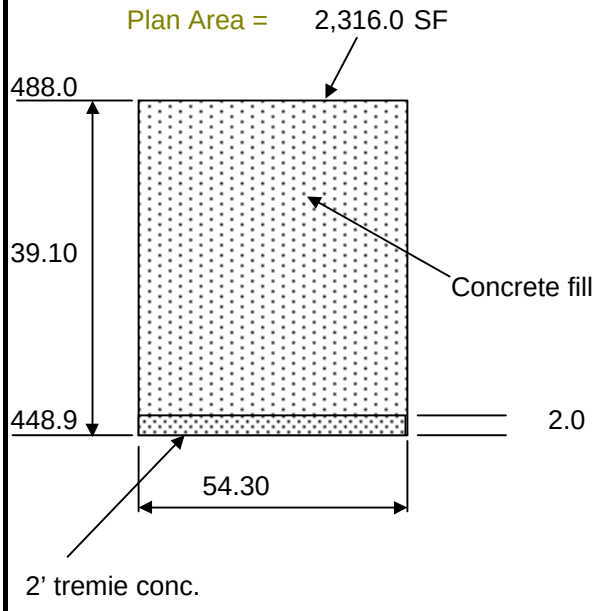

Concrete Fill (tremie price)

Volume	=	3,182	CY
Tremie concrete	=	172	CY
Sheet Piling (PS31)	=	6,670	SF

Subject		Date
L/D 20 Location 3 Quantities for Type B Lock, Crane-In Construcion		Jun 97
Computed by: Michael Cummings	Checked: David R. Wehrley	Sheet 5 of 6

Downstream Guardwall Cell (typical of 14)

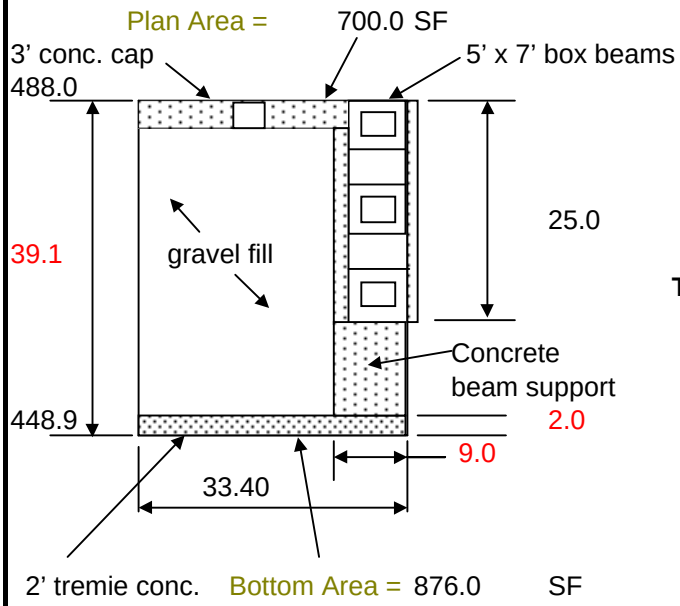

Cast-in-Place Concrete

3' conc. cap	=	78	CY
Beam support	=	133	CY
Total	=	211	CY
for 14 cells	=	2,954	CY
Tremie concrete	=	65	CY
for 14 cells	=	910	CY
Precast Concrete			
5'x7' beam	=	2,611	CY
rubbing pl.	=	1,632	CY
Total	=	4,243	CY
Gravel fill	=	887	CY
for 14 cells	=	12,412	CY
Sheet Piling	=	4,103	SF
for 14 cells	=	57,438	SF

End Cell of Guardwall

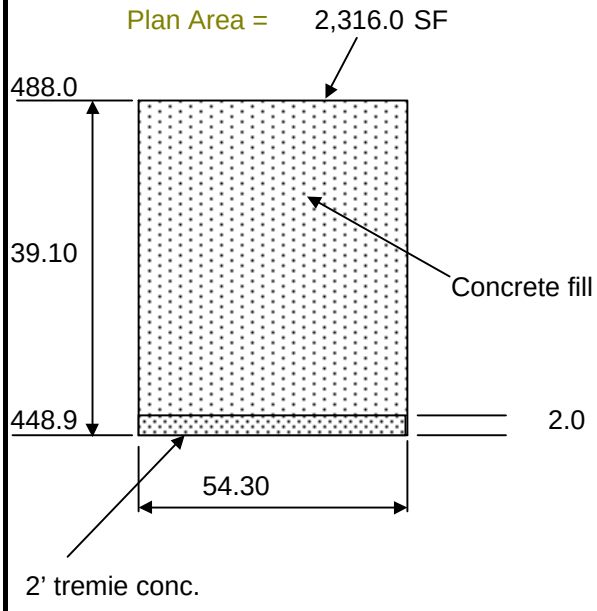

Concrete Fill (tremie price)			
Volume	=	3,182	CY
Tremie concrete	=	172	CY
Sheet Piling (PS31)	=	6,670	SF

Subject		Date
L/D 20 Location 3 Quantities for Type B Lock, Crane-In Construcion		Jun 97
Computed by	Checked	Sheet of
Michael Cummings	David R. Wehrley	6 6

GUARDWALL QUANTITY WRAP-UP :

A. CAST-IN-PLACE CONCRETE

Upstream =	3,631	CY
Downstream =	2,954	CY
TOTAL=	6,585	CY

B. PRECAST CONCRETE

Upstream Beams =	1,741	CY
ownstream Beams =	2,611	CY
TOTAL=	4,352	CY

Upstream Panels =	979	CY
Downstream Panels =	1,632	CY
TOTAL=	2,611	CY

C. GRAVEL FILL

Upstream =	12,412	CY
Downstream =	12,412	CY
TOTAL=	24,825	CY

D. SHEETPILING

Upstream =	64,108	CY
Downstream =	64,108	CY
TOTAL=	128,217	CY

E. TREMIE CONCRETE

Upstream =	4,264	CY
Downstream =	4,264	CY
TOTAL=	8,529	CY

LOCK AND DAM NO.20, LOCATION 4, TYPE A
1200' LOCK ALTERNATIVE (ROCK FOUNDED)

ACCOUNT CODE	ITEM	QUANTITY	UNIT	UNIT PRICE ($'s)	AMOUNT ($1,000's)
01.	**LANDS AND DAMAGES**				
	REAL ESTATE	1	JOB	SUM	20
04.	**DAMS**				
	DEMOLITION (TAINTER GATE BAY NO.1)	1	JOB	SUM	1,504
	CONCRETE (TIE-IN TO EXISTING LOCK)	362	CY	280.00	101
	MISCELLANEOUS	1	JOB	SUM	150
	REPLACEMENT TAINTER GATE	1	JOB	SUM	10,200
	04 DAMS SUBTOTAL				11,955
05.	**LOCKS**				
	SITEWORK				
	MOBILIZATION	1	JOB	SUM	8,000
	DEMOLITION (AUXILIARY LOCK AREA)	1	JOB	SUM	5,700
	DREDGING	86,500	CY	4.50	389
	ROCK EXCAVATION	50,000	CY	45	2,250
	EXTENSION OF EXISTING UPSTREAM GUIDEWALL	1	JOB	SUM	7,700
	COFFERDAM FILL	167,280	CY	14.50	2,426
	COFFERDAM DEWATERING	1	JOB	SUM	8,000
	CONCRETE				
	CAST IN PLACE REINFORCED CONCRETE	74,700	CY	280	20,916
	GRAVEL FILL	223,800	CY	15.00	3,357
	METALS				
	SHEET PILING (CLOSURE, PS31)	436,300	SF	25.00	10,908
	STRUCTURAL STEEL (GATES, VALVES, TRASHRACKS)	1	JOB	SUM	3,250
	STRUCTURAL STEEL (MISCELLANEOUS - LADDERS, ETC.)	1	JOB	SUM	2,500
	ELECTRICAL				
	ELECTRICAL SYSTEM	1	JOB	SUM	4,700
	MECHANICAL				
	GATE AND VALVE OPERATING MACHINERY	1	JOB	SUM	2,750
	MECHANICAL SYSTEMS	1	JOB	SUM	3,200
	MISCELLANEOUS	1	JOB	SUM	9,022
	05 LOCKS SUBTOTAL				95,067
05.60.	**GUIDEWALLS**				
	CONCRETE				
	CAST IN PLACE REINFORCED CONCRETE	3,998	CY	280.00	1,119
	PRECAST CONCRETE BEAMS (W/REINFORCEMENT)	8,960	LF	1,170.00	10,483
	TREMIE CONCRETE	1,709	CY	210.00	359
	METALS				
	SHEETPILING FOR CELLS (PS31)	71,251	SF	25.00	1,781
	STRUCTURAL STEEL	1	JOB	SUM	900
	05.60 GUIDEWALLS SUBTOTAL				14,643
09.	**CHANNEL WORK**	1	JOB	SUM	4,130
	PROJECT SUBTOTAL				125,815
	CONTINGENCIES 25%				31,454
	PROJECT SUBTOTAL WITH CONTINGENCIES				157,000
30.	**PLANNING, ENGINEERING, AND DESIGN (10%)**				16,000
31.	**CONSTRUCTION MANAGEMENT (10%)**				16,000
	PROJECT TOTAL				189,000

LOCK AND DAM NO.20, LOCATION 20, TYPE A
1200' LOCK ALTERNATIVE (ROCK FOUNDED)

Subject	ROCK FOUNDED LOCKS: L/D 20 Location 4 Quantities for Type A Lock, Crane-In Construction	Date Sep 96
Computed by Michael Cummings	Checked	Sheet 1 of 6

Gate Monolith

Note: For quantities change the RED values in the cells of the dimensioned cross section shown.

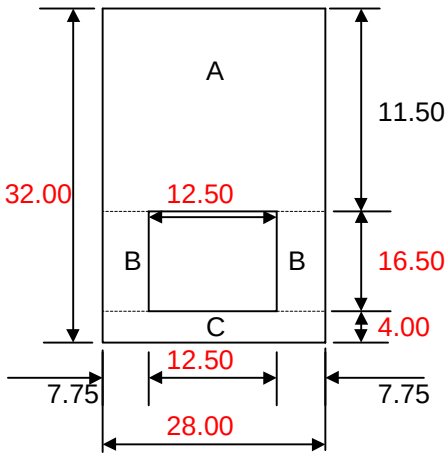

Cast in place concrete

A_g =	322.0	ft^2	
B_g =	255.8	ft^2	
C_g =	112.0	ft^2	
D_g =	206.3	ft^2	CULVERT
Total =	689.8	ft^2	

hght chk = 32.00 left
hght chk = 32.00 right

US lngth = 265.0 ft DS lngth = 240.0 ft

Lock Wall
typical

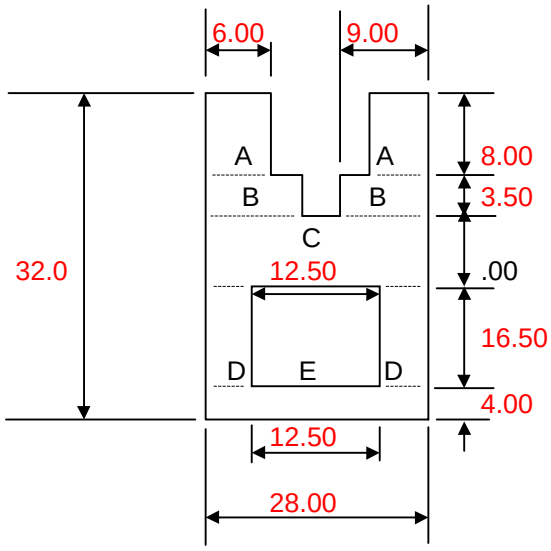

Cast in place concrete

A_w =	96.00	ft^2	
B_w =	63.00	ft^2	
C_w =	.00	ft^2	
D_w =	255.75	ft^2	
E_w =	206.25	ft^2	CULVERT
F_w =	112.00	ft^2	
Total =	526.75	ft^2	

hght chk = 32.00 left
hght chk = 32.00 right

RS Wall = 1,050.0 ft LS Wall = 1,050.0 ft

LOCK AND DAM NO.20, LOCATION 20, TYPE A
1200' LOCK ALTERNATIVE (ROCK FOUNDED)

Subject		Date
L/D 20 Location 4 Quantities for Type A Lock, Crane-In Construction		Sep 96
Computed by Michael Cummings	Checked	Sheet 2 of 6

Typical cell for cofferdam

Area = 1,736.0 ft^2

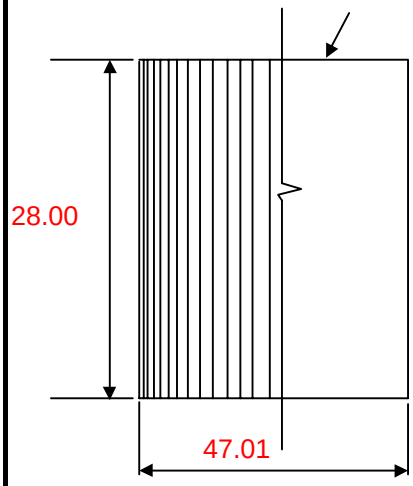

Pile type: PS31
Choose PSA23, PS27.5, or PS31

Area between cells:

Area =	773.0	ft^2
Distance =	15.28	ft
Length =	1.64	ft
Number in cell =	90	piles
No. in space =	20	piles
US Length =	2,650.0	ft
DS Length =	2,650.0	ft

LOCK CHAMBER WALLS:

A. WALL MONOLITHS

1. River side walls

(a) Cast in place concrete

Volume = 20,484.7 CY

(b) Precast concrete

Volume = .0 CY

1. Land side walls

(a) Cast in place concrete

Volume = 20,484.7 CY

(b) Precast concrete

Volume = .0 CY

B. GATE MONOLITHS

1. Upstream cast in place concrete

Volume = 13,539.5 CY

2. Upstream precast concrete

Volume = .0 CY

1. Downstream cast in place concrete

Volume = 12,262.2 CY

2. Downstream precast concrete

Volume = .0 CY

LOCK AND DAM NO.20, LOCATION 20, TYPE A
1200' LOCK ALTERNATIVE (ROCK FOUNDED)

Subject		Date
L/D 20 Location 4 Quantities for Type A Lock, Crane-In Construcion		Sep 96
Computed by Michael Cummings	Checked	Sheet 3 of 6

COFFERDAMS:

1. Cofferdam #1, Upstream

Number = 43.0 cells

Total = 9,460.0 piles

2. Cofferdam #2, Upstream

Number = 43.0 cells

Total = 223,766.0 CY fill volume

SILLS:

Length = 120.0 ft
Width = 111.0 ft
Height = 8.0 ft

Volume = 7,893.3 CY

SUMMARY:

CONCRETE (Cast in place)

A.	Lockwalls =	40,969.4 CY
B.	Gate monoliths =	25,801.8 CY
C.	Sills =	7,893.3 CY
	Total =	74,700.0 CY

PRECAST CONCRETE

A.	Lockwalls =	.0 CY
B.	Gate monoliths =	.0 CY
	Total =	.0 CY

SHEETPILES

A.	Required number for cofferdams =	9,460.0 piles
B.	Required number for walls =	0 piles
	Total =	9,500.0 piles
	Total =	436,300.0 SF of piling

FILL

A.	Required fill for cofferdams =	223,766.0 CY
	Total =	223,800.0 CY

LOCK AND DAM NO.20, LOCATION 20, TYPE A
1200' LOCK ALTERNATIVE (ROCK FOUNDED)

Subject		Date
L/D 20 Location 3 Quantities for Type B Lock, Crane-In Construcion		Sep 96
Computed by Michael Cummings	Checked	Sheet 4 of 6

Upstream Guidewall Cell, Small

(typical)

Area = 700.0 SF

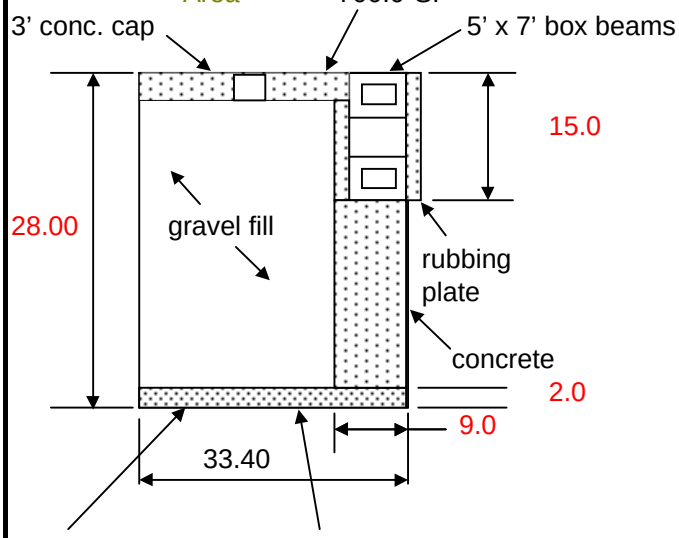

Area = 876.0 SF

Note: For quantities change the RED values in the cells of the dimensioned cross section shown.

Cast-in-Place Concrete

3' conc. cap	=	77	CY
concrete	=	104	CY
Total	=	180	CY
for 7 cells	=	1,262	CY
Tremie concrete	=	65	CY
for 7 cells	=	455	CY
Precast Concrete			
5'x7' beam	=	889	CY
rubbing pl.	=	500	CY
Total	=	1,389	CY
Gravel fill	=	598	CY
for 7 cells	=	4,186	CY
Sheet Piling	=	2,938	SF
for 7 cells	=	20,566	SF

Upstream Guidewall Cell, Large

(typical)

Area = 2,124.0 SF

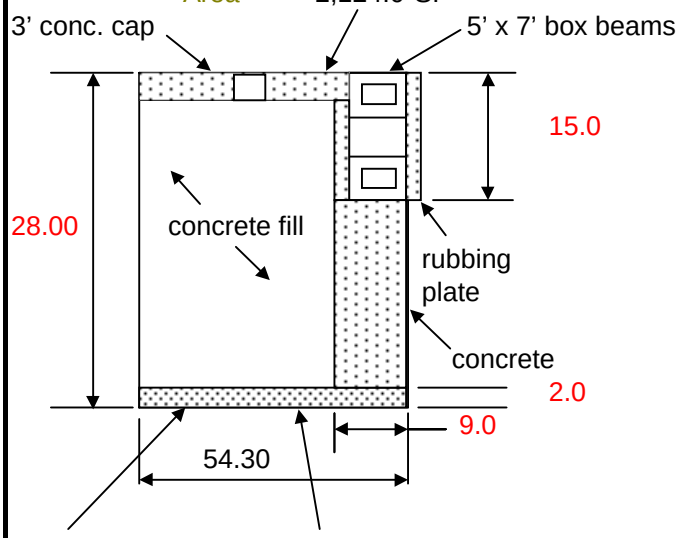

Area = 2,316.0 SF

Note: For quantities change the RED values in the cells of the dimensioned cross section shown.

Cast-in-Place Concrete

3' conc. cap	=	235	CY
concrete	=	128	CY
Total	=	363	CY
Tremie concrete	=	172	CY
Permanent Cell Fill		1,808	CY
Sheet Piling	=	4,776	SF

LOCK AND DAM NO.20, LOCATION 20, TYPE A
1200' LOCK ALTERNATIVE (ROCK FOUNDED)

Subject		Date
L/D 20 Location 3 Quantities for Type B Lock, Crane-In Construcion		Sep 96
Computed by Michael Cummings	Checked	Sheet 5 of 6

Downstream Guidewall Cell, Small

(typical)

Area = 700.0 SF

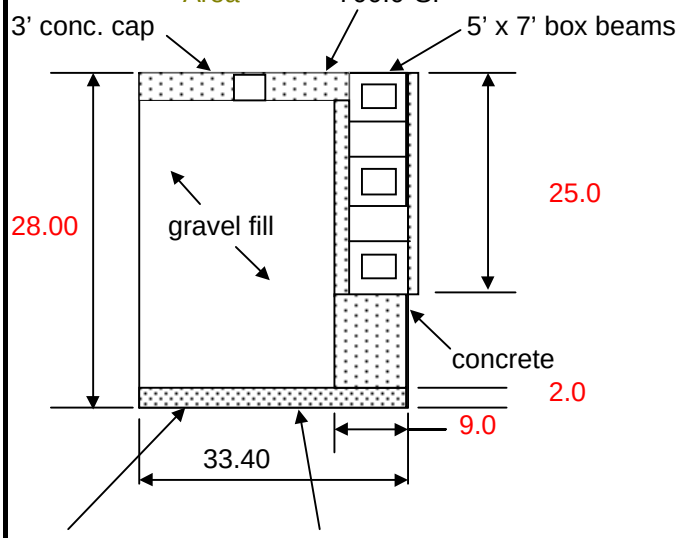

Area = 876.0 SF

Note: For quantities change the RED values in the cells of the dimensioned cross section shown.

Cast-in-Place Concrete			
3' conc. cap	=	77	CY
concrete	=	55	CY
Total	=	132	CY
for 14 cells	=	1,848	CY
Tremie concrete	=	65	CY
for 14 cells	=	910	CY
Precast Concrete			
5'x7' beam	=	2,667	CY
rubbing pl.	=	1,667	CY
Total	=	4,333	CY
Gravel fill	=	598	CY
for 14 cells	=	8,372	CY
Sheet Piling	=	2,938	SF
for 14 cells	=	41,132	SF

Downstream Guidewall Cell, Large

(typical)

Area = 2,124.0 SF

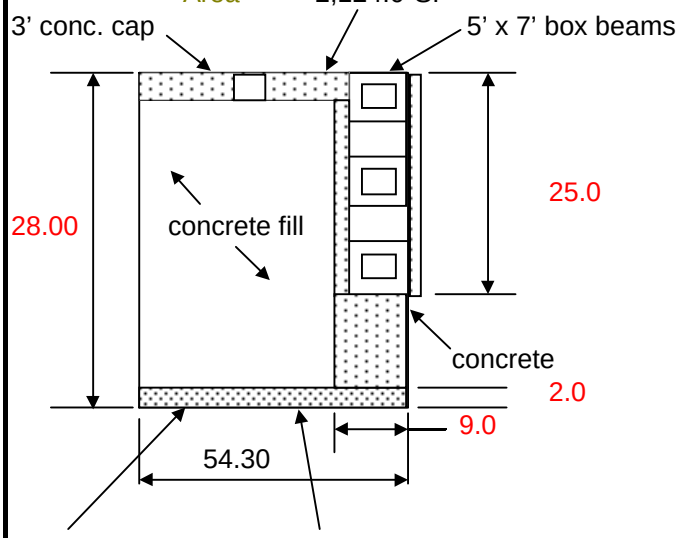

Area = 2,316.0 SF

Note: For quantities change the RED values in the cells of the dimensioned cross section shown.

Cast-in-Place Concrete			
3' conc. cap	=	235	CY
concrete	=	289	CY
Total	=	524	CY
Tremie concrete	=	172	CY
Permanent Cell Fill		1,808	CY
Sheet Piling	=	4,776	SF

LOCK AND DAM NO.20, LOCATION 20, TYPE A
1200' LOCK ALTERNATIVE (ROCK FOUNDED)

Subject		Date
L/D 20 Location 3 Quantities for Type B Lock, Crane-In Construcion		Sep 96
Computed by Michael Cummings	Checked	Sheet 6 of 6

LOCK GUIDEWALLS :

A. UPSTREAM GUIDEWALL

1. Cast-in-place concrete

Volume = 1,626 CY

2. Precast concrete

Volume = 1,389 CY

3. Gravel Fill

Volume = 4,186 CY

4. Sheet Piling

Area = 25,343 SF

5. Permanent Cell Fill

Volume = 1,808 CY

6. Tremie Concrete

Volume = 627 CY

B. DOWNSTREAM GUIDEWALL

1. Cast-in-place concrete

Volume = 2,372 CY

2. Precast concrete

Volume = 4,333 CY

3. Gravel Fill

Volume = 8,372 CY

4. Sheet Piling

Area = 45,909 SF

5. Permanent Cell Fill

Volume = 1,808 CY

6. Tremie Concrete

Volume = 1,082 CY

Guidewall Summary

Total Cast-in-Place Concrete	3,998	CY
Total Precast Concrete	5,722	CY
Total Gravel Fill	12,558	CY
Total Sheet Piling	71,251	SF
Total Permanent Cell Fill	3,617	CY
Total Tremie Concrete	1,709	CY

LOCK AND DAM NO.20, LOCATION 4, TYPE B
1200' LOCK ALTERNATIVE (ROCK FOUNDED)

ACCOUNT CODE	ITEM	QUANTITY	UNIT	UNIT PRICE ($'s)	AMOUNT ($1,000's)
01.	**LANDS AND DAMAGES**				
	REAL ESTATE	1	JOB	SUM	20
04.	**DAMS**				
	DEMOLITION (TAINTER GATE BAY NO.1)	1	JOB	SUM	1,504
	CONCRETE (TIE-IN TO EXISTING LOCK)	362	CY	280.00	101
	MISCELLANEOUS	1	JOB	SUM	150
	REPLACEMENT TAINTER GATE	1	JOB	SUM	10,200
	04 DAMS SUBTOTAL				11,955
05.	**LOCKS**				
	SITEWORK				
	MOBILIZATION	1	JOB	SUM	8,000
	DEMOLITION (AUXILIARY LOCK AREA)	1	JOB	SUM	5,700
	DREDGING	86,500	CY	4.50	389
	ROCK EXCAVATION	50,000	CY	45	2,250
	EXTENSION OF EXISTING UPSTREAM GUIDEWALL	1	JOB	SUM	7,700
	COFFERDAM FILL	167,280	CY	14.50	2,426
	COFFERDAM DEWATERING	1	JOB	SUM	8,000
	CONCRETE				
	CAST IN PLACE REINFORCED CONCRETE	78,200	CY	280	21,896
	GRAVEL FILL	12,600	CY	15.00	189
	METALS				
	SHEET PILING (CLOSURE, PS31)	31,600	SF	25.00	790
	STRUCTURAL STEEL (GATES, VALVES, TRASHRACKS)	1	JOB	SUM	3,250
	STRUCTURAL STEEL (MISCELLANEOUS - LADDERS, ETC.)	1	JOB	SUM	2,500
	ELECTRICAL				
	ELECTRICAL SYSTEM	1	JOB	SUM	4,700
	MECHANICAL				
	GATE AND VALVE OPERATING MACHINERY	1	JOB	SUM	2,750
	MECHANICAL SYSTEMS	1	JOB	SUM	3,200
	MISCELLANEOUS	1	JOB	SUM	9,022
	05 LOCKS SUBTOTAL				82,762
05.60.	**GUIDEWALLS**				
	CONCRETE				
	CAST IN PLACE REINFORCED CONCRETE	4,263	CY	280.00	1,194
	PRECAST CONCRETE BEAMS (W/REINFORCEMENT)	8,960	LF	1,170.00	10,483
	TREMIE CONCRETE	1,709	CY	210.00	359
	METALS				
	SHEETPILING FOR CELLS (PS31)	75,323	SF	25.00	1,883
	STRUCTURAL STEEL	1	JOB	SUM	900
	05.60 GUIDEWALLS SUBTOTAL				14,819
09.	**CHANNEL WORK**	1	JOB	SUM	4,133
	PROJECT SUBTOTAL				113,689
	CONTINGENCIES 25%				28,422
	PROJECT SUBTOTAL WITH CONTINGENCIES				142,000
30.	**PLANNING, ENGINEERING, AND DESIGN (10%)**				14,000
31.	**CONSTRUCTION MANAGEMENT (10%)**				14,000
	PROJECT TOTAL				170,000

LOCK AND DAM NO.20, LOCATION 4, TYPE B
1200' LOCK ALTERNATIVE (ROCK FOUNDED)

Subject	ROCK FOUNDED LOCKS: L/D 20 Location 4 Quantities for Type B Lock, Crane-In Construction	Date Sep 96
Computed by Michael Cummings	Checked	Sheet 1 of 7

Crane - In Gate Monolith

Note: For quantities change the Red values in the cells of the dimensioned cross section shown.

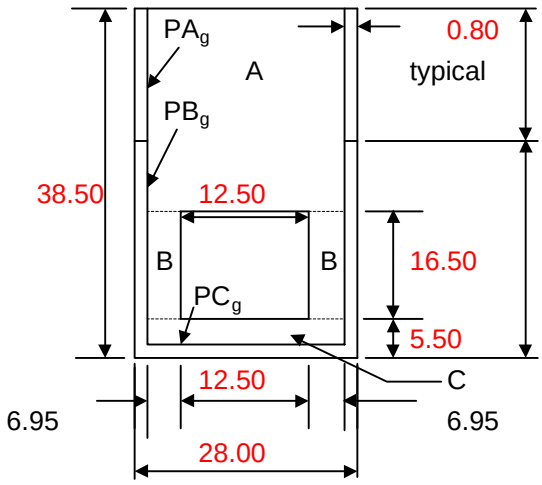

Cast in place concrete

A_g =	435.6	ft^2	
B_g =	229.4	ft^2	
C_g =	124.1	ft^2	
D_g =	206.3	ft^2	CULVERT
Total =	789.0	ft^2	

Pre-cast concrete

PA_g =	20.8	ft^2
PB_g =	40.8	ft^2
PC_g =	21.1	ft^2
Total =	82.7	ft^2

hght chk = 38.50 left
hght chk = 38.50 right

DS lngth = 250.0 ft

Crane - in Lock Wall

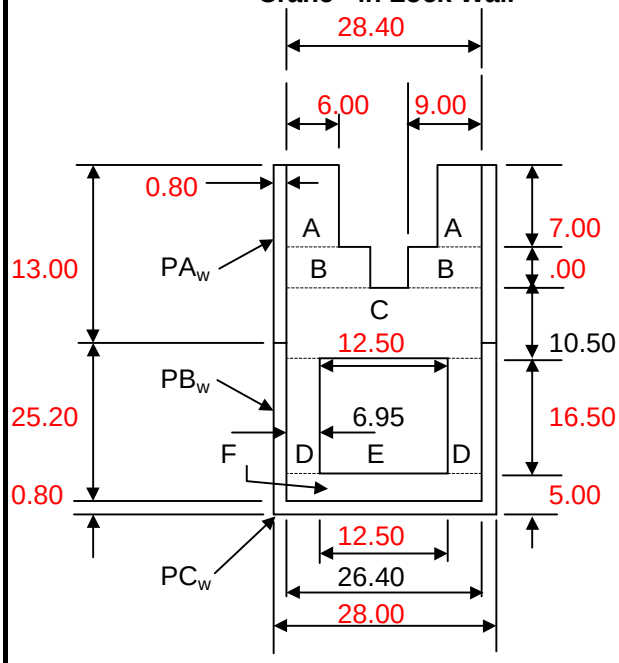

Cast in place concrete

A_w =	84.00	ft^2	
B_w =	.00	ft^2	
C_w =	298.20	ft^2	
D_w =	229.35	ft^2	
E_w =	206.25	ft^2	CULVERT
F_w =	110.88	ft^2	
Total =	722.43	ft^2	

Pre-cast concrete

PA_w =	20.8	ft^2
PB_w =	41.6	ft^2
PC_w =	21.1	ft^2
Total =	83.5	ft^2

hght chk = 39.00 left
hght chk = 39.00 right

RS Wall = 975.0 ft LS Wall = 465.0 ft

L204br

LOCK AND DAM NO.20, LOCATION 4, TYPE B
1200' LOCK ALTERNATIVE (ROCK FOUNDED)

Subject		Date
L/D 20 Location 4 Quantities for Type B Lock, Crane-In Construction		Sep 96
Computed by Michael Cummings	Checked	Sheet 2 of 7

Typical cell for cofferdam

Area = 1,512.0 ft^2

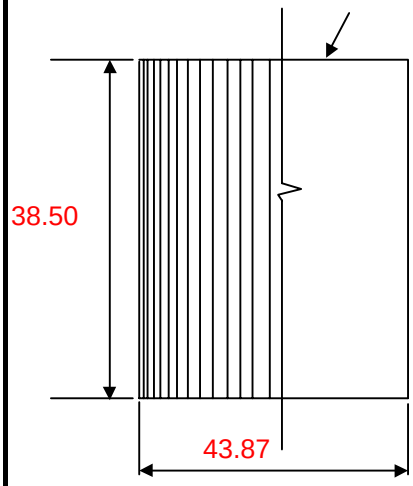

Pile type: PS31
Choose PSA23, PS27.5 or PS31

Area between cells:

Area =	694.0	ft^2
Distance =	14.66	ft
Length =	1.64	ft
Number in cell =	84	piles
No. in space =	19	piles
US Length =	110.0	ft
DS Length =	110.0	ft

Cast In Place Gate Monolith

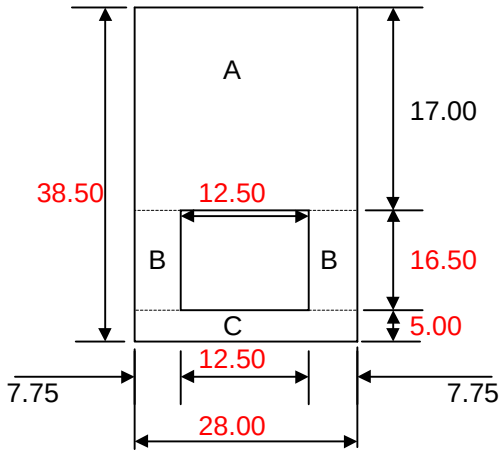

Note: For quantities change the RED values in the cells of the dimensioned cross section shown.

Cast in place concrete

A_g =	476.0	ft^2	
B_g =	255.8	ft^2	
C_g =	140.0	ft^2	
D_g =	206.3	ft^2	CULVERT
Total =	871.8	ft^2	

US lngth = 265.0 ft

hght chk =	38.50	left
hght chk =	38.50	right

L204br

LOCK AND DAM NO.20, LOCATION 4, TYPE B
1200' LOCK ALTERNATIVE (ROCK FOUNDED)

Subject		Date
L/D 20 Location 4 Quantities for Type B Lock, Crane-In Construction		Sep 96
Computed by Michael Cummings	Checked	Sheet 3 of 7

LOCK CHAMBER WALLS:

A. WALL MONOLITHS

1. River side walls

(a) Cast in place concrete

Volume = 26,087.8 CY

(b) Precast concrete

Volume = 3,016.0 CY

1. Land side walls

(a) Cast in place concrete

Volume = 12,441.9 CY

(b) Precast concrete

Volume = 1,438.4 CY

B. GATE MONOLITHS

1. Upstream cast in place concrete

Volume = 17,112.1 CY

2. Upstream precast concrete

Volume = .0 CY

1. Downstream cast in place concrete

Volume = 14,611.7 CY

2. Downstream precast concrete

Volume = 1,531.9 CY

COFFERDAMS:

1. Cofferdam #1, Upstream

Number = 2.0 cells

Total = 412.0 piles

2. Cofferdam #2, Upstream

Number = 2.0 cells

Total = 12,582.0 CY fill volume

SILLS:

Length = 120.0 ft
Width = 111.0 ft
Height = 8.0 ft

Volume = 7,893.3 CY

Subject		Date
L/D 20 Location 4 Quantities for Type B Lock, Crane-In Construcion		Sep 96
Computed by Michael Cummings	Checked	Sheet 4 of 7

SUMMERY:

CONCRETE (Cast in place)

A.	Lockwalls =	38,529.6	CY
B.	Gate monoliths =	31,723.8	CY
C.	Sills =	7,893.3	CY
	Total =	78,200.0	CY

PRECAST CONCRETE

A.	Lockwalls =	4,454.4	CY
B.	Gate monoliths =	1,531.9	CY
	Total =	6,000.0	CY

SHEETPILES

A.	Required number for cofferdams =	412.0	piles
B.	Required number for walls =	0	piles
	Total =	500.0	CY
	Total =	31,600.0	SF of piling

FILL

A.	Required fill for cofferdams =	12,582.0	CY
	Total =	12,600.0	CY

LOCK AND DAM NO.20, LOCATION 4, TYPE B
1200' LOCK ALTERNATIVE (ROCK FOUNDED)

Subject		Date
L/D 20 Location 4 Quantities for Type B Lock, Crane-In Construcion		Sep 96
Computed by Michael Cummings	Checked	Sheet 5 of 7

Upstream Guidewall Cell, Small

(typical)

Area = 700.0 SF

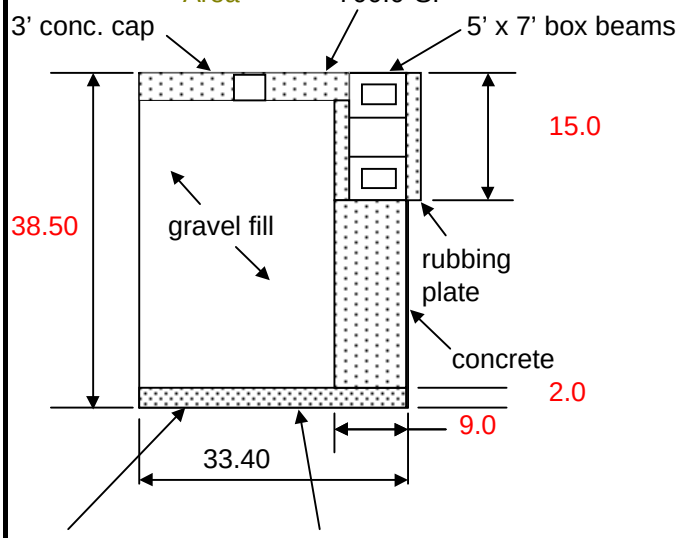

Area = 876.0 SF

Note: For quantities change the RED values in the cells of the dimensioned cross section shown.

Cast-in-Place Concrete			
3' conc. cap	=	77	CY
concrete	=	177	CY
Total	=	254	CY
for 7 cells	=	1,779	CY
Tremie concrete	=	65	CY
for 7 cells	=	455	CY
Precast Concrete			
5'x7' beam	=	889	CY
rubbing pl.	=	500	CY
Total	=	1,389	CY
Gravel fill	=	871	CY
for 7 cells	=	6,097	CY
Sheet Piling	=	4,040	SF
for 7 cells	=	28,278	SF

Upstream Guidewall Cell, Large

(typical)

Area = 2,124.0 SF

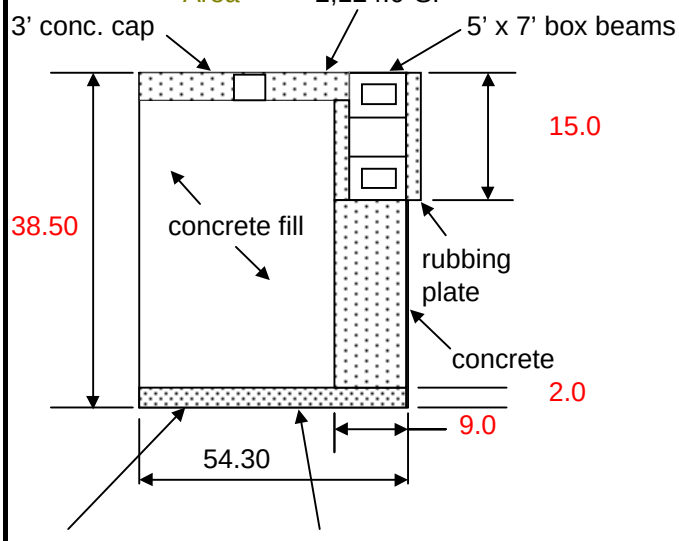

Area = 2,316.0 SF

Note: For quantities change the RED values in the cells of the dimensioned cross section shown.

Cast-in-Place Concrete			
3' conc. cap	=	235	CY
concrete	=	226	CY
Total	=	461	CY
Tremie concrete	=	172	CY
Permanent Cell Fill		2,634	CY
Sheet Piling	=	6,568	SF

LOCK AND DAM NO.20, LOCATION 4, TYPE B
1200' LOCK ALTERNATIVE (ROCK FOUNDED)

Subject		Date
L/D 20 Location 4 Quantities for Type B Lock, Crane-In Construcion		Sep 96
Computed by Michael Cummings	Checked	Sheet 6 of 7

Downstream Guidewall Cell, Small

(typical)

Area = 700.0 SF

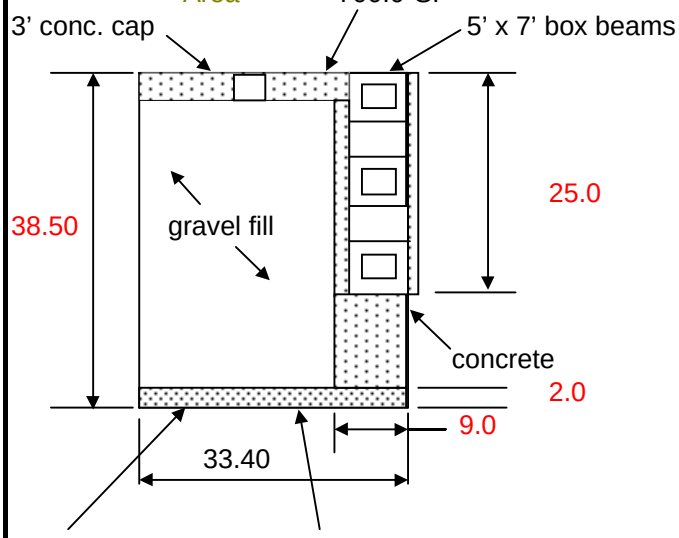

Area = 876.0 SF

Note: For quantities change the RED values in the cells of the dimensioned cross section shown.

Cast-in-Place Concrete			
3' conc. cap	=	77	CY
concrete	=	129	CY
Total	=	206	CY
for 14 cells	=	2,881	CY
Tremie concrete	=	65	CY
for 14 cells	=	910	CY
Precast Concrete			
5'x7' beam	=	2,667	CY
rubbing pl.	=	1,667	CY
Total	=	4,333	CY
Gravel fill	=	871	CY
for 14 cells	=	12,194	CY
Sheet Piling	=	4,040	SF
for 14 cells	=	56,557	SF

Downstream Guidewall Cell, Large

(typical)

Area = 2,124.0 SF

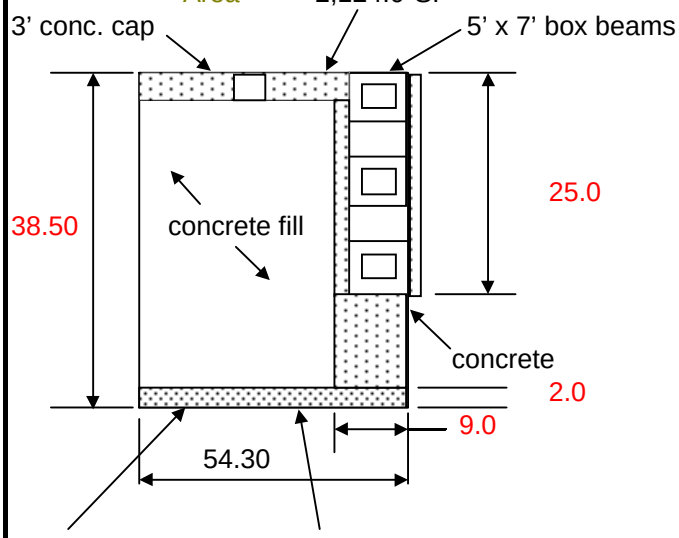

Area = 2,316.0 SF

Note: For quantities change the RED values in the cells of the dimensioned cross section shown.

Cast-in-Place Concrete			
3' conc. cap	=	235	CY
concrete	=	387	CY
Total	=	622	CY
Tremie concrete	=	172	CY
Permanent Cell Fill		2,634	CY
Sheet Piling	=	6,568	SF

Subject		Date
L/D 20 Location 4 Quantities for Type B Lock, Crane-In Construcion		Sep 96
Computed by Michael Cummings	Checked	Sheet 7 of 7

LOCK GUIDEWALLS :

A. UPSTREAM GUIDEWALL

1. Cast-in-place concrete

Volume = 2,239 CY

2. Precast concrete

Volume = 1,389 CY

3. Gravel Fill

Volume = 6,097 CY

4. Sheet Piling

Area = 34,846 SF

5. Permanent Cell Fill

Volume = 2,634 CY

6. Tremie Concrete

Volume = 627 CY

B. DOWNSTREAM GUIDEWALL

1. Cast-in-place concrete

Volume = 3,502 CY

2. Precast concrete

Volume = 4,333 CY

3. Gravel Fill

Volume = 12,194 CY

4. Sheet Piling

Area = 63,124 SF

5. Permanent Cell Fill

Volume = 2,634 CY

6. Tremie Concrete

Volume = 1,082 CY

Guidewall Summary

Total Cast-in-Place Concrete	5,742	CY
Total Precast Concrete	5,722	CY
Total Gravel Fill	18,291	CY
Total Sheet Piling	97,971	SF
Total Permanent Cell Fill	5,268	CY
Total Tremie Concrete	1,709	CY

LOCK AND DAM NO.20, LOCATION 4, TYPE C
1200' LOCK ALTERNATIVE (ROCK FOUNDED)

ACCOUNT CODE	ITEM	QUANTITY	UNIT	UNIT PRICE ($'s)	AMOUNT ($1,000's)
01.	**LANDS AND DAMAGES**				
	REAL ESTATE	1	JOB	SUM	20
04.	**DAMS**				
	DEMOLITION (TAINTER GATE BAY NO.1)	1	JOB	SUM	1,504
	CONCRETE (TIE-IN TO EXISTING LOCK)	362	CY	280.00	101
	MISCELLANEOUS	1	JOB	SUM	150
	REPLACEMENT TAINTER GATE	1	JOB	SUM	10,200
	04 DAMS SUBTOTAL				11,955
05.	**LOCKS**				
	SITEWORK				
	MOBILIZATION	1	JOB	SUM	8,000
	DEMOLITION (AUXILIARY LOCK AREA)	1	JOB	SUM	5,700
	DREDGING	86,500	CY	4.50	389
	ROCK EXCAVATION	50,000	CY	45	2,250
	EXTENSION OF EXISTING UPSTREAM GUIDEWALL	1	JOB	SUM	7,700
	COFFERDAM FILL	167,280	CY	14.50	2,426
	COFFERDAM DEWATERING	1	JOB	SUM	8,000
	CONCRETE				
	CAST IN PLACE REINFORCED CONCRETE	26,400	CY	280	7,392
	GRAVEL FILL	47,600	CY	15.00	714
	METALS				
	SHEET PILING (CLOSURE, PS31)	221,400	SF	25.00	5,535
	STRUCTURAL STEEL (GATES, VALVES, TRASHRACKS)	1	JOB	SUM	3,250
	STRUCTURAL STEEL (MISCELLANEOUS - LADDERS, ETC.)	1	JOB	SUM	2,500
	ELECTRICAL				
	ELECTRICAL SYSTEM	1	JOB	SUM	4,700
	MECHANICAL				
	GATE AND VALVE OPERATING MACHINERY	1	JOB	SUM	2,750
	MECHANICAL SYSTEMS	1	JOB	SUM	3,200
	MISCELLANEOUS	1	JOB	SUM	9,022
	05 LOCKS SUBTOTAL				73,528
05.60.	**GUIDEWALLS**				
	CONCRETE				
	CAST IN PLACE REINFORCED CONCRETE	3,998	CY	280.00	1,119
	PRECAST CONCRETE BEAMS (W/REINFORCEMENT)	8,960	LF	1,170.00	10,483
	TREMIE CONCRETE	1,709	CY	210.00	359
	METALS				
	SHEETPILING FOR CELLS (PS31)	71,251	SF	25.00	1,781
	STRUCTURAL STEEL	1	JOB	SUM	900
	05.60 GUIDEWALLS SUBTOTAL				14,643
09.	**CHANNEL WORK**	1	JOB	SUM	4,133
	PROJECT SUBTOTAL				104,279
	CONTINGENCIES 25%				26,070
	PROJECT SUBTOTAL WITH CONTINGENCIES				130,000
30.	**PLANNING, ENGINEERING, AND DESIGN (10%)**				13,000
31.	**CONSTRUCTION MANAGEMENT (10%)**				13,000
	PROJECT TOTAL				156,000

LOCK AND DAM NO.20, LOCATION 4, TYPE C
1200' LOCK ALTERNATIVE (ROCK FOUNDED)

Subject	ROCK FOUNDED LOCKS: L/D 20 Location 4, Quantities for Type C Lock	Date Sep 96
Computed by Michael Cummings	Checked	Sheet 1 of 6

Crane-In Gate Monolith

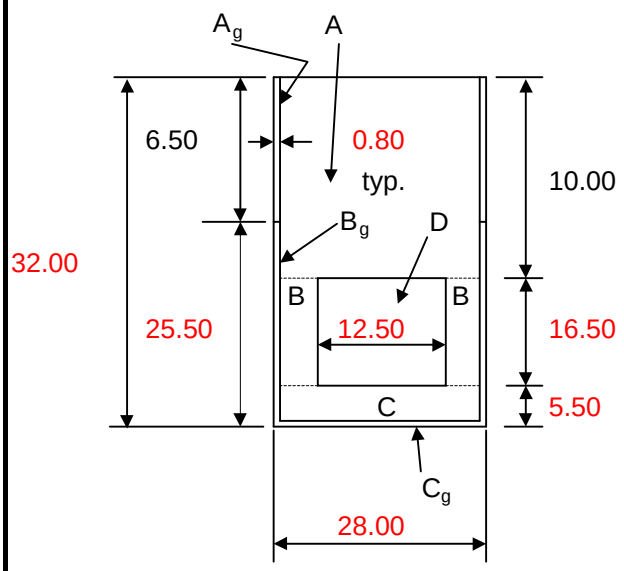

US lngth = .0 DS lngth = 250.0

Note: For quantities change the values in the cells of the dimensioned cross section shown. RED characters can be redimensioned.

AREAS: Cast concrete, one monolith

A =	264.0	ft^2	
B =	229.4	ft^2	
C =	124.1	ft^2	
D =	206.3	ft^2	CULVERT
Total =	617.4	ft^2	

AREAS: Precast concrete, one monolith

A_g =	10.4	ft^2
B_g =	40.8	ft^2
C_g =	21.1	ft^2
Total =	72.3	ft^2

hght chk = 32.00 right side
hght chk = 32.00 left side

Typical sheet pile cell for the lockwall

Area = 661.0 ft^2

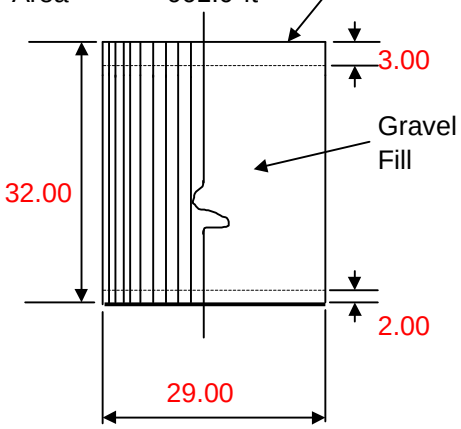

Pile type: PSA23 Choose PSA23, PS27.5, PS31

Area between cells:

Area =	236.0	ft^2
distance =	6.03	ft
Length =	1.33	ft of a single pile
Number in cell =	69	piles
No. in space =	22	piles

LS lngth = 465.0 RS lngth = 975.0

Typical cell of cofferdam

Area = 1,521.0 ft^2

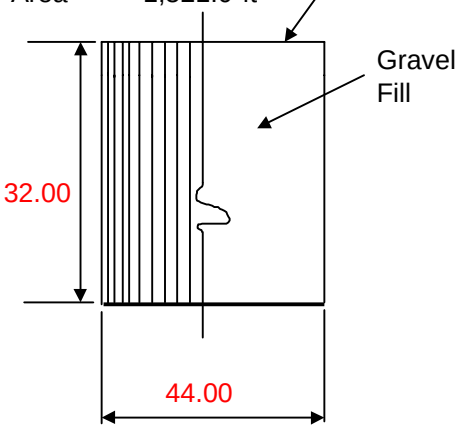

Pile type: PS31 Choose PSA23, PS27.5, PS31

Area between cells:

Area =	694.0	ft^2
distance =	14.66	ft
Length =	1.64	ft of a single pile
Number in cell =	84	piles
No. in space =	38	piles

US lngth = 110.0 DS lngth = 110.0

LOCK AND DAM NO.20, LOCATION 4, TYPE C
1200' LOCK ALTERNATIVE (ROCK FOUNDED)

Subject		Date
L/D 20 Location 4, Quantities for Type C Lock		Sep 96
Computed by Michael Cummings	Checked	Sheet 2 of 6

LOCK CHAMBER WALLS:

A. SHEETPILE CELLS:

1. River side walls:

(a) No. of cells = 28.0
Total = 2,548.0 piles

(b) Volume of Fill required:
Volume = 25,116.0 CY

2. Land side walls:

(a) No. of cells = 14.0
Total = 1,274.0 piles

Volume of Fill required:
Volume = 12,558.0 CY

Total piles = 3,822.0 **Total Fill Volume =** 37,674.0 CY

Lock wall concrete caps and tremie concrete:
Volume = 6,976.7 CY

B. GATE MONOLITHS: Gross estimate of concrete, does not include any machinery spaces

1. Upstream cast in place concrete:
Volume = .0 CY

2. Downstream cast in place concrete:
Volume = 11,433.9 CY

(a). Upstream Pre-cast concrete
Volume = 0 CY

(b). Upstream Pre-cast concrete
Volume = 669.6 CY

COFFERDAMS:

1. Cofferdam: #1, Upstream

Number = 2.0 cells
Total = 488.0 piles

2. Cofferdam: #2, Downstream

Number = 2.0 cells
Total Fill Volume = 9,846.0 CY

PRE-CAST (rubbing surface on intermediate lock wall)

Thickness	2.0 ft	Length	465.0 ft
Height	32.7 ft		

Total = 2252.7 CY

BUMPER SYSTEM:

A. Downstream:
Volume = .0 CY

B. Upstream:
Volume = .0 CY

SILLS:

Length	120.0 ft
Width	111.0 ft
Height	8.0 ft

SILLS:
Volume = 7,893.3 CY

Subject		Date
L/D 20 Location 4, Quantities for Type C Lock		Sep 96
Computed by Michael Cummings	Checked	Sheet 3 of 6

GUIDEWALLS: Information is on another Excel sheet

SUMMARY:

CONCRETE: (Cast in place)

A.	Lockwalls =	6,976.7	CY
B.	Gate monoliths =	11,433.9	CY
C.	Sills =	7,893.3	CY
	Total =	26,400.0	CY

PRE-CAST CONCRETE:

A.	Gate monoliths =	669.6	CY
B.	Precast on intermediate lockwall =	2,252.7	CY
	Total =	3,000.0	CY

SHEETPILES:

A.	Required number for cofferdam =	488.0	piles
B.	Required number for lock walls =	3,822.0	piles
	Total =	4,400.0	piles
	Total =	221,400.0	SF of piling

FILL:

A.	Required for the main lock walls =	37,674.0	CY
B.	Required for the cofferdams =	9,846.0	CY
	Total =	47,600.0	CY

LOCK AND DAM NO.20, LOCATION 4, TYPE C
1200' LOCK ALTERNATIVE (ROCK FOUNDED)

Subject		Date
L/D 20 Location 4 Quantities for Type C Lock, Crane-In Construcion		Sep 96
Computed by Michael Cummings	Checked	Sheet 4 of 6

Upstream Guidewall Cell, Small

(typical)

Area = 700.0 SF

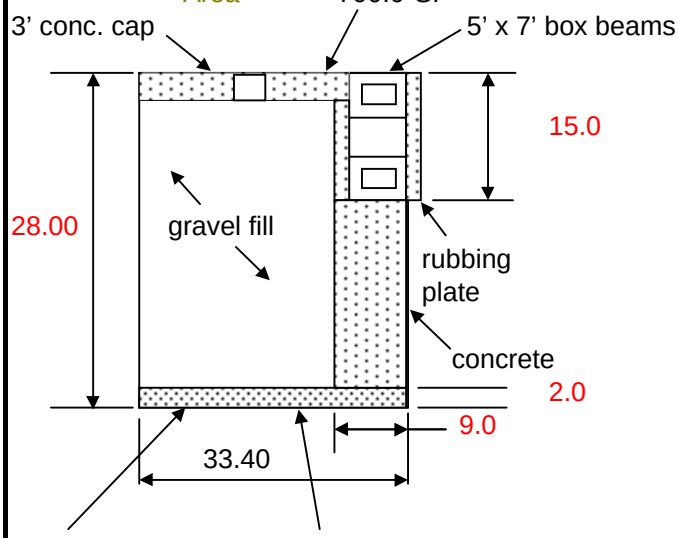

Area = 876.0 SF

Note: For quantities change the RED values in the cells of the dimensioned cross section shown.

Cast-in-Place Concrete

3' conc. cap	=	77	CY
concrete	=	104	CY
Total	=	180	CY
for 7 cells	=	1,262	CY
Tremie concrete	=	65	CY
for 7 cells	=	455	CY
Precast Concrete			
5'x7' beam	=	889	CY
rubbing pl.	=	500	CY
Total	=	1,389	CY
Gravel fill	=	598	CY
for 7 cells	=	4,186	CY
Sheet Piling	=	2,938	SF
for 7 cells	=	20,566	SF

Upstream Guidewall Cell, Large

(typical)

Area = 2,124.0 SF

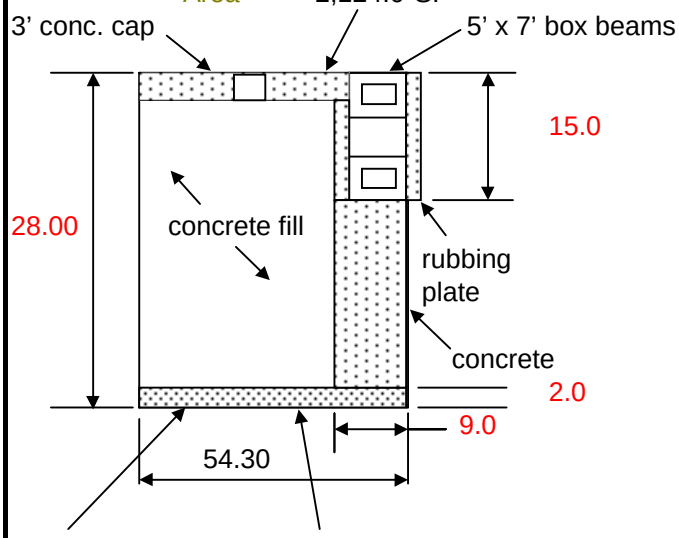

Area = 2,316.0 SF

Note: For quantities change the RED values in the cells of the dimensioned cross section shown.

Cast-in-Place Concrete

3' conc. cap	=	235	CY
concrete	=	128	CY
Total	=	363	CY
Tremie concrete	=	172	CY
Permanent Cell Fill		1,808	CY
Sheet Piling	=	4,776	SF

LOCK AND DAM NO.20, LOCATION 4, TYPE C
1200' LOCK ALTERNATIVE (ROCK FOUNDED)

Subject		Date
L/D 20 Location 4 Quantities for Type C Lock, Crane-In Construcion		Sep 96
Computed by Michael Cummings	Checked	Sheet 5 of 6

Downstream Guidewall Cell, Small

(typical)

Area = 700.0 SF

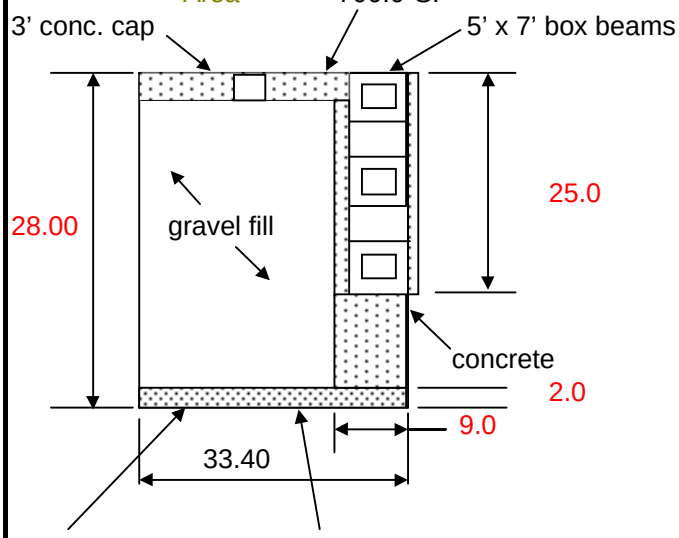

Area = 876.0 SF

Note: For quantities change the RED values in the cells of the dimensioned cross section shown.

Cast-in-Place Concrete			
3' conc. cap	=	77	CY
concrete	=	55	CY
Total	=	132	CY
for 14 cells	=	1,848	CY
Tremie concrete	=	65	CY
for 14 cells	=	910	CY
Precast Concrete			
5'x7' beam	=	2,667	CY
rubbing pl.	=	1,667	CY
Total	=	4,333	CY
Gravel fill	=	598	CY
for 14 cells	=	8,372	CY
Sheet Piling	=	2,938	SF
for 14 cells	=	41,132	SF

Downstream Guidewall Cell, Large

(typical)

Area = 2,124.0 SF

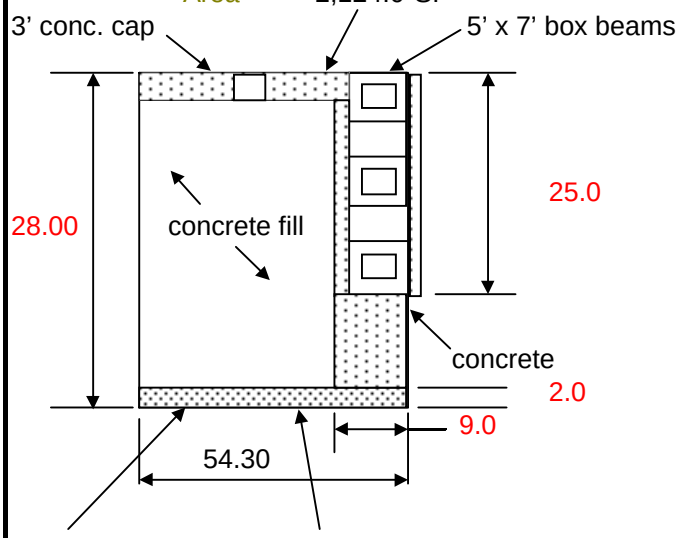

Area = 2,316.0 SF

Note: For quantities change the RED values in the cells of the dimensioned cross section shown.

Cast-in-Place Concrete			
3' conc. cap	=	235	CY
concrete	=	289	CY
Total	=	524	CY
Tremie concrete	=	172	CY
Permanent Cell Fill		1,808	CY
Sheet Piling	=	4,776	SF

LOCK AND DAM NO.20, LOCATION 4, TYPE C
1200' LOCK ALTERNATIVE (ROCK FOUNDED)

Subject		Date
L/D 20 Location 4 Quantities for Type C Lock, Crane-In Construcion		Sep 96
Computed by Michael Cummings	Checked	Sheet 6 of 6

LOCK GUIDEWALLS :

A. UPSTREAM GUIDEWALL

1. Cast-in-place concrete

Volume = 1,626 CY

2. Precast concrete

Volume = 1,389 CY

3. Gravel Fill

Volume = 4,186 CY

4. Sheet Piling

Area = 25,343 SF

5. Permanent Cell Fill

Volume = 1,808 CY

6. Tremie Concrete

Volume = 627 CY

B. DOWNSTREAM GUIDEWALL

1. Cast-in-place concrete

Volume = 2,372 CY

2. Precast concrete

Volume = 4,333 CY

3. Gravel Fill

Volume = 8,372 CY

4. Sheet Piling

Area = 45,909 SF

5. Permanent Cell Fill

Volume = 1,808 CY

6. Tremie Concrete

Volume = 1,082 CY

Guidewall Summary

Total Cast-in-Place Concrete	3,998	CY
Total Precast Concrete	5,722	CY
Total Gravel Fill	12,558	CY
Total Sheet Piling	71,251	SF
Total Permanent Cell Fill	3,617	CY
Total Tremie Concrete	1,709	CY

Location 3, Type B, Rock

ACCOUNT CODE	ITEM L/D 19	QUANTITY	UNIT	NIT PRICE ($'s)	AMOUNT ($1,000's)
01.	LANDS AND DAMAGES				
	REAL ESTATE	1	JOB	SUM	30
04.	DAMS	1	JOB	SUM	0
05.	LOCKS				
	SITEWORK				
	MOBILIZATION	1	JOB	SUM	10,000
	CONCRETE DEMOLITION OLD LOCKWALL & DRYDOCK	47,000	CY	400.00	18,800
	STONE & EARTH FILL REMOVAL, OLD DRYDOCK	108,000	CY	20.00	2,160
	OTHER DEMOLITION (UPSTREAM CLOSURE DAM, GATES ...)	1	JOB	SUM	4,000
	MODIFIY EXISTING F/E SYSTEM	1	JOB	SUM	3,000
	DREDGING	0	CY	4.50	0
	ROCK EXCAVATION (FOR CHAMBER)	109,000	CY	45.00	4,905
	COFFERDAM FILL (DOWNSTREAM CLOSURE)	24,900	CY	14.50	361
	NEW LOCK DEWATERING	1	JOB	SUM	500
	CONCRETE				
	CAST IN PLACE REINFORCED CONCRETE	187,000	CY	280.00	52,360
	PRECAST CONCRETE (W/REINFORCEMENT)	30,600	CY	400.00	12,240
	SET LANDING PADS & WALL UNITS	1	JOB	SUM	3,070
	TREMIE CONCRETE (WITH REINFORCEMENT)	13,200	CY	210.00	2,772
	METALS				
	SHEETPILING (DOWNSTREAM CLOSURE, PSA23)	70,700	SF	30.00	2,121
	STRUCTURAL STEEL (GATES, VALVES, TRASHRACKS,	1	JOB	SUM	8,000
	STRUCTURAL STEEL (MISCELLANEOUS - LADDERS, ET	1	JOB	SUM	6,000
	ELECTRICAL				
	ELECTRICAL SYSTEM	1	JOB	SUM	5,000
	MECHANICAL				
	GATE AND VALVE OPERATING MACHINERY	1	JOB	SUM	2,500
	MECHANICAL SYSTEMS	1	JOB	SUM	3,000
	MISCELLANEOUS	1	JOB	SUM	14,100
	05 LOCKS SUBTOTAL				154,889
05.60.	GUIDEWALLS				
	CONCRETE				
	CAST IN PLACE REINFORCED CONCRETE	6,930	CY	280.00	1,940
	PRECAST CONCRETE BEAMS (PRESTRESSED)	6,000	LF	1,170.00	7,020
	PRECAST CONCRETE (W/REINFORCEMENT)	3,290	CY	400.00	1,316
	TREMIE CONCRETE (WITH REINFORCEMENT)	5,100	CY	210.00	1,071
	GRAVEL FILL	82,900	CY	15.00	1,244
	METALS				
	SHEETPILING FOR CELLS (PS31)	180,000	SF	25.00	4,500
	SHEETPILE CUTOFF WALL (PZ35)	32,800	SF	30.00	984
	STRUCTURAL STEEL	1	JOB	SUM	3,811
	05.60 GUIDEWALLS SUBTOTAL				21,886
09.	CHANNEL WORK	1	JOB	SUM	4,100
	PROJECT SUBTOTAL				180,905
	CONTINGENCIES (25%)				45,226
	PROJECT SUBTOTAL WITH CONTINGENCIES				226,131
30.	PLANNING, ENGINEERING, AND DESIGN (10%)				23,000
31.	CONSTRUCTION MANAGEMENT (10%)				23,000
	PROJECT TOTAL				272,131

TOTAL BASIC LOCK COST (O4., 05., 05.60.) WITH CONTINGENCIES, PED, & CM* **$ 272,000**

*(EXCLUDES REAL ESTATE, RELOCATION, AND CHANNEL WORK WHICH ARE MORE SITE-SPECIFIC.)

LOCK AND DAM NO. 18, LOCATION 2, TYPE B
(PILE-FOUNDED)

CCOUNT CODE	ITEM	QUANTITY	UNIT	UNIT PRICE ($'s)	AMOUNT ($1,000's)
01.	**LANDS AND DAMAGES**				
	REAL ESTATE	1	JOB	SUM	30
04.	**DAMS**				
	04 DAMS SUBTOTAL				0
05.	**LOCKS**				
	SITEWORK				
	MOBILIZATION	1	JOB	SUM	10,650
	DEMOLITION	1	JOB	SUM	1,910
	EXCAVATION	27,090	CY	4.5	122
	BACKFILL	22,000	CY	6.25	138
	WALL FILL	8,156	CY	10.00	82
	SCOUR PROTECTION	429	TN	20.00	9
	SCOUR STONE IN LOCK FLOOR	9,030	TN	25.00	226
	FOUNDATION/LOCK DEWATERING	1	JOB	SUM	3,000
	MARINE FACILITIES, TEMP. MOORING STR.	1	JOB	SUM	3,900
	CONCRETE				
	UNDERBASE GROUTING	5,297	CY	200	1,059
	CAST IN PLACE REINFORCED CONCRETE	36,138	CY	217	7,842
	PRECAST CONCRETE	8,816	CY	400	3,526
	TREMIE CONCRETE	5,651	CY	165	932
	POST TENSION STEEL	135,000	LB	2.5	338
	FURNISH AND SET LANDING PADS	74	EA	19000	1,406
	SET PRECAST WALL UNITS	28	EA	16000	448
	FLOAT IN AND SET FLOOR UNITS	26	EA	16000	416
	FLOAT IN AND SET MITER GATE SILL	1	JOB	SUM	140
	STEEL REINFORCEMENT	2,168,300	LB	0.75	1,626
	METALS				
	SHEET PILING	41,592	SF	21.52	895
	WALL UNIT BRACING	1	JOB	SUM	250
	FOUNDATION PILING AND TESTING	1	JOB	SUM	5,300
	STRUCTURAL STEEL (GATES, VALVES, TRASHRACKS, BU	1	JOB	SUM	11,613
	STRUCTURAL STEEL (MISCELLANEOUS - LADDERS, ETC.	1	JOB	SUM	3,040
	ELECTRICAL				
	ELECTRICAL SYSTEM	1	JOB	SUM	4,700
	INSTRUMENTATION	1	JOB	SUM	1,250
	MECHANICAL				
	GATE AND VALVE OPERATING MACHINERY	1	JOB	SUM	2,750
	MECHANICAL SYSTEMS	1	JOB	SUM	3,200
	MISCELLANEOUS	1	JOB	SUM	1,950
	05 LOCKS SUBTOTAL				72,717
05.60.	**GUIDEWALLS**				
	SITEWORK				
	EXCAVATION	118,490	CY	4.5	533
	BACKFILL	73,640	CY	10	736
	SCOUR PROTECTION	18,900	TON	15	284
	CONCRETE				
	42" DIAMETER PILES	2,667	LF	400	1,067
	CAST IN PLACE REINFORCED CONCRETE	1,570	CY	150	236
	PRECAST BEAMS	10,900	CY	500	5,450
	PRECAST BEAM SEATS	165	CY	1000	165
	TREMIE CONCRETE	130	CY	500	65
	PERMANENT CELL FILL (C0NCRETE)	14,292	CY	200	2,858
	GROUT FOR BEAMS	490	CY	1000	490
	STEEL REINFORCEMENT	1,840,000	LB	0.75	1,380
	GRAVEL FILL	28,107	CY	10	281
	METALS				
	SHEET PILING FOR CELLS (PS31)	179,210	SF	25.00	4,480
	SHEET PILING FOR CUTOFF WALL (PZ35)	72,033	SF	30.00	2,161
	FOUNDATION PILING		JOB	SUM	318
	POST TENSIONING	1,280	LF	30	38
	STRUCTURAL STEEL	1	JOB	SUM	4,060
	05.60 GUIDEWALLS SUBTOTAL				24,603
09.	**CHANNEL WORK**	1	JOB	SUM	200
	PROJECT SUBTOTAL				97,550
	CONTINGENCIES 25%				24,387
	PROJECT SUBTOTAL WITH CONTINGENCIES				122,000
30.	**PLANNING, ENGINEERING, AND DESIGN (10%)**				12,000
31.	**CONSTRUCTION MANAGEMENT (10%)**				12,000
	PROJECT TOTAL				$ 146,000

		QUANTITY CALCULATIONS									
	L/D 18 Location 2, Type B, Pile Founded							Sheet 1_ of 3____			
1	Remove existing sill down to										
	elev. 405.33	25	x	2	x	110	=	5,500.00	CF	203.70	CY
2	Remove existing 2' thick slab	95.25	x	2	x	110	=	20,955.00	CF	776.11	CY
3	Demolish existing guidewall, to										
	include timber crib and pile	502	x	30	x	53	=	798,180.00	CF	29,562.22	CY
4	Install sheet piling, PZ27	30.9	x	673	x	2	=	41,591.40	SF		
5	Excavation	6.3	x	172		675	=	731,430.00	CF	27,090.00	CY
6	Place scour stone	1.5	x	172	x	675	=	174,150.00	CF	6,450.00	CY
7	Place scour protection (riprap)	3	x	25	x	110	=	8,250.00	CF	305.56	CY
8	Install piling, HP 14 x 89										
	(54 ea per monolith @ 50' long										
	for 28 monoliths)	54	x	50	x	28	=	75,600.00	LF		
	Lockwall/floor connection										
9	HP14 x 117 stud w/welded ribs	23	x	2	=	46	EA				
	thixotropic grout @ HP studs	23.5	x	46	=	1,081.00	CF				
	thixotropic grout @ joints per ft	0.25	x	5	x	1296	=	1,620.00	CF		
10	Grout under base filling	2	x	650	x	110	=	143,000.00	CF	5,296.30	CY
11	Install piling, HP 14 x 89										
	(5 ea per floor unit @ 45' long										
	for 26 floor units	5	x	45	x	26	=	5,850.00	LF		
							=	26	EA		
12	Sand infill of floor units, large	((9.25' x 6.25' x2)+(19.75' x 6.25' x 4))x 510'					=	310,794.00	CF		
	" " " " " , small	((9.25' x 3' x 2)+(19.75' x 3' x 4)) x 66					=	19,305.00	CF		
								330,099.00	CF	12,225.89	CY
13	Concrete										
	riverward wall										
	-bottom lift (tremie)	5.5	x	23	x	603	=	76,279.50	CF		
	-2nd lift (reinforced)	4	x	28	x	603	=	67,536.00	CF		
	-3rd lift (reinforced)inside	13.5	x	7.75	x	603	=	63,088.88	CF		
	- " " " outside	13.5	x	7.75	x	603	=	63,088.88	CF		
	-4th lift (reinforced)	8.5	x	26	x	603	=	133,263.00	CF		
	-5th lift (reinforced)	4.0	x	28	x	603	=	67,536.00	CF		
	-6th lift (reinforced)outside	5.60	x	9	x	603	=	30,391.20	CF		
	- " " " inside	5.60	x	9	x	603	=	30,391.20	CF		
	-7th lift (reinforced)outside	6.0	x	9	x	603	=	32,562.00	CF		
								564,136.65		20,893.95	CY
14	Concrete										
	landward wall										
	-bottom lift (tremie)	5.5	x	23	x	603	=	76,279.50	CF		
	-2nd lift (reinforced)	4	x	28	x	603	=	67,536.00	CF		
	-3rd lift (reinforced)inside	13.5	x	7.75	x	603	=	63,088.88	CF		
	- " " " outside	13.5	x	7.75	x	603	=	63,088.88	CF		
	-4th lift (reinforced)	8.5	x	26	x	603	=	133,263.00	CF		
	-5th lift (reinforced)	4.0	x	28	x	603	=	67,536.00	CF		
	-6th lift (reinforced)outside	5.60	x	9	x	603	=	30,391.20	CF		
	- " " " inside	5.60	x	9	x	603	=	30,391.20	CF		
	-7th lift (reinforced)outside	6.0	x	9	x	603	=	32,562.00	CF		
								564,136.65		20,893.95	CY
	Total Concrete									41,787.90	CY
											Ld182bpf

LOCK AND DAM NO. 18, LOCATION 2, TYPE C
(PILE-FOUNDED)

CCOUNT CODE	ITEM	QUANTITY	UNIT	UNIT PRICE ($'s)	AMOUNT ($1,000's)
01.	**LANDS AND DAMAGES**				
	REAL ESTATE	1	JOB	SUM	30
02.	**RELOCATIONS**	1	JOB	SUM	2,000
04.	**DAMS**				
	04 DAMS SUBTOTAL				0
05.	**LOCKS**				
	SITEWORK				
	MOBILIZATION	1	JOB	SUM	10,650
	DEMOLITION	1	JOB	SUM	1,910
	EXCAVATION	11,074	CY	4.5	50
	BACKFILL	19,700	CY	10.00	197
	SCOUR PROTECTION	2,000	TN	15.00	30
	SCOUR STONE IN LOCK FLOOR	16,860	TN	15.00	253
	GRAVEL FILTER IN LOCK FLOOR	16,090	TN	20.00	322
	FOUNDATION/LOCK DEWATERING	1	JOB	SUM	3,000
	MARINE FACILITIES, TEMP. MOORING STR.	1	JOB	SUM	3,900
	CONCRETE				
	STRUCTURAL GROUTING	700	CY	200	140
	CAST IN PLACE REINFORCED CONCRETE	30,354	CY	217	6,587
	CAST IN PLACE CONNECTIONS	200	CY	725	145
	PRECAST CONCRETE	10,020	CY	400	4,008
	TREMIE CONCRETE, BASE .	3,574	CY	165	590
	PRECAST FLOOR PANELS	8,210	CY	286	2,348
	POST TENSION STEEL	185,300	LB	2.5	463
	FURNISH AND SET LANDING PADS	74	EA	19000	1,406
	SET PRECAST WALL UNITS	28	EA	16000	448
	FLOAT IN AND SET MITER GATE SILL	1	JOB	SUM	140
	STEEL REINFORCEMENT	1,822,000	LB	0.75	1,367
	METALS				
	SHEET PILING	47,110	SF	21.52	1,014
	WALL UNIT BRACING	1	JOB	SUM	250
	FOUNDATION PILING AND TESTING	1	JOB	SUM	3,487
	STRUCTURAL STEEL (GATES, VALVES, TRASHRACKS, B	1	JOB	SUM	11,613
	STRUCTURAL STEEL (MISCELLANEOUS - LADDERS, ET	1	JOB	SUM	3,040
	ELECTRICAL				
	ELECTRICAL SYSTEM	1	JOB	SUM	4,700
	INSTRUMENTATION	1	JOB	SUM	1,250
	MECHANICAL				
	GATE AND VALVE OPERATING MACHINERY	1	JOB	SUM	2,750
	MECHANICAL SYSTEMS	1	JOB	SUM	3,200
	MISCELLANEOUS	1	JOB	SUM	1,950
	05 LOCKS SUBTOTAL				71,207
05.60.	**GUIDEWALLS**				
	SITEWORK				
	EXCAVATION	118,490	CY	4.5	533
	BACKFILL	73,640	CY	10	736
	SCOUR PROTECTION	18,900	TON	15	284
	CONCRETE				
	42" DIAMETER PILES	2,667	LF	400	1,067
	CAST IN PLACE REINFORCED CONCRETE	1,570	CY	150	236
	PRECAST BEAMS	10,900	CY	500	5,450
	PRECAST BEAM SEATS	165	CY	1000	165
	TREMIE CONCRETE	130	CY	500	65
	PERMANENT CELL FILL (C0NCRETE)	13,989	CY	200	2,798
	GROUT FOR BEAMS	490	CY	1000	490
	STEEL REINFORCEMENT	1,840,000	LB	0.75	1,380
	GRAVEL FILL	27,496	CY	10	275
	METALS				
	SHEET PILING FOR CELLS (PS31)	177,876	SF	25.00	4,447
	SHEET PILE CUTOFF WALL (PZ35)	71,496	SF	30.00	2,145
	FOUNDATION PILING	1	JOB	SUM	318
	POST TENSIONING	1,280	LF	30	38
	STRUCTURAL STEEL	1	JOB	SUM	4,060
	05.60 GUIDEWALLS SUBTOTAL				24,486
09.	**CHANNEL WORK**	1	JOB	SUM	200
	PROJECT SUBTOTAL				97,923
	CONTINGENCIES 25%				24,481
	PROJECT SUBTOTAL WITH CONTINGENCIES				122,000
30.	**PLANNING, ENGINEERING, AND DESIGN (10%)**				12,000
31.	**CONSTRUCTION MANAGEMENT (10%)**				12,000
	PROJECT TOTAL				$ 146,000

		QUANTITY CALCULATIONS									
	L/D 18, Location 2, Type C, Pile Founded							Sheet 1_ of	3_		
1	Remove existing sill down to										
	elev. 577.83	25	x	2	x	110	=	5,500.00	CF	203.70	CY
2	Remove existing 2' thick slab	95.25	x	2	x	110	=	20,955.00	CF	776.11	CY
3	Demolish existing guidewall, to	502	x	30	x	53	=	798,180.00	CF	29,562.22	CY
	include timber crib and pile										
4	Install sheet piling, PZ27	35	x	673	x	2	=	47,110.00	SF		
5	Place scour stone (under walls)	1.5	x	60	x	600	=	54,000.00	CF	2,000.00	CY
6	Excavation	4.5	x	110	x	604	=	298,980.00	CF	11,073.33	CY
7	Install piling, HP 14 x 89										
	(24 ea per monolith @50' long										
	for 28 monoliths)	24	x	50	x	28	=	33,600.00	LF		
8	Steel footing box(1/2"steel plate)										
	riverward wall										
	20.42 lb x [(6'x3'x2)+(4'x3'x2)]=1,225 LB @ 30 locations							36,750.00	LB		
	landward wall										
	20.42 lb x [(6'x3'x2)+(4'x3'x2)]=1,225 LB @ 30 location							36,750.00	LB		
								73,500.00	LB		
9	Install piling, HP 14 x 89								or	2,722.22	TN
	for chamber floor paving blocks										
	(7 ea per joint @ 50' for 14 ea										
	joints)	50	x	7	x	14	=	4,900.00	LF		
10	Scour stone, (removed prior to										
	floor construction)	3	x	110	x	580	=	191,400.00	CF	7,088.89	CY
11	Filter layer	2	x	110	x	580	=	127,600.00	CF	4,725.93	CY
12	Filter gravel	2	x	110	x	580	=	127,600.00	CF	4,725.93	CY
13	Paving blocks (3'x30'x14')										
	1,260cf @ 8/row x 18 rows	1,260	x	8	x	18	=	181,440.00	CF	6,720.00	CY
14	Structural steel (per cell unit)										
	- W18 x 86 waler	86	x	154	=	13,244.00					
	- W18 x 86 brace	86	x	22	=	1,892.00					
	- C12 x 25 diagonal brace	25	x	232	=	5,800.00					
	(There are 30 cell units, 15 in each wall)					20,936.00	x	30	=	628,080.00	LB
									or	314.04	TN
15	Precast liner										
	riverward wall	24.1	x	603	x	1	=	14,532.30	CF		
	landward wall	24.1	x	603	x	1	=	14,532.30	CF		
								29,064.60	CF		
									or	1,076.47	CY
16	Precast concrete miter gate sill										
	and wall monoliths										
	Taken from quantity calc's from St. Paul District's Microstation analysis										
						- Slab volume			=	1,434.50	CY
						- Wall volume			=	771.32	CY
						- Concrete strut volume			=	17.25	CY
	Total Precast Concrete Volume for Miter Gate Sill & Wall Monoliths								=	2,223.07	CY
											Ld18cpf

LOCK AND DAM NO. 18, LOCATION 3, TYPE B
1200' LOCK ALTERNATIVE (ROCK FOUNDED)

ACCOUNT CODE	ITEM	QUANTITY	UNIT	UNIT PRICE ($'s)	AMOUNT ($1,000's)
01.	**LANDS AND DAMAGES**				
	REAL ESTATE	1	JOB	SUM	30
04.	**DAMS**				
	REMOVAL OF EXISTING STRUCTURES	1	JOB	SUM	150
	04 DAMS SUBTOTAL				150
05.	**LOCKS**				
	SITEWORK				
	MOBILIZATION	1	JOB	SUM	10,650
	DEMOLITION	1	JOB	SUM	1,910
	EXCAVATION	48,960	CY	6.25	306
	FOUNDATION FILL AT SCOUR HOLE	0	CY	18.75	0
	WALL FILL	15,760	CY	10.00	158
	CAPSTONE	52,660	TN	25.00	1,317
	RIPRAP	33,380	TN	20.00	668
	LEVELING STONE IN LOCK FLOOR	4,580	TN	15.00	69
	GRAVEL FILTER IN LOCK FLOOR	16,606	TN	15.00	249
	GEOTEXTILE	13,740	SY	6.00	82
	FOUNDATION/LOCK DEWATERING	1	JOB	SUM	3,000
	MARINE FACILITIES, TEMP. MOORING STR.	1	JOB	SUM	3,900
	CONCRETE				
	STRUCTURAL GROUTING	450	CY	200	90
	CAST IN PLACE REINFORCED CONCRETE	61,500	CY	217	13,346
	CAST IN PLACE CONNECTIONS	964	CY	725	699
	PRECAST CONCRETE	9,500	CY	400	3,800
	TREMIE CONCRETE, BASE .	10,340	CY	165	1,706
	PRECAST FLOOR PAVERS AND STRUTS	15,450	CY	286	4,419
	SET PRECAST FLOOR BEAMS	31	EA	16000	496
	SET FLOOR PANELS	62	EA	10000	620
	STEEL REINFORCEMENT	7,614,000	LB	0.75	5,711
	METALS				
	SHEET PILING	32,000	SF	35.80	1,146
	SHEET PILE BRACING	1	JOB	SUM	350
	FOUNDATION PILING AND TESTING	209,190	LF	39.75	8,315
	STRUCTURAL STEEL (GATES, VALVES, ETC.)	1	JOB	SUM	11,613
	STRUCTURAL STEEL (MISCELLANEOUS - LADDERS, ETC.)	1	JOB	SUM	3,040
	ELECTRICAL				
	ELECTRICAL SYSTEM		JOB	SUM	4,700
	INSTRUMENTATION	1	JOB	SUM	1,250
	MECHANICAL				
	GATE AND VALVE OPERATING MACHINERY	1	JOB	SUM	2,750
	MECHANICAL SYSTEMS	1	JOB	SUM	3,200
	MISCELLANEOUS	1	JOB	SUM	1,950
	05 LOCKS SUBTOTAL				91,508

LOCK AND DAM NO. 18, LOCATION 3, TYPE B
1200' LOCK ALTERNATIVE (ROCK FOUNDED)

05.60.	GUIDEWALLS				
	SITEWORK				
	EXCAVATION	118,490	CY	4.5	533
	BACKFILL	73,640	CY	10	736
	SCOUR PROTECTION	46,350	TON	15	695
	CONCRETE				
	42" DIAMETER PILES	6,360	LF	400	2,544
	CAST IN PLACE REINFORCED CONCRETE	6,257	CY	150	938
	PRECAST BEAMS	17,325	CY	500	8,663
	PRECAST BEAM SEATS	262	CY	1000	262
	TREMIE CONCRETE	1,709	CY	500	855
	PERMANENT CELL FILL (C0NCRETE)	5,756	CY	200	1,151
	GROUT FOR BEAMS	778	CY	1000	778
	STEEL REINFORCEMENT	2,921,700	LB	0.75	2,191
	GRAVEL FILL	19,984	CY	10	200
	METALS				
	SHEET PILING	105,859	SF	25.00	2,646
	FOUNDATION PILING	1	JOB	SUM	318
	POST TENSIONING	2,030	LF	30	61
	STRUCTURAL STEEL	1	JOB	SUM	4,060
	05.60 GUIDEWALLS SUBTOTAL				26,632
09.	CHANNEL WORK	1	JOB	SUM	200
	PROJECT SUBTOTAL				118,520
	CONTINGENCIES 25%				29,630
	PROJECT SUBTOTAL WITH CONTINGENCIES				148,150
30.	PLANNING, ENGINEERING, AND DESIGN (10%)				15,000
31.	CONSTRUCTION MANAGEMENT (10%)				15,000
	PROJECT TOTAL				$ 178,000

Subject	ROCK FOUNDED LOCKS: L/D 18 Location 3 Quantities for Type B Lock, Crane-In Construction	Date SEP 96
Computed by Michael Cummings	Checked	Sheet 1 of 6

Crane - In Gate Monolith

Note: For quantities change the Red values in the cells of the dimensioned cross section shown.

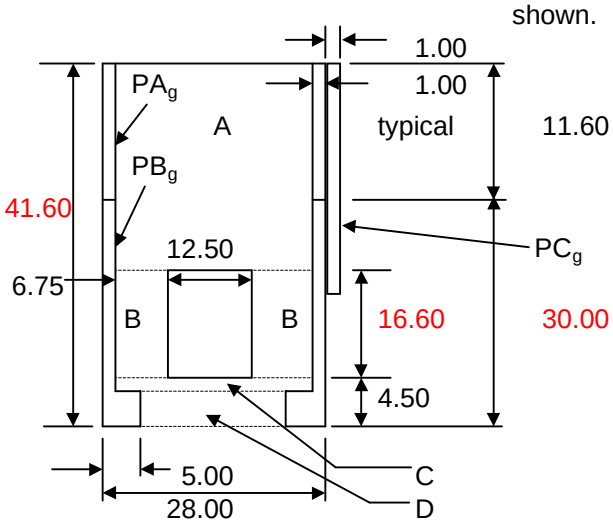

Cast in place concrete

A_g =	533.0	SF	
B_g =	224.1	SF	
C_g =	26.0	SF	
D_g =	63.0	SF	CULVERT
Total =	846.1	SF	

Pre-cast concrete

PA_g =	23.2	SF
PB_g =	88.0	SF
PC_g =	18.5	SF
Total =	129.7	SF

hght chk = 41.60 left
hght chk = 41.60 right

US lngth = .0 ft DS lngth = 250.0 ft

Crane - in Lock Wall

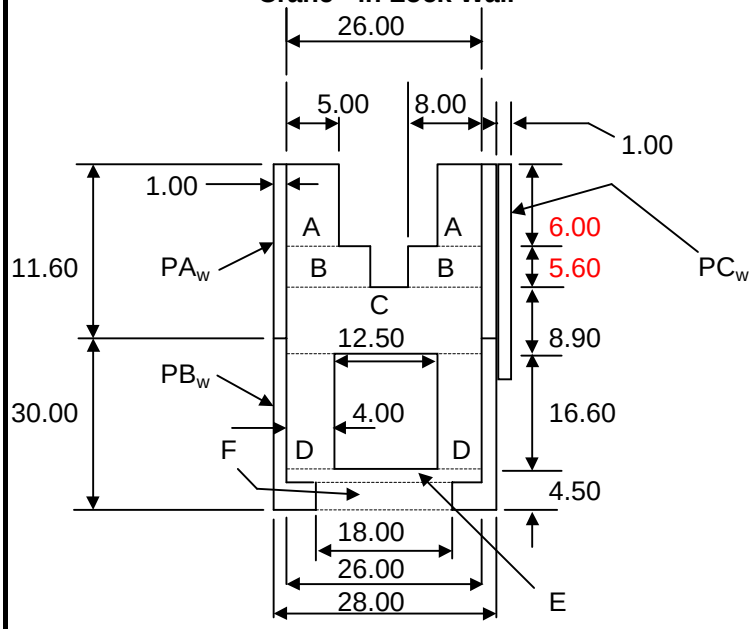

Cast in place concrete

A_w =	60.00	SF	
B_w =	89.60	SF	
C_w =	231.40	SF	
D_w =	224.10	SF	
E_w =	26.00	SF	CULVERT
F_w =	63.00	SF	
Total =	694.10	SF	

Pre-cast concrete

PA_w =	23.2	SF
PB_w =	88.0	SF
PC_w =	18.5	SF
Total =	129.7	SF

hght chk = 41.60 left
hght chk = 41.60 right

RS Wall = 958.0 ft LS Wall = 515.0 ft

Ld183bp

Subject		Date
L/D 18 Location 3 Quantities for Type B Lock, Crane-In Construction		SEP 96
Computed by Michael Cummings	Checked	Sheet 2 of 6

Typical cell for cofferdam

Area = 1,963.0 ft^2

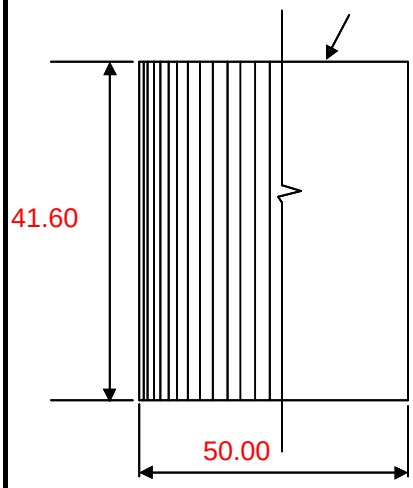

Pile type: ps31
Choose PSA23, PS27.5, or PS31

Area between cells:

Area =	855.0	ft^2
Distance =	15.91	ft
Length =	1.64	ft
Number in cell =	96	piles
No. in space =	21	piles
US Length =	110.0	ft
DS Length =	110.0	ft

LOCK CHAMBER WALLS:

A. WALL MONOLITHS

1. River side walls

(a) Cast in place concrete

Volume = 24,627.7 CY

(b) Precast concrete

Volume = 4,601.9 CY

1. Land side walls

(a) Cast in place concrete

Volume = 13,239.3 CY

(b) Precast concrete

Volume = 2,473.9 CY

B. GATE MONOLITHS

1. Upstream cast in place concrete

Volume = .0 CY

2. Upstream precast concrete

Volume = .0 CY

1. Downstream cast in place concrete

Volume = 15,668.5 CY

2. Downstream precast concrete

Volume = 2,401.9 CY

Subject		Date
L/D 18 Location 3 Quantities for Type B Lock, Crane-In Construcion		SEP 96
Computed by Michael Cummings	Checked	Sheet 3 of 6

COFFERDAMS:

1. Cofferdam #1, Upstream

Number = 2.0 cells

Total = 468.0 piles

2. Cofferdam #2, Downstream

Number = 2.0 cells

Total = 17,367.0 CY fill volume

SILLS:

Length = 120.0 ft
Width = 111.0 ft
Height = 8.0 ft

Volume = 7,893.3 CY

SUMMARY:

CONCRETE (Cast in place)

A.	Lockwalls =	37,867.0 CY
B.	Gate monoliths =	15,668.5 CY
C.	Sills =	7,893.3 CY
	Total =	61,500.0 CY

PRECAST CONCRETE

A.	Lockwalls =	7,075.9 CY
B.	Gate monoliths =	2,401.9 CY
	Total =	9,500.0 CY

SHEETPILES

A.	Required number for cofferdams =	468.0 piles
	Total =	500.0 CY
	Total =	32,000.0 SF of piling

FILL

A.	Required fill for cofferdams =	17,367.0 CY
	Total =	17,400.0 CY

Subject		Date
L/D 18 Location 3 Quantities for Type B Lock, Crane-In Construcion		SEP 96
Computed by Michael Cummings	Checked	Sheet 4 of 6

Upstream Guidewall Cell, Small

(typical)

Area = 700.0 SF

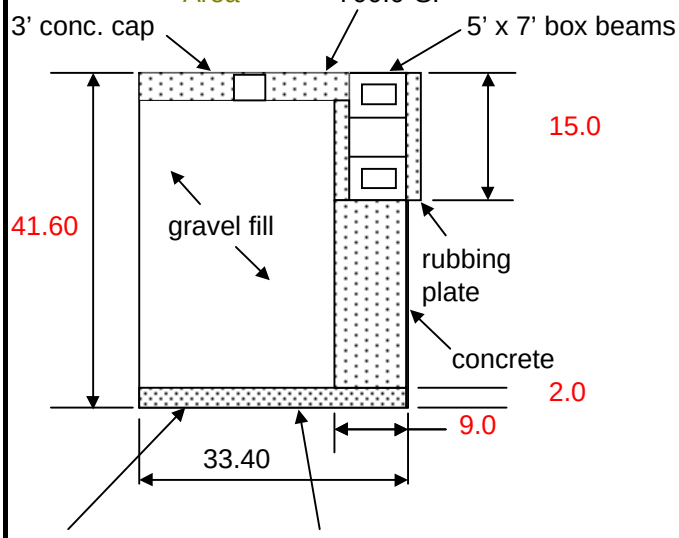

Area = 876.0 SF

Note: For quantities change the RED values in the cells of the dimensioned cross section shown.

Cast-in-Place Concrete

3' conc. cap	=	77	CY
concrete	=	199	CY
Total	=	276	CY
for 7 cells	=	1,931	CY
Tremie concrete	=	65	CY
for 7 cells	=	455	CY

Precast Concrete

5'x7' beam	=	889	CY
rubbing pl.	=	500	CY
Total	=	1,389	CY
Gravel fill	=	952	CY
for 7 cells	=	6,661	CY
Sheet Piling	=	4,365	SF
for 7 cells	=	30,555	SF

Upstream Guidewall Cell, Large

(typical)

Area = 2,124.0 SF

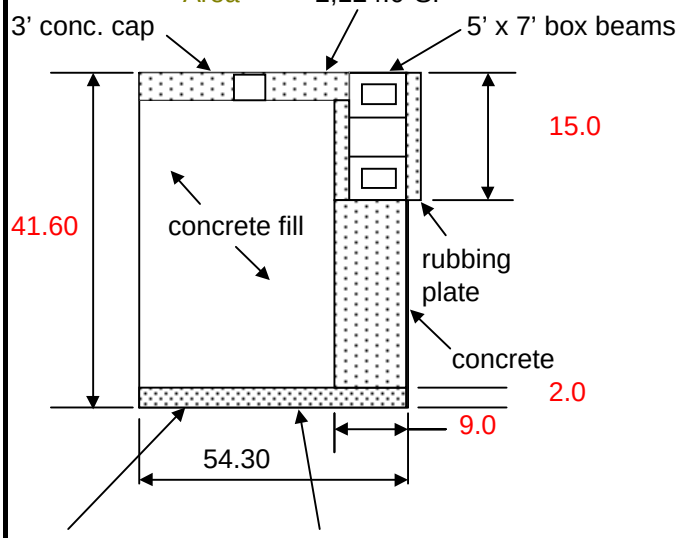

Area = 2,316.0 SF

Note: For quantities change the RED values in the cells of the dimensioned cross section shown.

Cast-in-Place Concrete

3' conc. cap	=	235	CY
concrete	=	254	CY
Total	=	489	CY
Tremie concrete	=	172	CY
Permanent Cell Fill		2,878	CY
Sheet Piling	=	7,096	SF

Subject		Date
L/D 18 Location 3 Quantities for Type B Lock, Crane-In Construcion		SEP 96
Computed by Michael Cummings	Checked	Sheet 5 of 6

Downstream Guidewall Cell, Small

(typical)

Area = 700.0 SF

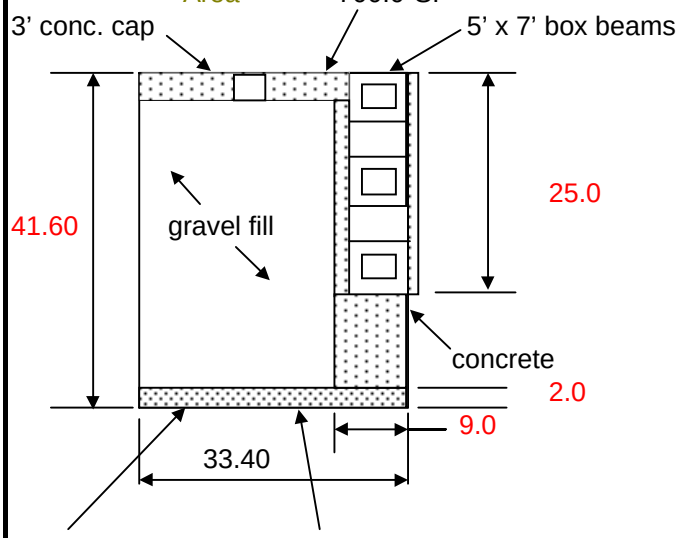

Area = 876.0 SF

Note: For quantities change the RED values in the cells of the dimensioned cross section shown.

Cast-in-Place Concrete

3' conc. cap	=	77	CY
concrete	=	151	CY
Total	=	228	CY
for 14 cells	=	3,186	CY
Tremie concrete	=	65	CY
for 14 cells	=	910	CY

Precast Concrete

5'x7' beam	=	2,667	CY
rubbing pl.	=	1,667	CY
Total	=	4,333	CY
Gravel fill	=	952	CY
for 14 cells	=	13,322	CY
Sheet Piling	=	4,365	SF
for 14 cells	=	61,111	SF

Downstream Guidewall Cell, Large

(typical)

Area = 2,124.0 SF

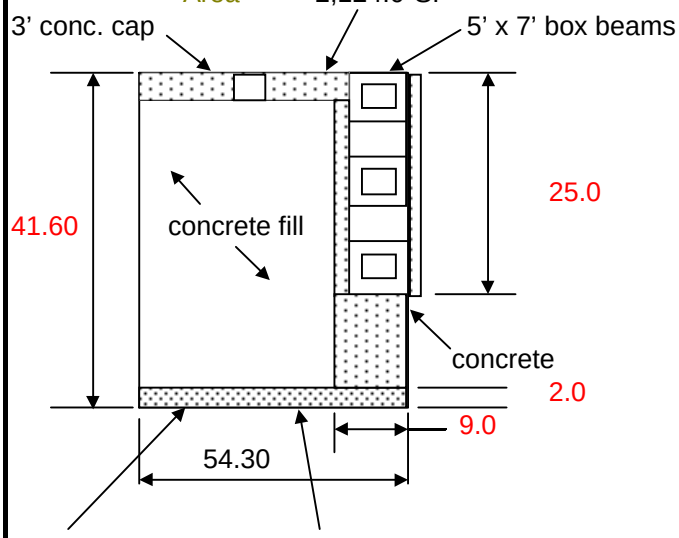

Area = 2,316.0 SF

Note: For quantities change the RED values in the cells of the dimensioned cross section shown.

Cast-in-Place Concrete

3' conc. cap	=	235	CY
concrete	=	415	CY
Total	=	650	CY
Tremie concrete	=	172	CY
Permanent Cell Fill		2,878	CY
Sheet Piling	=	7,096	SF

Subject		Date
L/D18 Location 3 Quantities for Type B Lock, Crane-In Construcion		SEP 96
Computed by Michael Cummings	Checked	Sheet 6 of 6

LOCK GUIDEWALLS :

A. UPSTREAM GUIDEWALL

1. Cast-in-place concrete

Volume = 2,421 CY

2. Precast concrete

Volume = 1,389 CY

3. Gravel Fill

Volume = 6,661 CY

4. Sheet Piling

Area = 37,652 SF

5. Permanent Cell Fill

Volume = 2,878 CY

6. Tremie Concrete

Volume = 627 CY

B. DOWNSTREAM GUIDEWALL

1. Cast-in-place concrete

Volume = 3,836 CY

2. Precast concrete

Volume = 4,333 CY

3. Gravel Fill

Volume = 13,322 CY

4. Sheet Piling

Area = 68,207 SF

5. Permanent Cell Fill

Volume = 2,878 CY

6. Tremie Concrete

Volume = 1,082 CY

Guidewall Summary

Total Cast-in-Place Concrete	6,257	CY
Total Precast Concrete	5,722	CY
Total Gravel Fill	19,984	CY
Total Sheet Piling	105,859	SF
Total Permanent Cell Fill	5,756	CY
Total Tremie Concrete	1,709	CY

LOCK AND DAM NO. 18, LOCATION 3, TYPE C
1200' LOCK ALTERNATIVE (PILE FOUNDED)

CCOUNT CODE	L/D 18	QUANTITY	UNIT	NIT PRICE ($'s)	AMOUNT ($1,000's)
01.	**LANDS AND DAMAGES**				
	REAL ESTATE	1	JOB	SUM	30
04.	**DAMS**				
	REMOVAL OF EXISTING STRUCTURES	1	JOB	SUM	2,150
	04 DAMS SUBTOTAL				2,150
05.	**LOCKS**				
	SITEWORK				
	MOBILIZATION	1	JOB	SUM	10,650
	DEMOLITION	1	JOB	SUM	1,910
	EXCAVATION	136,200	CY	6.25	851
	FOUNDATION FILL AT SCOUR HOLE	0	CY	18.75	0
	WALL FILL	15,760	CY	10.00	158
	CAPSTONE	52,660	TN	25.00	1,317
	RIPRAP	33,380	TN	20.00	668
	LEVELING STONE IN LOCK FLOOR	4,580	TN	15.00	69
	GRAVEL FILTER IN LOCK FLOOR	16,606	TN	15.00	249
	GEOTEXTILE	13,740	SY	6.00	82
	FOUNDATION/LOCK DEWATERING	1	JOB	SUM	3,000
	MARINE FACILITIES, TEMP. MOORING STR.	1	JOB	SUM	3,900
	CONCRETE				
	STRUCTURAL GROUTING	450	CY	200	90
	CAST IN PLACE REINFORCED CONCRETE	59,000	CY	217	12,803
	CAST IN PLACE CONNECTIONS	964	CY	725	699
	PRECAST CONCRETE	2,917	CY	400	1,167
	TREMIE CONCRETE	9,135	CY	165	1,507
	PRECAST FLOOR PAVERS AND STRUTS	15,450	CY	286	4,419
	SET PRECAST FLOOR BEAMS	31	EA	16000	496
	SET FLOOR PANELS	62	EA	10000	620
	STEEL REINFORCEMENT	6,608,000	LB	0.75	4,956
	METALS				
	SHEET PILING	260,100	SF	35.80	9,312
	SHEET PILE BRACING	1	JOB	SUM	350
	FOUNDATION PILING AND TESTING	222,300	LF	39.75	8,836
	STRUCTURAL STEEL (GATES, VALVES, TRASH	1	JOB	SUM	11,613
	STRUCTURAL STEEL (MISCELLANEOUS - LAD	1	JOB	SUM	3,040
	ELECTRICAL				
	ELECTRICAL SYSTEM	1	JOB	SUM	4,700
	INSTRUMENTATION	1	JOB	SUM	1,250
	MECHANICAL				
	GATE AND VALVE OPERATING MACHINERY	1	JOB	SUM	2,750
	MECHANICAL SYSTEMS	1	JOB	SUM	3,200
	MISCELLANEOUS	1	JOB	SUM	1,950
	05 LOCKS SUBTOTAL				96,611

LOCK AND DAM NO. 18, LOCATION 3, TYPE C
1200' LOCK ALTERNATIVE (PILE FOUNDED)

05.60.	**GUIDEWALLS**				
	SITEWORK				
	~~EXCAVATION~~ *(Included in Channel Work)*	0	CY	4.5	0
	~~BACKFILL~~ *None*	0	CY	10	0
	SCOUR PROTECTION	37,312	TON	15	560
	CONCRETE				
	42" DIAMETER PILES	5,120	LF	400	2,048
	CAST IN PLACE REINFORCED CONCRETE	977	CY	150	147
	PRECAST BEAMS	13,947	CY	500	6,973
	PRECAST BEAM SEATS	211	CY	1000	211
	TREMIE CONCRETE	168	CY	500	84
	PERMANENT CELL FILL (C0NCRETE)	7,863	CY	200	1,573
	GROUT FOR BEAMS	626	CY	1000	626
	STEEL REINFORCEMENT	2,351,969	LB	0.75	1,764
	GRAVEL FILL	38,533	CY	10	385
	METALS				
	SHEET PILING	1	JOB	SUM	6,131
	FOUNDATION PILING	1	JOB	SUM	256
	POST TENSIONING	1,634	LF	30	49
	STRUCTURAL STEEL	1	JOB	SUM	3,268
	FLOATING GUIDEWALL	1	JOB	SUM	3,750
	05.60 GUIDEWALLS SUBTOTAL				27,825
09.	**CHANNEL WORK**	1	JOB	SUM	200
	PROJECT SUBTOTAL				126,816
	CONTINGENCIES 25%				31,704
	PROJECT SUBTOTAL WITH CONTINGENCIES				158,520
30.	**PLANNING, ENGINEERING, AND DESIGN (10%)**				16,000
31.	**CONSTRUCTION MANAGEMENT (10%)**				16,000
	PROJECT TOTAL				$ 190,520

TOTAL BASIC LOCK COST (O4., 05., 05.60.) WITH CONTINGENCIES, PED, & CM* **$ 191,000**

*(EXCLUDES REAL ESTATE, RELOCATION, AND CHANNEL WORK WHICH ARE MORE SITE-SPECIFIC.)

Subject	ROCK FOUNDED LOCKS: L/D 18 Location 3 Quantities for Type C Lock, Parallel Sheetpile Walls	Date April 1997
Computed by David R. Wehrley	Checked DRW	Sheet 1 of 4

Riverward Lockwall

(Including the miter gate monolith)

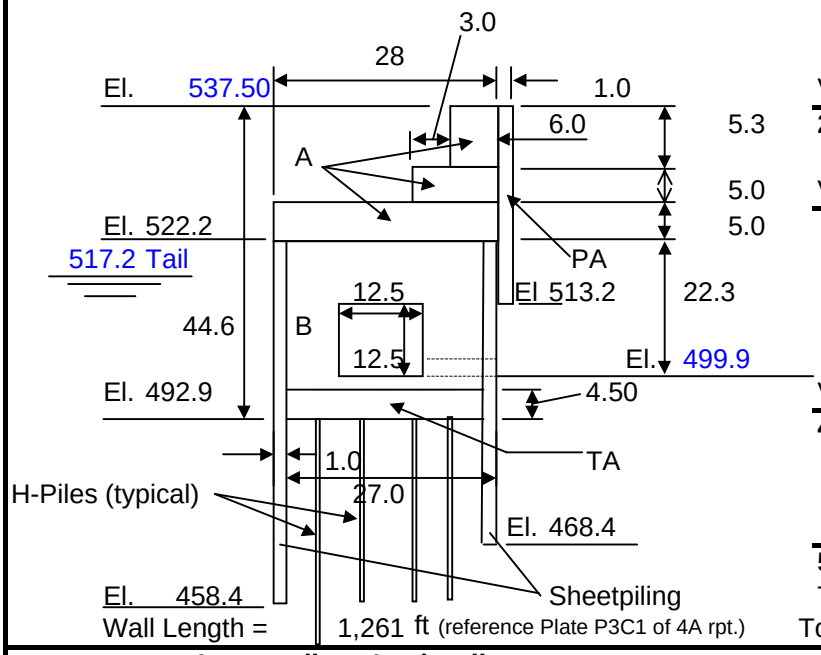

Wall Length = 1,261 ft (reference Plate P3C1 of 4A rpt.)

1. Cast in place concrete

A =	216.8	SF
B =	498.9	SF
Sum =	715.7	SF
Volume =	**33,424**	CY

2. Tremie concrete

TA =	121.5	SF
Volume =	**5,675**	CY

3. Precast concrete

PA =	24.3	SF
PB =	14.5	SF (Culvert top, not shown)
Sum =	38.8	SF
Volume =	**1,812**	CY

4. Sheetpiling

Ht. Left=	63.8	FT
Ht. Right=	53.8	FT
Area =	**148,294**	SF (both sides)

5. H-Piling = 54/45' mono x wall length

Total No.=	1,513	HP 14 X89
Total Lgth.=	**113,490**	LF HP

Intermediate Lockwall

(Including the miter gate monolith)

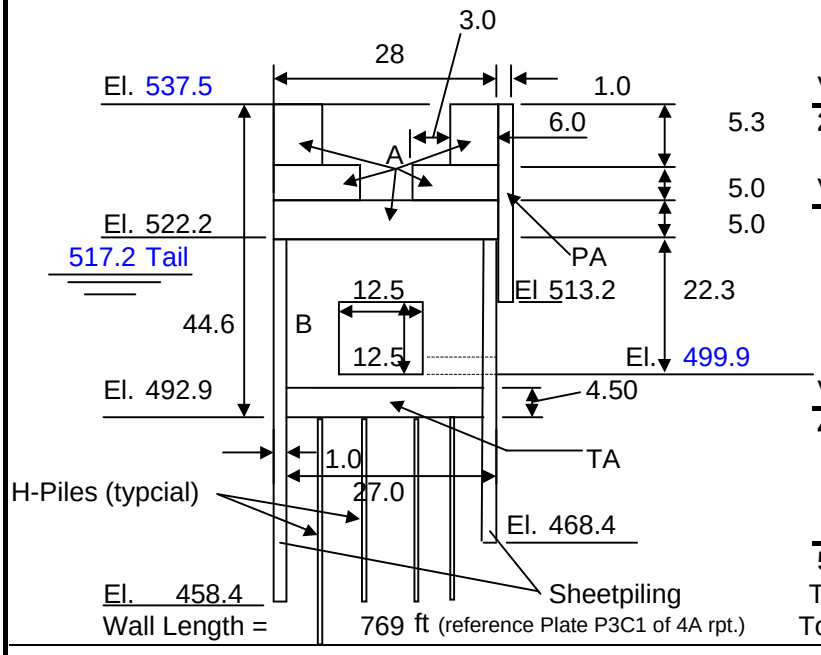

Wall Length = 769 ft (reference Plate P3C1 of 4A rpt.)

1. Cast in place concrete

A =	293.6	SF
B =	498.9	SF
Sum =	792.5	SF
Volume =	**22,570**	CY

2. Tremie concrete

TA =	121.5	SF
Volume =	**3,461**	CY

3. Precast concrete

PA =	24.3	SF
PB =	14.5	SF (Culvert top, not shown)
Sum =	38.8	SF
Volume =	**1,105**	CY

4. Sheetpiling

Ht. Left=	63.8	FT
Ht. Right=	53.8	FT
Area =	**90,434**	SF (both sides)

5. H-Piling = 54/45' mono x wall length

Total No.=	923	HP 14 X89
Total Lgth.=	**69,210**	FT HP

Subject		Date
L/D 18 Location 3 Quantities for Type C Lock, Parallel Sheetpile Walls		April 1997
Computed by David R. Wehrley	Checked	Sheet 2 of 4

COFFERDAM (ONLY SINGLE WALL COFFERDAM -- FOR LOWER MITER GATE MONOLITH):

ASSUME THE SAME AS L/D 25

Extra Sheetpiling = 2 x (29+110+29) x length
= 21,437 LF Sheetpiling

LOWER MITER GATE SILL:

Length =	120.0 ft	**Volume =**	2,933.3 CY (cast-in-place concrete)
Width =	110.0 ft		
Average Height =	6.0 ft		

H-piling for sill: Assume 5' spacing each way, 75' long
Total = (120/5 x 110/5) x 75
= 39,600 LF (HP 14X89)

SUMMARY:

CONCRETE (Cast in place)

Lockwalls =	55,994 CY
Sills =	2,933 CY
Total =	59,000 CY

PRECAST CONCRETE

Total = 2,917 CY

TREMIE CONCRETE

Total = 9,135 CY

SHEETPILING

Required quantity for walls =	238,700 SF
Required quantity for cofferdam =	21,400 SF
Total =	260,100 SF of piling

FOUNDATION PILING

Total = 222,300 LF (HP 14 X 89)

Subject		Date
L/D 18 Location 3 Quantities for Type C Lock, Guardwalls		April 1997
Computed by David R. Wehrley	Checked David R. Wehrley	Sheet 3 of 4

Upstream Guardwall Cell, Small (14 total)
(Downstream Quantities the same)

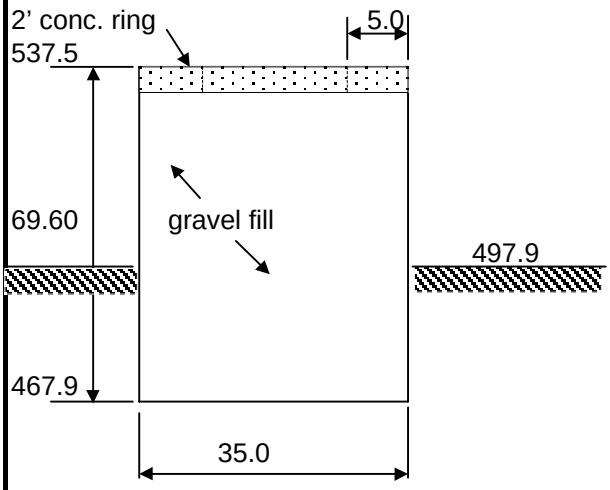

Except for those quantities computed here, all other quantities are assumed the same as for Lock 25 (the model site for pile-founded locks).

Cast-in-Place Concrete

2' conc. ring	=	34.9	CY
for 14 cells	=	489	CY
Gravel fill	=	1,376	CY
for 14 cells	=	19,267	CY
Sheet Piling	=	7,653	SF
for 14 cells	=	107,141	SF

Upstream Guardwall Cell, Large, Concrete filled (1 total)
(Downstream Quantities the same)

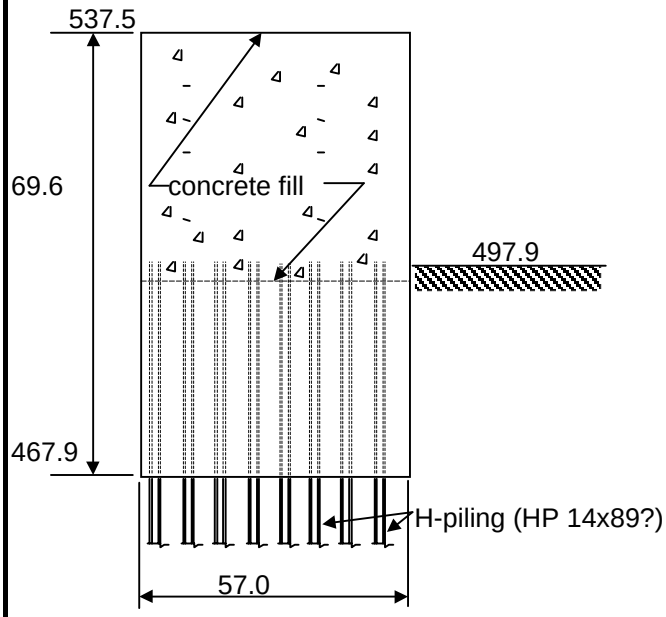

Concrete Fill for Cell
= 3,932 CY

Sheet Piling = 12,463 SF

H-piling:
No. of Piles = 102
Length of Piles = 7,650 L.F.

Subject		Date
L/D 18 Location 3 Quantities for Type C Lock, Guardwalls		April 1997
Computed by David R. Wehrley	Checked David R. Wehrley	Sheet 4 of 4

LOCK GUIDEWALLS :

A. UPSTREAM GUIDEWALL

1. Concrete Rings (cast-in-place)

Volume = 489 CY

2. Concrete cell fill

Volume = 3,932 CY

3. Gravel Fill

Volume = 19,267 CY

4. Sheet Piling

Area = 119,604 SF

5. H-Piling

Length = 7,650 LF

B. DOWNSTREAM GUIDEWALL

1. Concrete Rings (cast-in-place)

Volume = 489 CY

2. Concrete cell fill

Volume = 3,932 CY

3. Gravel Fill

Volume = 19,267 CY

4. Sheet Piling

Area = 119,604 SF

5. H-Piling

Length = 7,650 LF

Guidewall Summary

Total Cast-in-Place Concrete	977	CY
Total Concrete Fill	7,863	CY
Total Gravel Fill	38,533	CY
Total Sheet Piling	239,208	SF
Total H-Piling	15,300	LF

LOCK AND DAM NO.18, LOCATION NO.4, TYPE A,
1200' LOCK ALTERNATIVE (PILE FOUNDED)

ACCOUNT CODE	ITEM	QUANTITY	UNIT	UNIT PRICE ($'s)	AMOUNT ($1,000's)
01.	**LANDS AND DAMAGES**				
	REAL ESTATE	1	JOB	SUM	30
04.	**DAMS**				
	DEMOLITION (TAINTER GATE BAY NO.1)	1	JOB	SUM	1,504
	CONCRETE (TIE-IN TO EXISTING LOCK)	362	CY	280.00	101
	MISCELLANEOUS	1	JOB	SUM	150
	REPLACEMENT TAINTER GATE	1	JOB	SUM	25,000
	04 DAMS SUBTOTAL				26,755
05.	**LOCKS**				
	SITEWORK				
	MOBILIZATION	1	JOB	SUM	10,650
	DEMOLITION	1	JOB	SUM	1,910
	EXCAVATION	48,960	CY	6.25	306
	FOUNDATION FILL AT SCOUR HOLE	0	CY	18.75	0
	LOCK WALL FILL AND COFFERDAM FILL	332,500	CY	10.00	3,325
	CAPSTONE	52,660	TN	25.00	1,317
	RIPRAP	33,380	TN	20.00	668
	LEVELING STONE IN LOCK FLOOR	4,580	TN	15.00	69
	GRAVEL FILTER IN LOCK FLOOR	16,606	TN	15.00	249
	GEOTEXTILE	13,740	SY	6.00	82
	FOUNDATION/LOCK DEWATERING	1	JOB	SUM	3,000
	MARINE FACILITIES, TEMP. MOORING STR.	1	JOB	SUM	3,900
	CONCRETE				
	STRUCTURAL GROUTING	450	CY	200	90
	CAST IN PLACE REINFORCED CONCRETE	106,400	CY	217	23,089
	CAST IN PLACE CONNECTIONS	964	CY	725	699
	PRECAST CONCRETE	0	CY	400	0
	TREMIE CONCRETE, BASE .	12,736	CY	165	2,101
	PRECAST FLOOR PAVERS AND STRUTS	15,450	CY	286	4,419
	SET PRECAST FLOOR BEAMS	31	EA	16000	496
	SET FLOOR PANELS	62	EA	10000	620
	STEEL REINFORCEMENT	6,384,000	LB	0.75	4,788
	METALS				
	SHEET PILING	648,200	SF	35.80	23,206
	SHEET PILE BRACING	1	JOB	SUM	350
	FOUNDATION PILING AND TESTING	209,190	LF	39.75	8,315
	STRUCTURAL STEEL (GATES, VALVES, ETC.)	1	JOB	SUM	11,613
	STRUCT. STEEL (MISCELLANEOUS - LADDERS, ETC.)	1	JOB	SUM	3,040
	ELECTRICAL				
	ELECTRICAL SYSTEM		JOB	SUM	4,700
	INSTRUMENTATION	1	JOB	SUM	1,250
	MECHANICAL				
	GATE AND VALVE OPERATING MACHINERY	1	JOB	SUM	2,750
	MECHANICAL SYSTEMS	1	JOB	SUM	3,200
	MISCELLANEOUS	1	JOB	SUM	1,950
	05 LOCKS SUBTOTAL				122,151

LOCK AND DAM NO.18, LOCATION NO.4, TYPE A,
1200' LOCK ALTERNATIVE (PILE FOUNDED)

05.60.	**GUIDEWALLS**				
	SITEWORK				
	EXCAVATION	118,490	CY	4.5	533
	BACKFILL	73,640	CY	10	736
	SCOUR PROTECTION	46,350	TON	15	695
	CONCRETE				
	42" DIAMETER PILES	6,360	LF	400	2,544
	CAST IN PLACE REINFORCED CONCRETE	6,257	CY	150	938
	PRECAST BEAMS	17,325	CY	500	8,663
	PRECAST BEAM SEATS	262	CY	1000	262
	TREMIE CONCRETE	1,709	CY	500	855
	PERMANENT CELL FILL (C0NCRETE)	5,756	CY	200	1,151
	GROUT FOR BEAMS	778	CY	1000	778
	STEEL REINFORCEMENT	2,921,700	LB	0.75	2,191
	GRAVEL FILL	19,984	CY	10	200
	METALS				
	SHEET PILING	105,859	SF	25.00	2,646
	FOUNDATION PILING	1	JOB	SUM	318
	POST TENSIONING	2,030	LF	30	61
	STRUCTURAL STEEL	1	JOB	SUM	4,060
	05.60 GUIDEWALLS SUBTOTAL				26,632
09.	**CHANNEL WORK**	1	JOB	SUM	60
	PROJECT SUBTOTAL				175,628
	CONTINGENCIES 25%				43,907
	PROJECT SUBTOTAL WITH CONTINGENCIES				219,536
30.	**PLANNING, ENGINEERING, AND DESIGN (10%)**				22,000
31.	**CONSTRUCTION MANAGEMENT (10%)**				22,000
	PROJECT TOTAL				$ 264,000

LOCK AND DAM NO.18, LOCATION 4, TYPE A
1200'LOCK ALTERNATIVE (PILE FOUNDED)

Subject	PILE FOUNDED LOCKS: L/D 18 Location 4 Quantities for Type A Lock, Crane-In Construction	Date Sep 96
Computed by Michael Cummings	Checked	Sheet 1 of 6

Gate Monolith

Note: For quantities change the RED values in the cells of the dimensioned cross section shown.

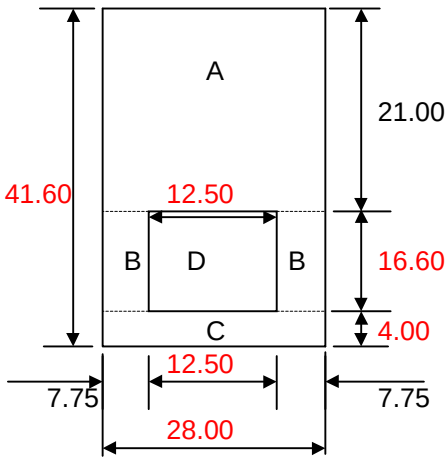

Cast in place concrete

A_g =	588.0	ft^2	
B_g =	257.3	ft^2	
C_g =	112.0	ft^2	
D_g =	207.5	ft^2	CULVERT
Total =	957.3	ft^2	

Tremie concrete (below "C")

132.0 ft^2

hght chk = 41.60 left
hght chk = 41.60 right

US lngth = 265.0 ft DS lngth = 240.0 ft

Lock Wall
typical

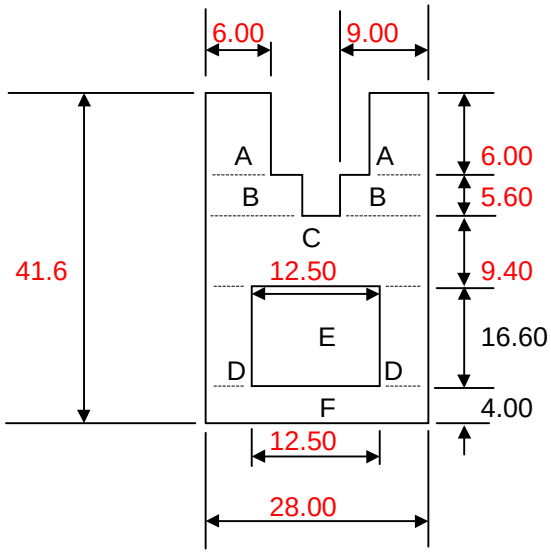

Cast in place concrete

A_w =	72.00	ft^2	
B_w =	100.80	ft^2	
C_w =	263.20	ft^2	
D_w =	257.30	ft^2	
E_w =	207.50	ft^2	CULVERT
F_w =	112.00	ft^2	
Total =	805.30	ft^2	

Tremie concrete (below "F")

132.0 ft^2

hght chk = 41.60 left
hght chk = 41.60 right

RS Wall = 1,050.0 ft LS Wall = 1,050.0 ft

LOCK AND DAM NO.18, LOCATION 4, TYPE A
1200'LOCK ALTERNATIVE (PILE FOUNDED)

Subject		Date
L/D 18 Location 4 Quantities for Type A Lock, Crane-In Construction		Sep 96
Computed by Michael Cummings	Checked	Sheet 2 of 6

Typical cell for cofferdam

Area = 1,736.0 ft^2

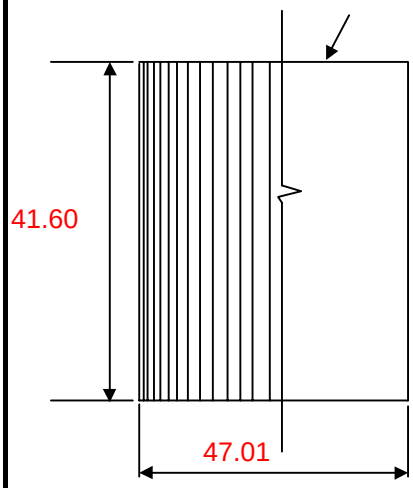

Pile type: PS31
Choose PSA23, PS27.5, or PS31

Area between cells:

Area =	773.0	ft^2
Distance =	15.28	ft
Length =	1.64	ft
Number in cell =	90	piles
No. in space =	20	piles
US Length =	2,650.0	ft
DS Length =	2,650.0	ft

LOCK CHAMBER WALLS:

A. WALL MONOLITHS

1. River side walls

(a) Cast in place concrete

Volume = 31,317.2 CY

(b) Precast concrete

Volume = .0 CY

1. Land side walls

(a) Cast in place concrete

Volume = 31,317.2 CY

(b) Precast concrete

Volume = .0 CY

B. GATE MONOLITHS

1. Upstream cast in place concrete

Volume = 18,791.4 CY

2. Upstream precast concrete

Volume = .0 CY

1. Downstream cast in place concrete

Volume = 17,018.7 CY

2. Downstream precast concrete

Volume = .0 CY

LOCK AND DAM NO.18, LOCATION 4, TYPE A
1200'LOCK ALTERNATIVE (PILE FOUNDED)

Subject		Date
L/D 18 Location 4 Quantities for Type A Lock, Crane-In Construcion		Sep 96
Computed by Michael Cummings	Checked	Sheet 3 of 6

COFFERDAMS:

1. Cofferdam #1, Upstream

Number = 43.0 cells

Total = 9,460.0 piles

2. Cofferdam #2, Upstream

Number = 43.0 cells

Total = 332,452.0 CY fill volume

SILLS:

Length = 120.0 ft
Width = 111.0 ft
Height = 8.0 ft

Volume = 7,893.3 CY

SUMMARY:

CONCRETE (Cast in place)

A.	Lockwalls =	62,634.4 CY
B.	Gate monoliths =	35,810.1 CY
C.	Sills =	7,893.3 CY
D.	Tremie =	12,735.6 CY
	Total =	106,400.0 CY

PRECAST CONCRETE

A.	Lockwalls =	.0 CY
B.	Gate monoliths =	.0 CY
	Total =	.0 CY

SHEETPILES

A.	Required number for cofferdams =	9,460.0 piles
B.	Required number for walls =	0 piles
	Total =	9,500.0 piles
	Total =	648,200.0 SF of piling

FILL

A.	Required fill for cofferdams =	332,452.0 CY
	Total =	332,500.0 CY

LOCK AND DAM NO.18, LOCATION 4, TYPE A
1200'LOCK ALTERNATIVE (PILE FOUNDED)

Subject		Date
L/D 18 Location 4 Quantities for Type B Lock, Crane-In Construcion		Sep 96
Computed by Michael Cummings	Checked	Sheet 4 of 6

Upstream Guidewall Cell, Small

(typical)

Area = 700.0 SF

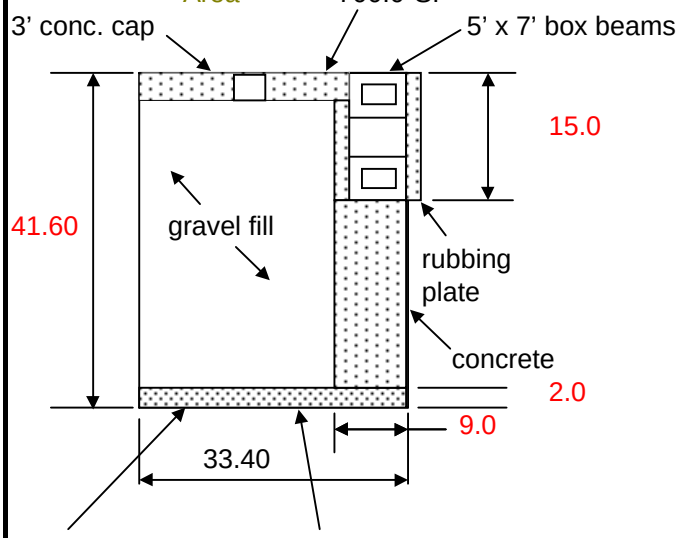

Area = 876.0 SF

Note: For quantities change the RED values in the cells of the dimensioned cross section shown.

Cast-in-Place Concrete

3' conc. cap	=	77	CY
concrete	=	199	CY
Total	=	276	CY
for 7 cells	=	1,931	CY
Tremie concrete	=	65	CY
for 7 cells	=	455	CY

Precast Concrete

5'x7' beam	=	889	CY
rubbing pl.	=	500	CY
Total	=	1,389	CY
Gravel fill	=	952	CY
for 7 cells	=	6,661	CY
Sheet Piling	=	4,365	SF
for 7 cells	=	30,555	SF

Upstream Guidewall Cell, Large

(typical)

Area = 2,124.0 SF

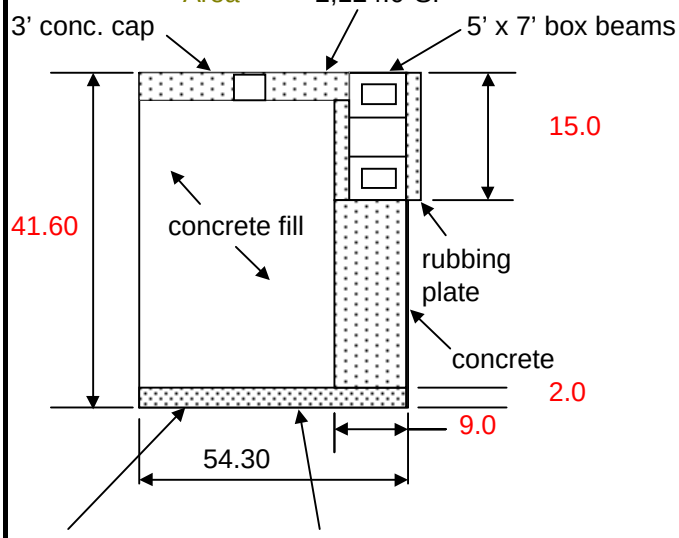

Area = 2,316.0 SF

Note: For quantities change the RED values in the cells of the dimensioned cross section shown.

Cast-in-Place Concrete

3' conc. cap	=	235	CY
concrete	=	254	CY
Total	=	489	CY
Tremie concrete	=	172	CY
Permanent Cell Fill		2,878	CY
Sheet Piling	=	7,096	SF

LOCK AND DAM NO.18, LOCATION 4, TYPE A
1200'LOCK ALTERNATIVE (PILE FOUNDED)

Subject		Date
L/D 18 Location 4 Quantities for Type B Lock, Crane-In Construcion		Sep 96
Computed by Michael Cummings	Checked	Sheet 5 of 6

Downstream Guidewall Cell, Small

(typical)

Area = 700.0 SF

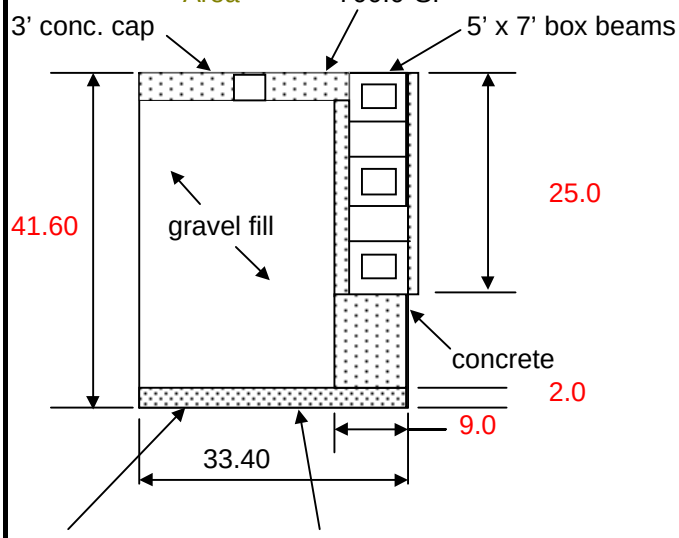

Area = 876.0 SF

Note: For quantities change the RED values in the cells of the dimensioned cross section shown.

Cast-in-Place Concrete			
3' conc. cap	=	77	CY
concrete	=	151	CY
Total	=	228	CY
for 14 cells	=	3,186	CY
Tremie concrete	=	65	CY
for 14 cells	=	910	CY
Precast Concrete			
5'x7' beam	=	2,667	CY
rubbing pl.	=	1,667	CY
Total	=	4,333	CY
Gravel fill	=	952	CY
for 14 cells	=	13,322	CY
Sheet Piling	=	4,365	SF
for 14 cells	=	61,111	SF

Downstream Guidewall Cell, Large

(typical)

Area = 2,124.0 SF

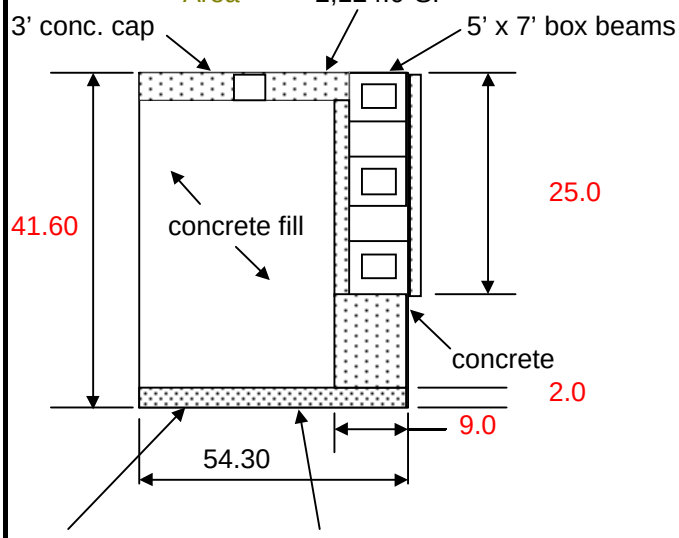

Area = 2,316.0 SF

Note: For quantities change the RED values in the cells of the dimensioned cross section shown.

Cast-in-Place Concrete			
3' conc. cap	=	235	CY
concrete	=	415	CY
Total	=	650	CY
Tremie concrete	=	172	CY
Permanent Cell Fill		2,878	CY
Sheet Piling	=	7,096	SF

LOCK AND DAM NO.18, LOCATION 4, TYPE A
1200'LOCK ALTERNATIVE (PILE FOUNDED)

Subject		Date
L/D 18 Location 4 Quantities for Type B Lock, Crane-In Construcion		Sep 96
Computed by Michael Cummings	Checked	Sheet 6 of 6

LOCK GUIDEWALLS :

A. UPSTREAM GUIDEWALL

1. Cast-in-place concrete

Volume = 2,421 CY

2. Precast concrete

Volume = 1,389 CY

3. Gravel Fill

Volume = 6,661 CY

4. Sheet Piling

Area = 37,652 SF

5. Permanent Cell Fill

Volume = 2,878 CY

6. Tremie Concrete

Volume = 627 CY

B. DOWNSTREAM GUIDEWALL

1. Cast-in-place concrete

Volume = 3,836 CY

2. Precast concrete

Volume = 4,333 CY

3. Gravel Fill

Volume = 13,322 CY

4. Sheet Piling

Area = 68,207 SF

5. Permanent Cell Fill

Volume = 2,878 CY

6. Tremie Concrete

Volume = 1,082 CY

Guidewall Summary

Total Cast-in-Place Concrete	6,257	CY
Total Precast Concrete	5,722	CY
Total Gravel Fill	19,984	CY
Total Sheet Piling	105,859	SF
Total Permanent Cell Fill	5,756	CY
Total Tremie Concrete	1,709	CY

LOCK AND DAM NO.18, LOCATION 4, TYPE B,
1200' LOCK ALTERNATIVE (PILE FOUNDED)

ACCOUNT CODE	ITEM	QUANTITY	UNIT	UNIT PRICE ($'s)	AMOUNT ($1,000's)
01.	**LANDS AND DAMAGES**				
	REAL ESTATE	1	JOB	SUM	200
04.	**DAMS**				
	DEMOLITION (TAINTER GATE BAY NO.1)	1	JOB	SUM	1,504
	REPLACEMENT TAINTER GATE	1	JOB	SUM	25,000
	04 DAMS SUBTOTAL				26,504
05.	**LOCKS**				
	SITEWORK				
	MOBILIZATION	1	JOB	SUM	8,000
	DEMOLITION	1	JOB	SUM	1,910
	EXCAVATION	117,700	CY	4.50	530
	BACKFILL	160,000	CY	6.25	1,000
	CAPSTONE	52,660	TN	25.00	1,317
	SCOUR PROTECTION	1	JOB	SUM	2,300
	RIPRAP	143,700	TN	20.00	2,874
	STONE FILL	16,606	TN	15.00	249
	GEOTEXTILE	13,740	SY	6.00	82
	FOUNDATION/LOCK DEWATERING	1	JOB	SUM	3,000
	COFFERDAM REMOVAL	1	JOB	SUM	81
	MARINE FACILITIES, TEMP. MOORING STR.	1	JOB	SUM	3,900
	CONCRETE				
	STRUCTURAL GROUTING	1	JOB	SUM	5,400
	CAST IN PLACE REINFORCED CONCRETE	43,200	CY	217	9,374
	CAST IN PLACE CONNECTIONS	964	CY	725	699
	PRECAST CONCRETE LOCK FLOOR	8,600	CY	400	3,440
	PRECAST CONCRETE CHAMBER AND APPROACH WALL	7,500	CY	400	3,000
	TREMIE CONCRETE, BASE	20,300	CY	165	3,350
	TREMIE CONCRETE, WALLS	46,600	CY	165	7,689
	FURNISH AND SET LANDING PADS	24	EA	19000	456
	SET PRECAST WALL UNITS	88	EA	16000	1,408
	FLOAT IN AND SET FLOOR UNITS	11	EA	40000	440
	STEEL REINFORCEMENT	5,400,000	LB	0.75	4,050
	STEEL CULVERT PIPE	5,278,500	LB	0.65	3,431
	METALS				
	SHEET PILING	1	JOB	SUM	6,400
	SHEET PILE BRACING	1	JOB	SUM	600
	FOUNDATION PILING AND TESTING	1	JOB	SUM	15,000
	STRUCTURAL STEEL (GATES, VALVES, ETC.)	1	JOB	SUM	11,600
	STRUCT. STEEL (MISCELLANEOUS - LADDERS, ETC.)	1	JOB	SUM	3,000
	ELECTRICAL				
	ELECTRICAL SYSTEM		JOB	SUM	4,700
	INSTRUMENTATION	1	JOB	SUM	1,250
	MECHANICAL				
	GATE AND VALVE OPERATING MACHINERY	1	JOB	SUM	2,750
	MECHANICAL SYSTEMS	1	JOB	SUM	3,200
	MISCELLANEOUS	1	JOB	SUM	1,950
	05 LOCKS SUBTOTAL				118,430

LOCK AND DAM NO.18, LOCATION 4, TYPE B,
1200' LOCK ALTERNATIVE (PILE FOUNDED)

05.60.	**GUIDEWALLS**				
	SITEWORK				
	EXCAVATION	118,490	CY	4.5	533
	BACKFILL	73,640	CY	10	736
	SCOUR PROTECTION	211,130	TON	15	3,167
	CONCRETE				
	42" DIAMETER PILES	6,360	LF	400	2,544
	CAST IN PLACE REINFORCED CONCRETE	12,884	CY	150	1,933
	PRECAST BEAMS	17,325	CY	500	8,663
	PRECAST BEAM SEATS	262	CY	1000	262
	TREMIE CONCRETE	1,709	CY	500	855
	PERMANENT CELL FILL (C0NCRETE)	12,030	CY	200	2,406
	GROUT FOR BEAMS	778	CY	1000	778
	STEEL REINFORCEMENT	2,921,700	LB	0.75	2,191
	GRAVEL FILL	41,769	CY	10	418
	METALS				
	SHEET PILING	207,392	SF	25.00	5,185
	FOUNDATION PILING	1	JOB	SUM	318
	POST TENSIONING	2,030	LF	30	61
	STRUCTURAL STEEL	1	JOB	SUM	4,060
	05.60 GUIDEWALLS SUBTOTAL				34,109
09.	**CHANNEL WORK**	1	JOB	SUM	2,974
	PROJECT SUBTOTAL				182,217
	CONTINGENCIES 25%				45,554
	PROJECT SUBTOTAL WITH CONTINGENCIES				227,771
30.	**PLANNING, ENGINEERING, AND DESIGN (10%)**				23,000
31.	**CONSTRUCTION MANAGEMENT (10%)**				23,000
	PROJECT TOTAL				$ 274,000

LOCK AND DAM NO.18, LOCATION 4, TYPE B,
1200' LOCK ALTERNATIVE (PILE FOUNDED)

Subject	PILE FOUNDED LOCKS: 1200 ft lock L/D 18 Location 4 Quantities for Type B Lock	Date OCT 1996
Computed by Michael Cummings	Checked	Sheet 1 of 7

Gate Monolith
(typical)

Note: For quantities change the RED values in the cells of the dimensioned cross section shown.

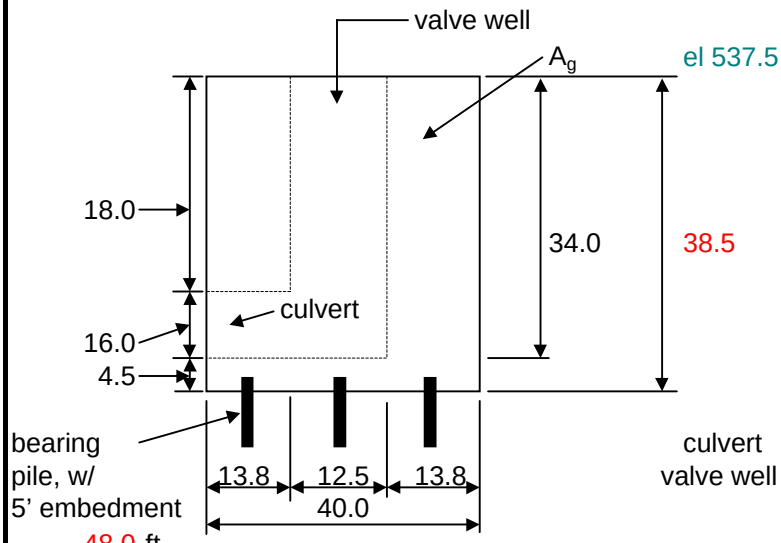

Cast in place concrete

A_g =	15,155.6	CY	U.S.
A_g =	18,292.6	CY	D.S.
Total =	33,448.1	CY	

The culverts are subtracted gross volume

	width	length	heighth	
culvert =	12.5	16.0	50.0	CF
valve well =	12.5	16.0	13.8	CF

48.0 ft

US gates length = 137.0 ft DS gates length = 164.5 ft

hght chk =	38.50	left
hght chk =	38.50	right

Lock Wall
(typical)

Note: For quantities change the RED values in the cells of the dimensioned cross section

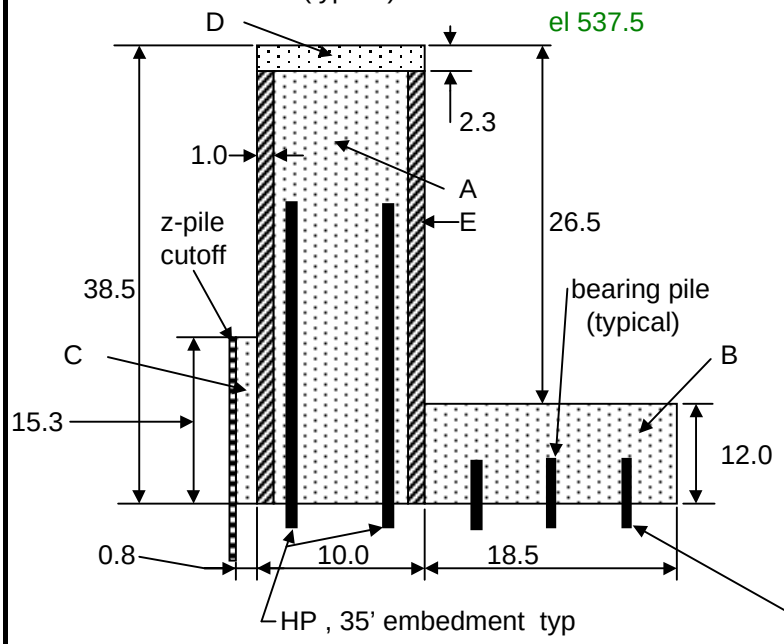

Tremie concrete / CIP

A =	289.6	SF
B =	222.0	SF
C =	11.5	SF

Cast in place

D =	23.0	SF

Pre-cast

E =	72.4	SF
Total =		SF

HP reinforcing ratio = 0.960 HP/ft

Total HP walls = 2,088.0 ea

Total bearing pile = 13,050.0 ea
assume 3' spacing

78.0 ft total length 48.0 ft

RS Wall = 1,087.5 ft LS Wall = 1,087.5 ft

hght chk =	38.50	left
hght chk =	38.50	right

L184bp

LOCK AND DAM NO.18, LOCATION 4, TYPE B,
1200' LOCK ALTERNATIVE (PILE FOUNDED)

Subject	PILE FOUNDED LOCKS: 1200 ft lock L/D 18 Location 4 Quantities for Type B Lock	Date OCT 1996
Computed by Michael Cummings	Checked	Sheet 2 of 7

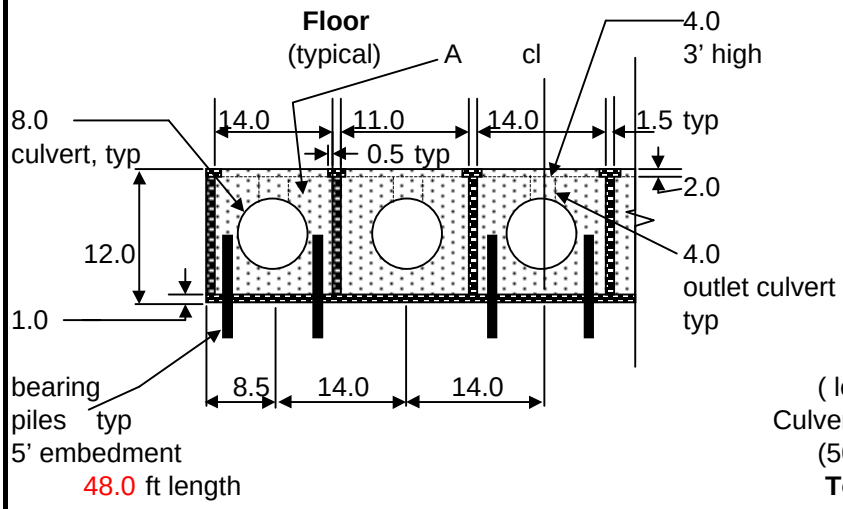

Tremie concrete
A = 442.7 SF
Pre-cast
B = 182.0 SF

Total = 624.7 SF

Piles: 6 rows = 7,620.0 piles
(length not determined)
Culvert fill/empty area = 11.31 CF/ft
(50 ft section from plate P4B2)
Total tremie conc = 20,290.0 CY

Total pre-cast = 8,560.7 CY

Length of floor = 1,270.0 ft width of floor = 73.0 ft

Impact cell
typical
Area = 2,827.0 ft^2

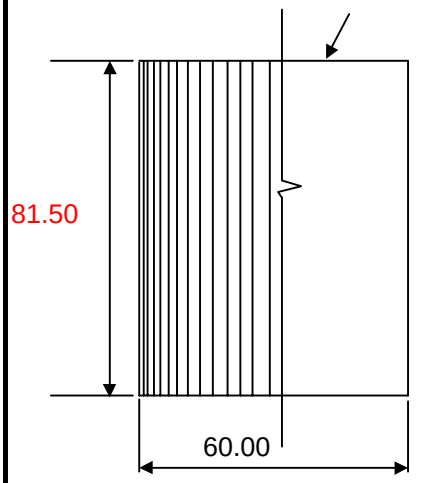

Note: For quantities change the RED values in the cells of the dimensioned cross section shown.

Pile type: PS31
Choose PSA23, PS27.5, or PS31

Area between cells:
Area = 1,127.0 SF

Length = 1.641 ft
Number in cell = 115 piles

US number = 1.0 cells and spaces between cells
DS number = 1.0 cells and spaces between cells

US Wall = 994.0 ft DS Wall = 1,016.0 ft

LOCK AND DAM NO.18, LOCATION 4, TYPE B,
1200' LOCK ALTERNATIVE (PILE FOUNDED)

Subject	PILE FOUNDED LOCKS: 1200 ft lock L/D 18 Location 4 Quantities for Type B Lock	Date OCT 1996
Computed by Michael Cummings	Checked	Sheet 3 of 7

cofferdam cell
typical
Area = 1,963.0 ft^2

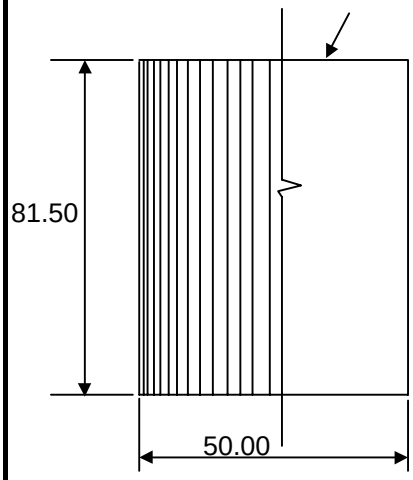

Note: For quantities change the RED values in the cells of the dimensioned cross section shown.

Pile type: PS31
Choose PSA23, PS27.5, or PS31

Area between cells:

Area =	855.0	SF
Distance =	15.91	ft
Length =	1.641	ft
Number in cell =	96	piles
No. in space =	21	piles

UPSTREAM

North or South length:	264.0	.4	modular numbers
East or West length:	330.0	.5	to aid in value search

DOWNSTREAM

North or South length:	264.0	.4	modular numbers
East or West length:	330.0	.5	to aid in value search

US	Total number of cells:	9.0	DS	Total number of cells:	9.0
US	Total number of cells:	11.0	DS	Total number of cells:	11.0

LOCK CHAMBER WALLS:

A. WALL MONOLITHS

1. River side walls
(a) Cast in place concrete
Volume = 926.4 CY
(b) Tremie concrete
Volume = 21,068.3 CY
(c) Pre-cast concrete
Volume = 3,164.2 CY
(d) Pre-cast concrete (approach wall)
Volume = 747.8 CY
(e) Tremie concrete (approach wall)
Volume = 2,931.7 CY

1. Land side walls
(a) Cast in place concrete
Volume = 926.4 CY
(b) Tremie concrete
Volume = 21,068.3 CY
(c) Pre-cast concrete
Volume = 3,164.2 CY
(d) Pre-cast concrete (approach wall)
Volume = 378.3 CY
(e) Tremie concrete (approach wall)
Volume = 1,483.0 CY

B. GATE MONOLITHS

1. Upstream cast in place concrete
Volume = 15,155.6 CY
Piles = 2900 LF

1. Downstream cast in place concrete
Volume = 18,292.6 CY
Piles = 3300 LF

IMPACT CELLS

Total = 230.0 piles
Total = 18,745.0 SF of piling

Total = 17,067.0 CY fill volume

LOCK AND DAM NO.18, LOCATION 4, TYPE B,
1200' LOCK ALTERNATIVE (PILE FOUNDED)

Subject	PILE FOUNDED LOCKS: 1200 ft lock L/D 18 Location 4 Quantities for Type B Lock	Date OCT 1996
Computed by Michael Cummings	Checked	Sheet 4 of 7

SILLS:

Length = 120.0 ft **Volume =** 7,893.0 CY of CIP concrete
111.0 ft
8.0 ft

COFFERDAM CELLS:

Upstream riverside
Total = 2,340.0 piles
Total = 312,955.0 SF of piling

Downstream riverside
Total = 2,340.0 piles
Total = 312,955.0 SF of piling

SUMMARY:

Lockwalls:

CONCRETE (Precast)
A. Lockwalls = 6,328.4 CY
B. Approach walls = 1,126.0 CY **Total =** 7,500.0 CY

CONCRETE (CIP, Cast in place)
A. Lockwalls = 1,852.8 CY
B. Gate mono's = 33,448.1 CY
C. Sills = 7,893.0 CY **Total =** 43,200.0 CY

CONCRETE (Tremie)
A. Lockwalls = 42,136.6
B. Approach walls = 4,414.7 **Total =** 46,600.0 CY

HP PILING **Total =** 81,500.0 LF

BEARING PILES:
Total = 110,600.0 LF

Lock Floor:

CONCRETE:
A. Tremie concrete = 20,300.0 CY
B. Precast = 8,600.0 CY

BEARING PILES:
Total = 122,000.0 LF

Impact cells:

A. SHEETPILES
1. Required number for impact cells = 230.0 piles
Total = 300.0 piles **Total =** 40,200.0 SF of piling

2. Required number for seepage cutoff
Total = .0 SF

B. FILL
1. Required fill for cofferdams = #REF! CY
Total = #REF! CY includes losses from compaction, etc

Cofferdam sheet piling

A. SHEETPILE, up and down stream
Total = 4,700.0 piles **Total =** 626,000.0 SF

LOCK AND DAM NO.18, LOCATION 4, TYPE B,
1200' LOCK ALTERNATIVE (PILE FOUNDED)

Subject	PILE FOUNDED LOCKS: L/D 18 Location 4 Quantities for Type B Lock	Date OCT 1996
Computed by Michael Cummings	Checked	Sheet 5 of 7

Upstream Guidewall Cell, Small

(typical)

Area = 700.0 SF

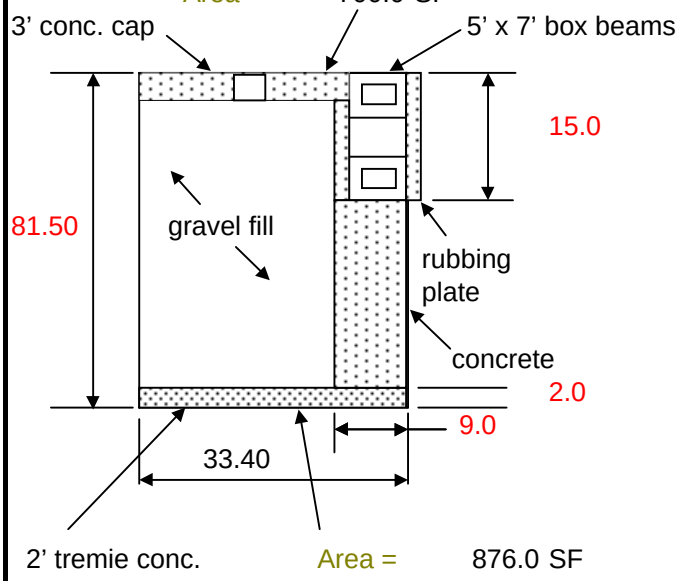

Area = 876.0 SF

Note: For quantities change the RED values in the cells of the dimensioned cross section shown.

Cast-in-Place Concrete			
3' conc. cap	=	77	CY
concrete	=	479	CY
Total	=	556	CY
for 7 cells	=	3,893	CY
Tremie concrete	=	65	CY
for 7 cells	=	455	CY
Precast Concrete			
5'x7' beam	=	889	CY
rubbing pl.	=	500	CY
Total	=	1,389	CY
Gravel fill	=	1,989	CY
for 7 cells	=	13,923	CY
Sheet Piling	=	8,552	SF
for 7 cells	=	59,862	SF

Upstream Guidewall Cell, Large

(typical)

Area = 2,124.0 SF

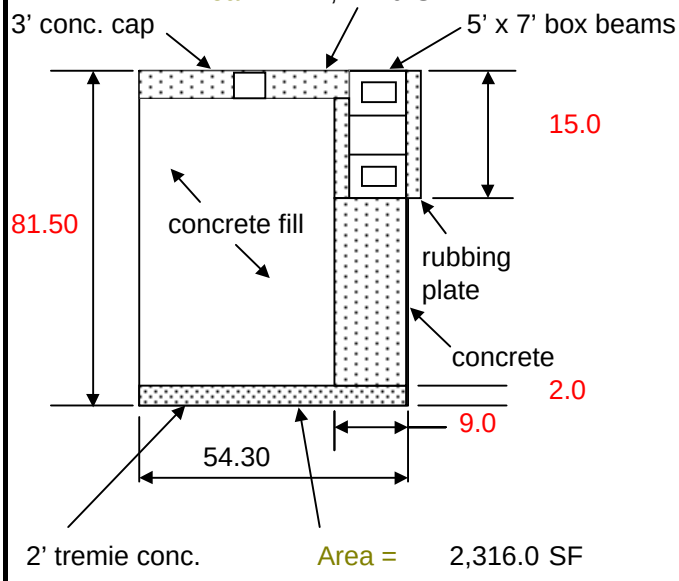

Area = 2,316.0 SF

Note: For quantities change the RED values in the cells of the dimensioned cross section shown.

Cast-in-Place Concrete			
3' conc. cap	=	235	CY
concrete	=	624	CY
Total	=	859	CY
Tremie concrete	=	172	CY
Permanent Cell Fill		6,015	CY
Sheet Piling	=	13,903	SF

LOCK AND DAM NO.18, LOCATION 4, TYPE B,
1200' LOCK ALTERNATIVE (PILE FOUNDED)

Subject	PILE FOUNDED LOCKS: L/D 18 Location 4 Quantities for Type B Lock	Date OCT 1996
Computed by Michael Cummings	Checked	Sheet 6 of 7

Downstream Guidewall Cell, Small

(typical)

Area = 700.0 SF

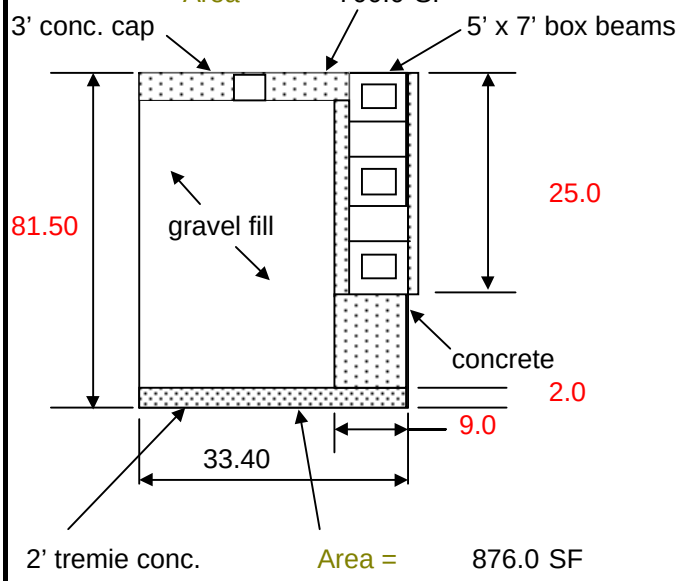

Area = 876.0 SF

Note: For quantities change the RED values in the cells of the dimensioned cross section shown.

Cast-in-Place Concrete			
3' conc. cap	=	77	CY
concrete	=	431	CY
Total	=	508	CY
for 14 cells	=	7,110	CY
Tremie concrete	=	65	CY
for 14 cells	=	910	CY
Precast Concrete			
5'x7' beam	=	2,667	CY
rubbing pl.	=	1,667	CY
Total	=	4,333	CY
Gravel fill	=	1,989	CY
for 14 cells	=	27,846	CY
Sheet Piling	=	8,552	SF
for 14 cells	=	119,724	SF

Downstream Guidewall Cell, Large

(typical)

Area = 2,124.0 SF

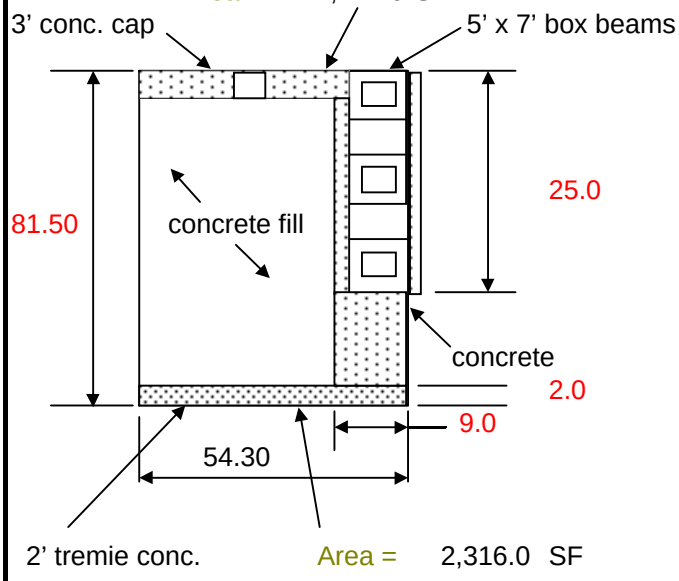

Area = 2,316.0 SF

Note: For quantities change the RED values in the cells of the dimensioned cross section shown.

Cast-in-Place Concrete			
3' conc. cap	=	235	CY
concrete	=	786	CY
Total	=	1,020	CY
Tremie concrete	=	172	CY
Permanent Cell Fill		6,015	CY
Sheet Piling	=	13,903	SF

LOCK AND DAM NO.18, LOCATION 4, TYPE B,
1200' LOCK ALTERNATIVE (PILE FOUNDED)

Subject	PILE FOUNDED LOCKS: L/D 18 Location 4 Quantities for Type B Lock	Date OCT 1996
Computed by Michael Cummings	Checked	Sheet 7 of 7

LOCK GUIDEWALLS :

A. UPSTREAM GUIDEWALL

1. Cast-in-place concrete

Volume = 4,753 CY

2. Precast concrete

Volume = 1,389 CY

3. Gravel Fill

Volume = 13,923 CY

4. Sheet Piling

Area = 73,765 SF

5. Permanent Cell Fill

Volume = 6,015 CY

6. Tremie Concrete

Volume = 627 CY

B. DOWNSTREAM GUIDEWALL

1. Cast-in-place concrete

Volume = 8,131 CY

2. Precast concrete

Volume = 4,333 CY

3. Gravel Fill

Volume = 27,846 CY

4. Sheet Piling

Area = 133,627 SF

5. Permanent Cell Fill

Volume = 6,015 CY

6. Tremie Concrete

Volume = 1,082 CY

Guidewall Summary

Total Cast-in-Place Concrete	12,884	CY
Total Precast Concrete	5,722	CY
Total Gravel Fill	41,769	CY
Total Sheet Piling	207,392	SF
Total Permanent Cell Fill	12,030	CY
Total Tremie Concrete	1,709	CY

LOCK AND DAM NO.18, LOCATION 4, TYPE C,
1200' LOCK ALTERNATIVE (PILE FOUNDED)

ACCOUNT CODE	ITEM	QUANTITY	UNIT	UNIT PRICE ($'s)	AMOUNT ($1,000's)
01.	**LANDS AND DAMAGES**				
	REAL ESTATE	1	JOB	SUM	30
04.	**DAMS**				
	DEMOLITION (TAINTER GATE BAY NO.1)	1	JOB	SUM	1,504
	REPLACEMENT TAINTER GATE	1	JOB	SUM	25,000
	04 DAMS SUBTOTAL				26,504
05.	**LOCKS**				
	SITEWORK				
	MOBILIZATION	1	JOB	SUM	8,000
	DEMOLITION	1	JOB	SUM	1,910
	EXCAVATION	117,700	CY	4.50	530
	BACKFILL	160,000	CY	6.25	1,000
	CAPSTONE	52,660	TN	25.00	1,317
	SCOUR PROTECTION	1	JOB	SUM	2,300
	RIPRAP	143,700	TN	20.00	2,874
	STONE FILL	16,606	TN	15.00	249
	GEOTEXTILE	13,740	SY	6.00	82
	FOUNDATION/LOCK DEWATERING	1	JOB	SUM	3,000
	COFFERDAM REMOVAL	1	JOB	SUM	81
	MARINE FACILITIES, TEMP. MOORING STR.	1	JOB	SUM	3,900
	CONCRETE				
	STRUCTURAL GROUTING	1	JOB	SUM	5,400
	CAST IN PLACE REINFORCED CONCRETE	41,400	CY	217	8,984
	CAST IN PLACE CONNECTIONS	964	CY	725	699
	PRECAST FLOOR SLABS	3,398	CY	150	510
	PRECAST CONCRETE APPROACH WALLS	1,532	CY	400	613
	PRECAST CULVERTS	4,990	CY	600	2,994
	PRECAST RUB PANELS	54,375	SF	40	2,175
	TREMIE CONCRETE, BASE	19,130	CY	165	3,156
	TREMIE CONCRETE, WALLS	4,527	CY	175	792
	STEEL REINFORCEMENT	5,175,000	LB	0.75	3,881
	CELL FILL, GRAVEL	133,944	CY	10	1,339
	METALS				
	SHEET PILING	638,471	SF	25.00	15,962
	SHEET PILE BRACING	1	JOB	SUM	600
	FOUNDATION PILING AND TESTING	1	JOB	SUM	15,000
	STRUCTURAL STEEL (GATES, VALVES, ETC.)	1	JOB	SUM	11,600
	STRUCT. STEEL (MISCELLANEOUS - LADDERS, ETC.)	1	JOB	SUM	3,000
	ELECTRICAL				
	ELECTRICAL SYSTEM		JOB	SUM	4,700
	INSTRUMENTATION	1	JOB	SUM	1,250
	MECHANICAL				
	GATE AND VALVE OPERATING MACHINERY	1	JOB	SUM	2,750
	MECHANICAL SYSTEMS	1	JOB	SUM	3,200
	MISCELLANEOUS	1	JOB	SUM	1,950
	05 LOCKS SUBTOTAL				115,798

LOCK AND DAM NO.18, LOCATION 4, TYPE C,
1200' LOCK ALTERNATIVE (PILE FOUNDED)

05.60.	**GUIDEWALLS**				
	SITEWORK				
	EXCAVATION	118,490	CY	4.5	533
	BACKFILL	73,640	CY	10	736
	SCOUR PROTECTION	211,130	TON	15	3,167
	CONCRETE				
	42" DIAMETER PILES	6,360	LF	400	2,544
	CAST IN PLACE REINFORCED CONCRETE	5,742	CY	150	861
	PRECAST BEAMS	17,325	CY	500	8,663
	PRECAST BEAM SEATS	262	CY	1000	262
	TREMIE CONCRETE	1,709	CY	500	855
	PERMANENT CELL FILL (C0NCRETE)	5,268	CY	200	1,054
	GROUT FOR BEAMS	778	CY	1000	778
	STEEL REINFORCEMENT	2,921,700	LB	0.75	2,191
	GRAVEL FILL	18,291	CY	10	183
	METALS				
	SHEET PILING	97,971	SF	25.00	2,449
	FOUNDATION PILING	1	JOB	SUM	318
	POST TENSIONING	2,030	LF	30	61
	STRUCTURAL STEEL	1	JOB	SUM	4,060
	05.60 GUIDEWALLS SUBTOTAL				28,715
09.	**CHANNEL WORK**	1	JOB	SUM	60
	PROJECT SUBTOTAL				171,107
	CONTINGENCIES 25%				42,777
	PROJECT SUBTOTAL WITH CONTINGENCIES				213,884
30.	**PLANNING, ENGINEERING, AND DESIGN (10%)**				21,000
31.	**CONSTRUCTION MANAGEMENT (10%)**				21,000
	PROJECT TOTAL				$ 256,000

LOCK AND DAM NO.18, LOCATION 4, TYPE C,
1200' LOCK ALTERNATIVE (PILE FOUNDED)

Subject	PILE FOUNDED LOCKS: 1200 ft lock L/D 18 Location 4 Quantities for Type C Lock	Date OCT 1996
Computed by Michael Cummings	Checked	Sheet 1 of 7

Gate Monolith
(typical)

Note: For quantities change the RED values in the cells of the dimensioned cross section shown.

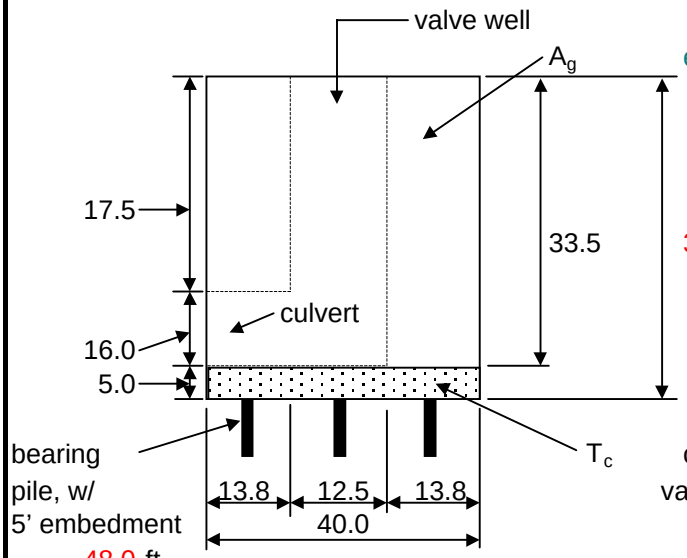

Cast in place concrete

A_g =	15,155.6	CY	U.S.
A_g =	18,292.6	CY	D.S.
Total =	33,448.1	CY	

Tremie concrete

T_c = 10,203.7 CY

The culverts are subtracted gross volume

	width	length	heighth	
culvert =	12.5	16.0	50.0	CF
valve well =	12.5	16.0	13.8	CF

48.0 ft

US gates length = 137.0 ft DS gates length = 164.5 ft

hght chk =	38.50	left
hght chk =	38.50	right

Lock Wall

Note: For quantities change the RED values in the cells of the dimensioned cross section

area= 1,658.0 SF

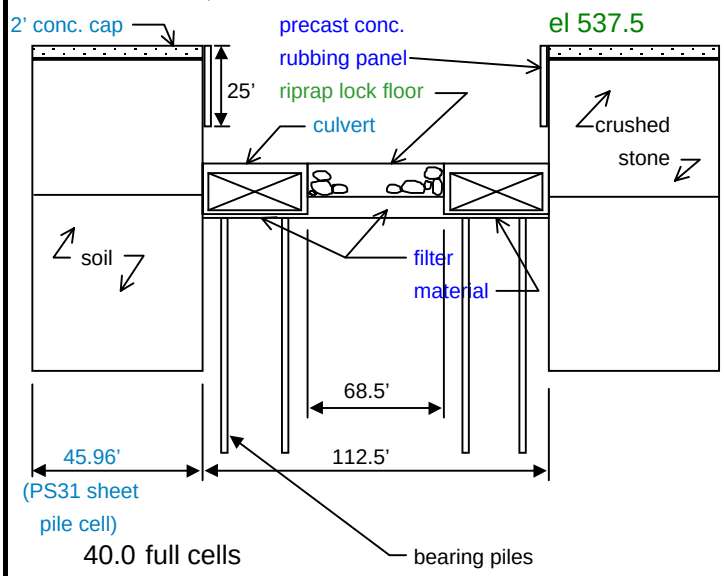

Cast-in-place concrete
2' concrete cap
Volume= 1,706.2 CY
Pre-cast concrete
precast rubbing panel
Area= 54,350.0 SF
Sheet pile cells
sheet piling
Area= 638,471.0 SF
Sheet pile cell fill
gravel
Volume= 133,944 CY

40.0 full cells
4.0 half cells
42.0 filler cells

78.0 ft total length 48.0 ft

RS Wall = 1,087.5 ft LS Wall = 1,087.5 ft

hght chk =	.00	left
hght chk =	.00	right

L184cp

LOCK AND DAM NO.18, LOCATION 4, TYPE C,
1200' LOCK ALTERNATIVE (PILE FOUNDED)

Subject	PILE FOUNDED LOCKS: 1200 ft lock L/D 18 Location 4 Quantities for Type C Lock	Date OCT 1996
Computed by Michael Cummings	Checked	Sheet 2 of 7

Floor

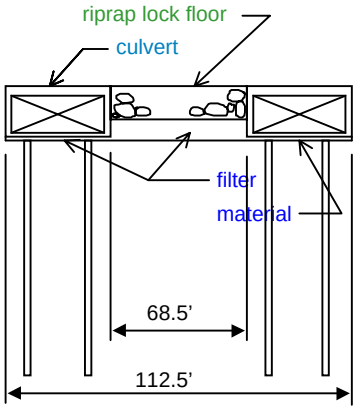

Riprap floor quantity
Volume= 11,956.7 CY
or 16,739.3 TONS

Filter material quantity
Volume= 12,932.1 CY
or 18,105.0 TONS

Bearing piles
precast floor slabs= 4,665.6 LF
precast culvert= 17,625.6 LF
Total Bearing Pile 22,291.2 LF

Length of floor = 1,270.0 ft width of floor = 73.0 ft

Note: For quantities change the RED values in the cells of the dimensioned cross section shown.

US Wall = 994.0 ft DS Wall = 1,016.0 ft

LOCK AND DAM NO.18, LOCATION 4, TYPE C,
1200' LOCK ALTERNATIVE (PILE FOUNDED)

Subject	PILE FOUNDED LOCKS: 1200 ft lock L/D 18 Location 4 Quantities for Type C Lock	Date OCT 1996
Computed by Michael Cummings	Checked	Sheet 3 of 7

cofferdam cell
typical
Area = 1,963.0 ft^2

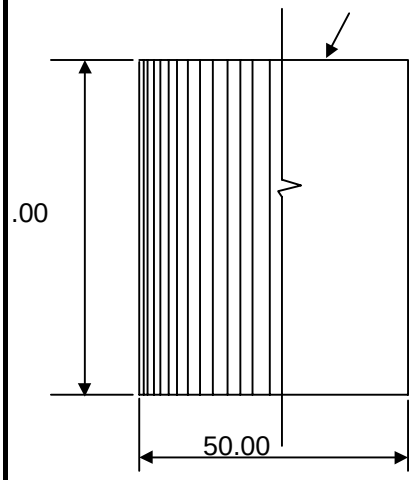

Note: For quantities change the RED values in the cells of the dimensioned cross section shown.

Pile type: PS31
Choose PSA23, PS27.5, or PS31

Area between cells:

Area =	855.0	SF
Distance =	15.91	ft
Length =	1.641	ft
Number in cell =	96	piles
No. in space =	21	piles

UPSTREAM

North or South length:	264.0	.4	modular numbers
East or West length:	330.0	.5	to aid in value search

DOWNSTREAM

North or South length:	264.0	.4	modular numbers
East or West length:	330.0	.5	to aid in value search

US	Total number of cells:	9.0	DS	Total number of cells:	9.0
US	Total number of cells:	11.0	DS	Total number of cells:	11.0

LOCK CHAMBER WALLS:

A. WALL MONOLITHS

1. River side walls
(a) Cast in place concrete
Volume = #REF! CY
(b) Tremie concrete
Volume = ######## CY
(c) Pre-cast concrete
Volume = .0 CY
(d) Pre-cast concrete (approach wall)
Volume = 0.0 CY
(e) Tremie concrete (approach wall)
Volume = - CY

1. Land side walls
(a) Cast in place concrete
Volume = #REF! CY
(b) Tremie concrete
Volume = ######## CY
(c) Pre-cast concrete
Volume = .0 CY
(d) Pre-cast concrete (approach wall)
Volume = 0.0 CY
(e) Tremie concrete (approach wall)
Volume = - CY

B. GATE MONOLITHS

1. Upstream cast in place concrete
Volume = 15,155.6 CY
Piles = 2900 LF

1. Downstream cast in place concrete
Volume = 18,292.6 CY
Piles = 3300 LF

LOCK AND DAM NO.18, LOCATION 4, TYPE C,
1200' LOCK ALTERNATIVE (PILE FOUNDED)

Subject	PILE FOUNDED LOCKS: 1200 ft lock L/D 18 Location 4 Quantities for Type C Lock	Date OCT 1996
Computed by Michael Cummings	Checked	Sheet 4 of 7

SILLS:

Length = 120.0 ft **Volume =** 7,893.0 CY of CIP concrete
111.0 ft
8.0 ft

COFFERDAM CELLS:

Upstream riverside
Total = piles
Total = SF of piling

Downstream riverside
Total = piles
Total = SF of piling

SUMMARY:

Lockwalls:

CONCRETE (Precast)
A. Lockwalls = - CY
B. Approach walls = - CY **Total =** - CY

CONCRETE (CIP, Cast in place)
A. Lockwalls = CY
B. Gate mono's = 33,448.1 CY
C. Sills = 7,893.0 CY **Total =** 41,400.0 CY

CONCRETE (Tremie)
A. Lockwalls = ########
B. Approach walls = - **Total =** ######## CY

HP PILING **Total =** .0 LF

BEARING PILES:
Total = 110,600.0 LF

Lock Floor:

CONCRETE:
A. Tremie concrete = .0 CY
B. Precast = .0 CY

BEARING PILES:
Total = 22,291.2 LF

Lockwall Sheet Pile Cells:

A. SHEETPILES
Total Area = 638,471 SF

B. FILL
Total Volume = 133,944 CY

LOCK AND DAM NO.18, LOCATION 4, TYPE C,
1200' LOCK ALTERNATIVE (PILE FOUNDED)

Subject	PILE FOUNDED LOCKS: L/D 18 Location 4 Quantities for Type C Lock	Date OCT 1996
Computed by Michael Cummings	Checked	Sheet 5 of 7

Upstream Guidewall Cell, Small

(typical)

Area = 700.0 SF

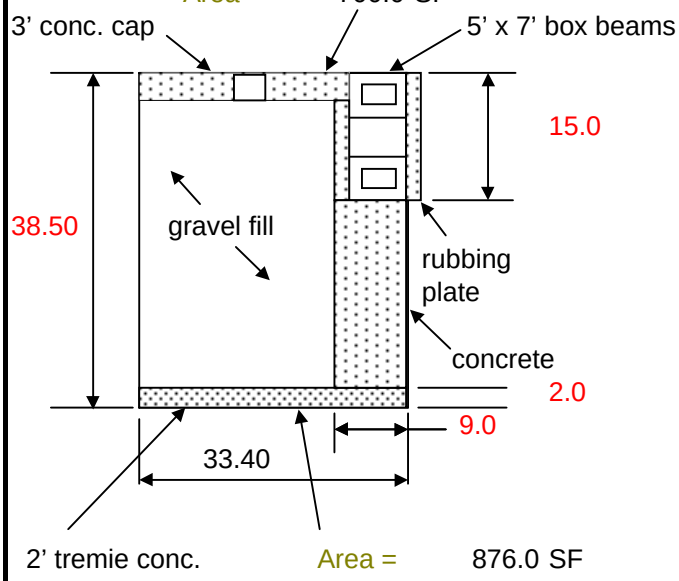

Area = 876.0 SF

Note: For quantities change the RED values in the cells of the dimensioned cross section shown.

Cast-in-Place Concrete			
3' conc. cap	=	77	CY
concrete	=	177	CY
Total	=	254	CY
for 7 cells	=	1,779	CY
Tremie concrete	=	65	CY
for 7 cells	=	455	CY
Precast Concrete			
5'x7' beam	=	889	CY
rubbing pl.	=	500	CY
Total	=	1,389	CY
Gravel fill	=	871	CY
for 7 cells	=	6,097	CY
Sheet Piling	=	4,040	SF
for 7 cells	=	28,278	SF

Upstream Guidewall Cell, Large

(typical)

Area = 2,124.0 SF

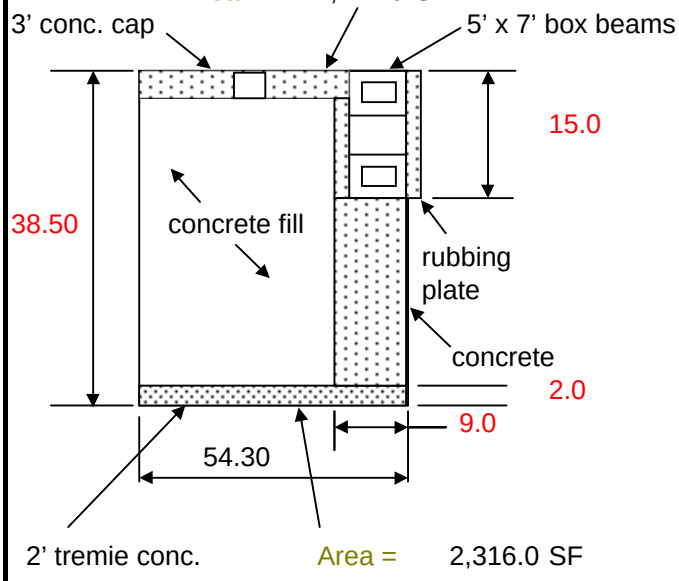

Area = 2,316.0 SF

Note: For quantities change the RED values in the cells of the dimensioned cross section shown.

Cast-in-Place Concrete			
3' conc. cap	=	235	CY
concrete	=	226	CY
Total	=	461	CY
Tremie concrete	=	172	CY
Permanent Cell Fill		2,634	CY
Sheet Piling	=	6,568	SF

LOCK AND DAM NO.18, LOCATION 4, TYPE C,
1200' LOCK ALTERNATIVE (PILE FOUNDED)

Subject	PILE FOUNDED LOCKS: L/D 18 Location 4 Quantities for Type C Lock	Date OCT 1996
Computed by Michael Cummings	Checked	Sheet 6 of 7

Downstream Guidewall Cell, Small

(typical)

Area = 700.0 SF

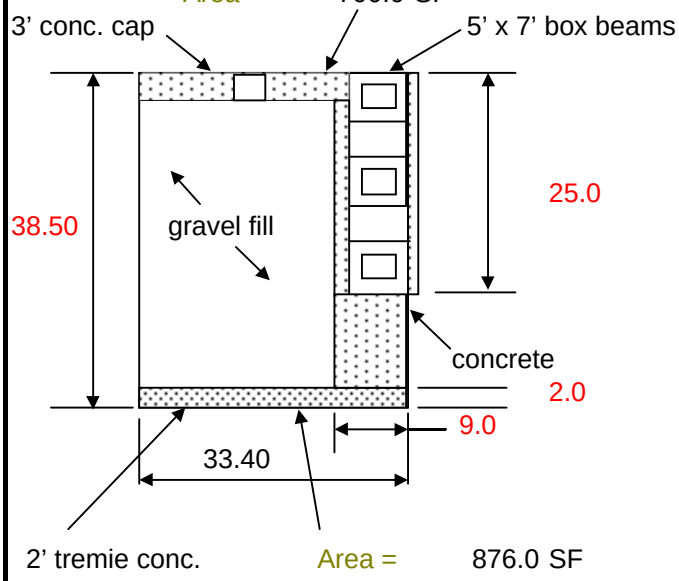

Area = 876.0 SF

Note: For quantities change the RED values in the cells of the dimensioned cross section shown.

Cast-in-Place Concrete

3' conc. cap	=	77	CY
concrete	=	129	CY
Total	=	206	CY
for 14 cells	=	2,881	CY
Tremie concrete	=	65	CY
for 14 cells	=	910	CY
Precast Concrete			
5'x7' beam	=	2,667	CY
rubbing pl.	=	1,667	CY
Total	=	4,333	CY
Gravel fill	=	871	CY
for 14 cells	=	12,194	CY
Sheet Piling	=	4,040	SF
for 14 cells	=	56,557	SF

Downstream Guidewall Cell, Large

(typical)

Area = 2,124.0 SF

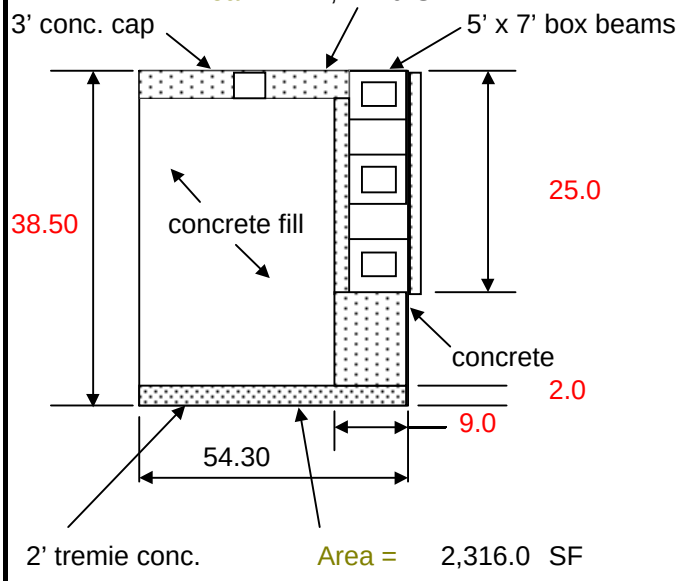

Area = 2,316.0 SF

Note: For quantities change the RED values in the cells of the dimensioned cross section shown.

Cast-in-Place Concrete

3' conc. cap	=	235	CY
concrete	=	387	CY
Total	=	622	CY
Tremie concrete	=	172	CY
Permanent Cell Fill		2,634	CY
Sheet Piling	=	6,568	SF

LOCK AND DAM NO.18, LOCATION 4, TYPE C,
1200' LOCK ALTERNATIVE (PILE FOUNDED)

Subject	PILE FOUNDED LOCKS: L/D 18 Location 4 Quantities for Type C Lock	Date OCT 1996
Computed by Michael Cummings	Checked	Sheet 7 of 7

LOCK GUIDEWALLS :

A. UPSTREAM GUIDEWALL

1. Cast-in-place concrete

Volume = 2,239 CY

2. Precast concrete

Volume = 1,389 CY

3. Gravel Fill

Volume = 6,097 CY

4. Sheet Piling

Area = 34,846 SF

5. Permanent Cell Fill

Volume = 2,634 CY

6. Tremie Concrete

Volume = 627 CY

B. DOWNSTREAM GUIDEWALL

1. Cast-in-place concrete

Volume = 3,502 CY

2. Precast concrete

Volume = 4,333 CY

3. Gravel Fill

Volume = 12,194 CY

4. Sheet Piling

Area = 63,124 SF

5. Permanent Cell Fill

Volume = 2,634 CY

6. Tremie Concrete

Volume = 1,082 CY

Guidewall Summary

Total Cast-in-Place Concrete	5,742	CY
Total Precast Concrete	5,722	CY
Total Gravel Fill	18,291	CY
Total Sheet Piling	97,971	SF
Total Permanent Cell Fill	5,268	CY
Total Tremie Concrete	1,709	CY

LD 17 Loc 1

ACCOUNT CODE	ITEM	QUANTITY	UNIT	UNIT PRICE ($'s)	AMOUNT ($1,000's)
01.	LANDS AND DAMAGES				
	REAL ESTATE	1	JOB	SUM	260
02.	RELOCATION	1	JOB	SUM	0
04.	DAMS				0
05.	LOCKS				
	SITEWORK				
	MOBILIZATION	1	JOB	SUM	8,000
	DEMOLITION	1	JOB	SUM	500
	EXCAVATION/ DREDGING	490,000	CY	5.50	2,695
	BACKFILL	205,300	CY	6.25	1,283
	ROCK EXCAVATION	0	CY	45.00	0
	SCOUR PROTECTION	27,100	TN	15.00	407
	FOUNDATION DEWATERING	1	JOB	SUM	200
	CONCRETE				
	CAST IN PLACE REINFORCED CONCRETE	69,800	CY	280.00	19,544
	PRECAST CONCRETE WALL PANELS	2,013	CY	400.00	805
	PRECAST CONCRETE CULVERT	5,480	CY	700.00	3,836
	METALS				
	TIES, ANCHOR	1,100	EA	2,500.00	2,750
	SHEETPILING - TEMPORARY (FOR DEWATERING)	50,000	SF	25.00	1,250
	SHEETPILING - PERMANENT (PS 31)	163,100	SF	30.00	4,893
	SHEETPILING - PERMANENT (PZ 27)	43,500	SF	30.00	1,305
	STRUCTURAL STEEL (GATES, VALVES, TRASHRACKS, OTHER)	1	JOB	SUM	3,200
	STRUCTURAL STEEL (MISCELLANEOUS - LADDERS, ETC.)	1	JOB	SUM	3,000
	HP 14X117 PILING	93,200	LF	50.00	4,660
	ELECTRICAL				
	ELECTRICAL SYSTEM	1	JOB	SUM	4,700
	INSTRUMENTATION	1	JOB	SUM	1,000
	MECHANICAL				
	GATE AND VALVE OPERATING MACHINERY	1	JOB	SUM	2,053
	MECHANICAL SYSTEMS	1	JOB	SUM	3,100
	MISCELLANEOUS	1	JOB	SUM	6,918
	05 LOCKS SUBTOTAL				76,099
05.60.	GUIDEWALLS				
	CONCRETE				
	CAST IN PLACE REINFORCED CONCRETE	2,300	CY	280.00	644
	PRECAST CONCRETE (PRESTRESSED)	6,000	LF	1,170.00	7,020
	PRECAST CONCRETE (W/REINFORCEMENT)	3,000	CY	400.00	1,200
	TREMIE CONCRETE (WITH REINFORCEMENT)	15,200	CY	210.00	3,192
	GRAVEL FILL	29,600	CY	15.00	444
	METALS				
	SHEETPILING FOR CELLS (PS31)	185,400	SF	25.00	4,635
	SHEETPILE RETAINING WALL (PZ35) - DOWNSTREAM	32,800	SF	30.00	984
	STRUCTURAL STEEL	1	JOB	SUM	3,811
	05.60 GUIDEWALLS SUBTOTAL				21,930
09.	CHANNEL WORK	1	JOB	SUM	9,600
	PROJECT SUBTOTAL				107,889
	CONTINGENCIES (25%)				26,972
	PROJECT SUBTOTAL WITH CONTINGENCIES				134,861
30.	PLANNING, ENGINEERING, AND DESIGN (10%)				14,000
31.	CONSTRUCTION MANAGEMENT (10%)				14,000
	PROJECT TOTAL				162,861

TOTAL BASIC LOCK COST (O4., 05., 05.60.) WITH CONTINGENCIES, PED, & CM* **$ 163,000**

*(EXCLUDES REAL ESTATE, RELOCATION, AND CHANNEL WORK WHICH ARE MORE SITE-SPECIFIC.)

Subject	PILE FOUNDED LOCKS 1200 ft locks Location 1 Quantities for Type C Lock, L/D 17 L/D	Date 11-Feb-97
Computed by Hans Drehsler	Checked David R. Wehrley	Sheet of 1 6

DS Gate Monolith

Landside **Riverside**

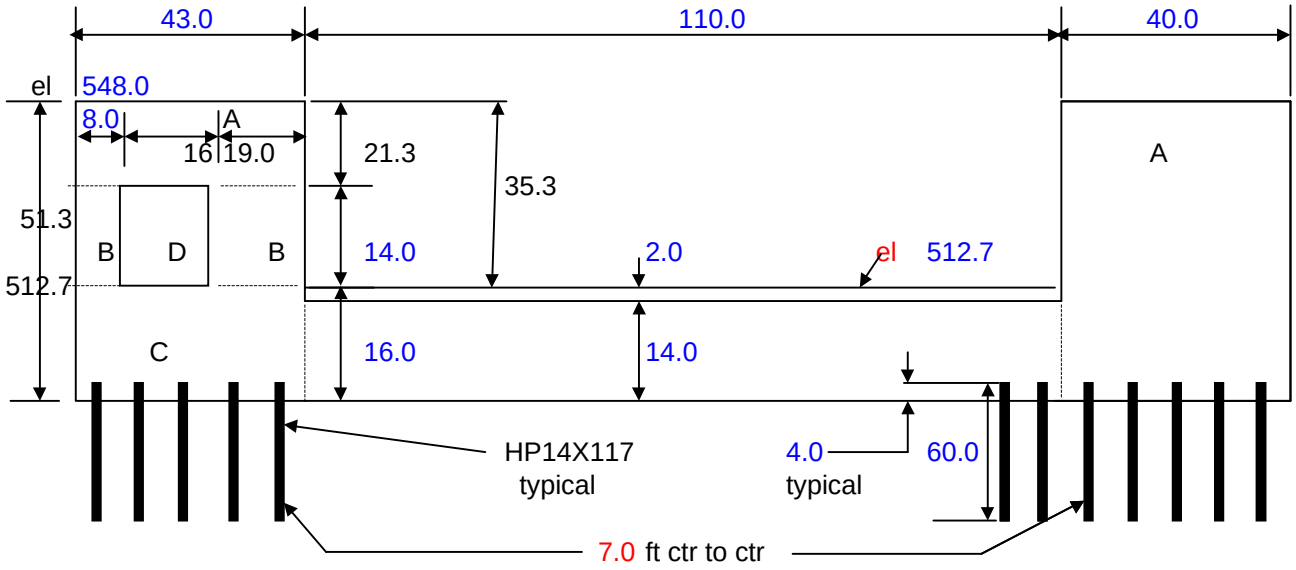

DS length = 165.0 ft

Gate monolith with culvert

DS Cast in place concrete

A =	916	SF	
B =	378	SF	
C =	688	SF	
D =	224	SF	CULVERT
Total =	1,982	SF	

Gate monolith without culvert

DS Cast in place concrete

A =	2,052	SF
Total =	2,052	SF

Linear Feet of H-Piling

Total = 38,994 LF

Subject	PILE FOUNDED LOCKS 1200 ft locks Location 1 Quantities for Type C Lock, L/D 17 L/D 0	Date 11-Feb-97
Computed by Hans Drehsler	Checked David R. Wehrley	Sheet of 2 6

US Gate Monolith

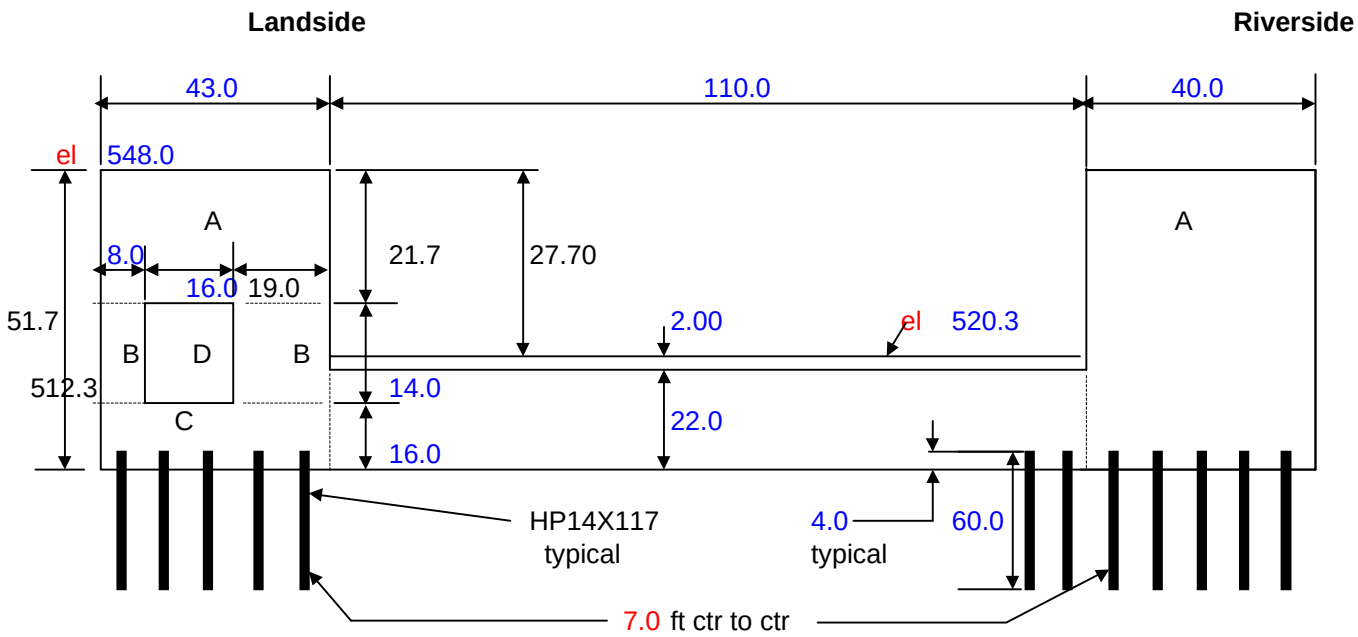

US length = 137.0 ft

Gate monolith with culvert

US Cast in place concrete

A =	933	SF	
B =	378	SF	
C =	688	SF	
D =	224	SF	CULVERT
Total =	1,999	SF	

Gate monolith without culvert

US Cast in place concrete

A =	2,068	SF
Total =	2,068	SF

Linear Feet of H-Piling

Total = 32,377 LF

Subject	PILE FOUNDED LOCKS 1200 ft locks Location 1 Quantities for Type C Lock, L/D 17 L/D	Date 11-Feb-97
Computed by Hans Drehsler	Checked David R. Wehrley	Sheet of 3 6

Box fill / empty culvert, one only

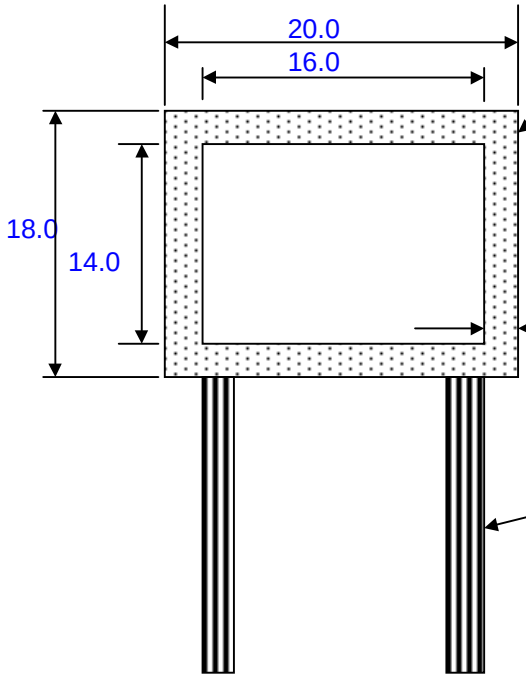

Pre cast concrete culvert

A = 136.0 SF

Total = 136.0 SF

Length of culvert = 1,088 ft, landside only

Total = 435 piles

2.0
typical

Total = 21,760 LF

HP 14X117
50.0 ft long
5.0 ft ctr to ctr along horizontal axis

Sheet piling for lock walls
PZ40 piling, typical

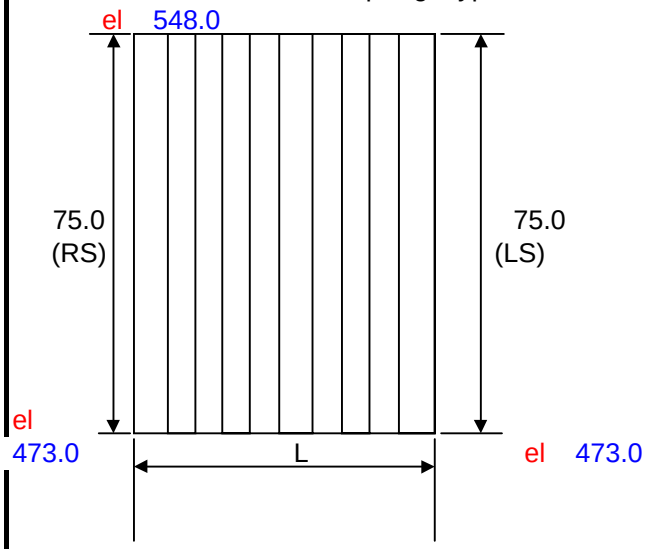

Pile type: PS31
Choose, PSA23, PS27.5, or PS31

Length = 1.64 ft

LS number of sheet piles = 663 piles

RS number of sheet piles = 663 piles

LS sheet piling = 81,525 SF

RS sheet piling = 81,525 SF

L = **LS** lngth = 1,087.0 ft

L = **RS** lngth = 1,087.0 ft

Subject	PILE FOUNDED LOCKS 1200 ft locks Location 1 Quantities for Type C Lock, L/D 17 L/D	Date 11-Feb-97
Computed by Hans Drehsler	Checked David R. Wehrley	Sheet of 4 6

Tiebacks, typical

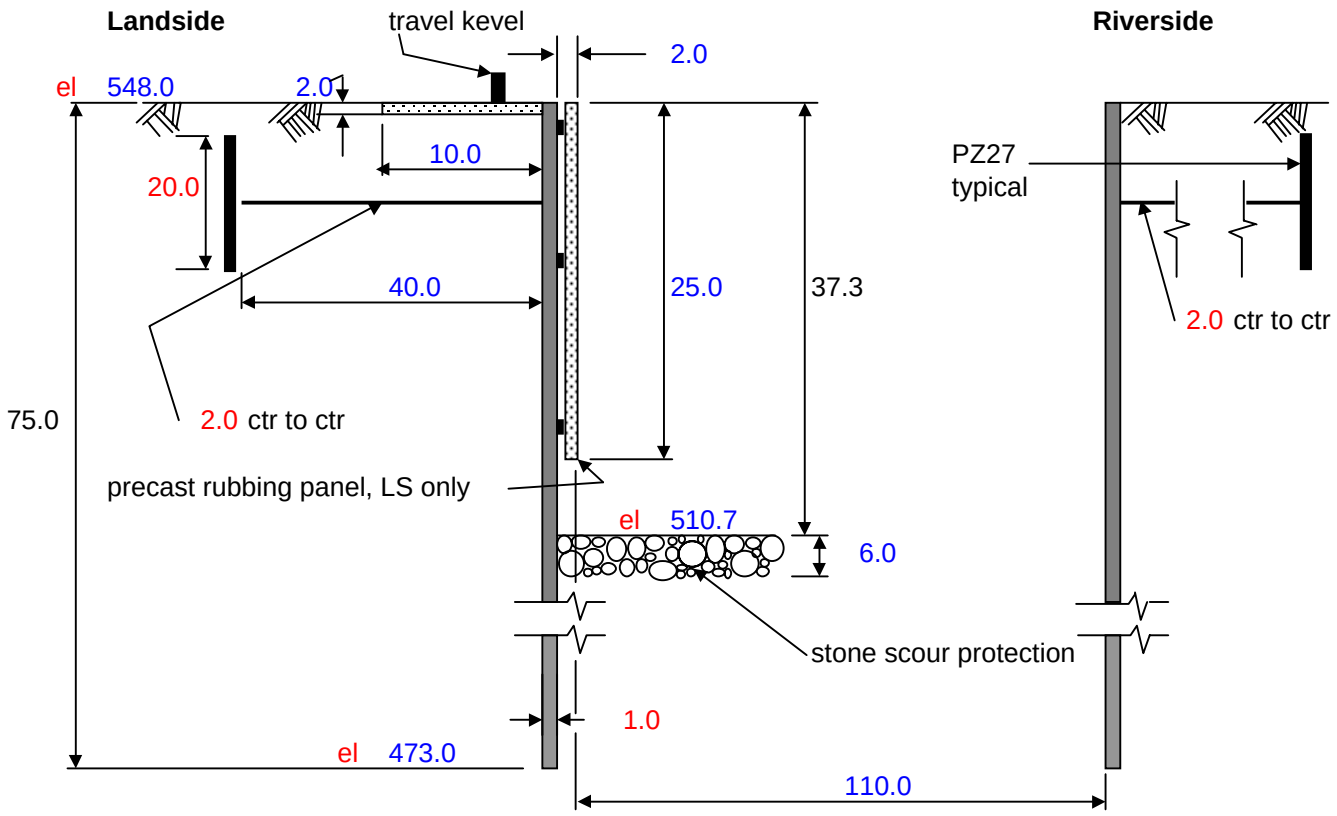

Tiebacks

LS = 544 ties, LF = 21,740
RS = 544 ties, LF = 21,740

PZ27 Sheetpile Anchor for the tiebacks

LS = 21,740 SF
RS = 21,740 SF

Rubbing Panel

Precast concrete = 54,350 CF

Travel Kevel Slab

CIP = 21,740 CF of kevel slab concrete

Chamber Floor

scour stones = 730,464 CF, in chamber floor

Excavation & Fill

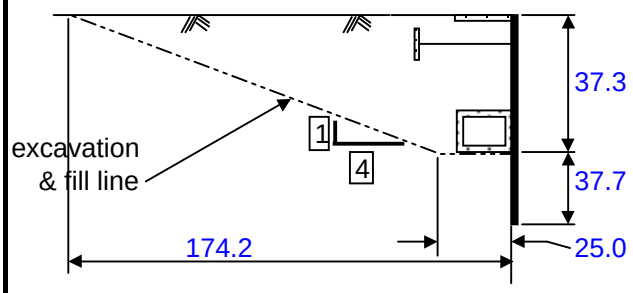

Excavation:

Outside Chamber = 191,120 CY
Inside Chamber = 297,000 CY
Total = 488,120 CY

Fill:

Total = 205,295 CY (Includes compaction factor)

Subject	PILE FOUNDED LOCKS 1200 ft locks Location 1 Quantities for Type C Lock, L/D 17 L/D	Date 11-Feb-97
Computed by Hans Drehsler	Checked David R. Wehrley	Sheet of 5 6

LOCK CHAMBER WALLS:

A. WALL MONOLITHS

1. Land side walls

(a) PZ40 Sheet piling

Total = 81,525 SF

(c) Cast in place concrete, (travel kevel slab)

Total = 805 CY

(d) Precast concrete, (culvert)

Total = 5,480 CY

(e) Precast concrete, (panels)

Total = 2,013 CY

(e) PZ27 sheet pile tieback anchor

Total = 21,740 CY

(f) Ties

Total = 544

1. River side walls

(a) PZ40 Sheet piling

Total = 81,525 SF

(b) PZ27 sheet pile tieback anchor

Total = 21,740 SF

(c) Ties

Total = 544

B. GATE MONOLITHS

1. **Upstream** cast in place concrete

Volume = 20,637 CY

2. Floor slab between the monoliths

Volume = 12,279 CY

1. **Downstream** cast in place concrete

Volume = 24,652 CY

2. Floor slab between the monoliths

Volume = 9,411 CY

SILLS:

Length = 120.0 ft

Width = 111.0 ft

Height = 2.0 ft **Volume =** 1,973 CY of CIP concrete

Subject	PILE FOUNDED LOCKS 1200 ft locks Location 1 Quantities for Type C Lock, L/D 17 L/D	Date 11-Feb-97
Computed by Hans Drehsler	Checked David R. Wehrley	Sheet 6 of 6

SUMMARY:

1. CONCRETE (CIP, Cast in place)

Total = 69,800 CY

2. CONCRETE, Precast

Total = 7,500 CY

3. TIES

Total = 1,100.0

Total = 43,500 LF

4. SHEET PILES, PS31

Total = 163,100 SF

4A. SHEET PILES, PZ27

Total = 43,500 SF

5. HP PILES, HP14X117

Total = 1,630 piles

Total = 93,200 LF

6. SCOUR STONE

Total = 27,100 CY

7. FILL FOR CULVERT PLACEMENT

Total = 205,300 CY

8. TEMPORARY SHEET PILE

Total = 50,000 SF

9. EXCAVATION

Total = 490,000 CY

LOCK AND DAM NO. 17, LOCATION 2, TYPE B
(PILE-FOUNDED)

CCOUNT CODE	ITEM	QUANTITY	UNIT	UNIT PRICE ($'s)	AMOUNT ($1,000's)
01.	**LANDS AND DAMAGES**				
	REAL ESTATE	1	JOB	SUM	146
04.	**DAMS**				
	04 DAMS SUBTOTAL				0
05.	**LOCKS**				
	SITEWORK				
	MOBILIZATION	1	JOB	SUM	10,650
	DEMOLITION	1	JOB	SUM	1,910
	EXCAVATION	27,090	CY	4.5	122
	BACKFILL	22,000	CY	6.25	138
	WALL FILL	7,992	CY	10.00	80
	SCOUR PROTECTION	429	TN	20.00	9
	SCOUR STONE IN LOCK FLOOR	9,030	TN	25.00	226
	FOUNDATION/LOCK DEWATERING	1	JOB	SUM	3,000
	MARINE FACILITIES, TEMP. MOORING STR.	1	JOB	SUM	3,900
	CONCRETE				
	UNDERBASE GROUTING	5,297	CY	200	1,059
	CAST IN PLACE REINFORCED CONCRETE	35,662	CY	217	7,739
	PRECAST CONCRETE	8,780	CY	400	3,512
	TREMIE CONCRETE	5,651	CY	165	932
	POST TENSION STEEL	135,000	LB	2.5	338
	FURNISH AND SET LANDING PADS	74	EA	19000	1,406
	SET PRECAST WALL UNITS	28	EA	16000	448
	FLOAT IN AND SET FLOOR UNITS	26	EA	16000	416
	FLOAT IN AND SET MITER GATE SILL	1	JOB	SUM	140
	STEEL REINFORCEMENT	2,140,000	LB	0.75	1,605
	METALS				
	SHEET PILING	54,110	SF	21.52	1,164
	WALL UNIT BRACING	1	JOB	SUM	250
	FOUNDATION PILING AND TESTING	1	JOB	SUM	5,300
	STRUCTURAL STEEL (GATES, VALVES, TRASHRACKS, B	1	JOB	SUM	11,613
	STRUCTURAL STEEL (MISCELLANEOUS - LADDERS, ET	1	JOB	SUM	3,040
	ELECTRICAL				
	ELECTRICAL SYSTEM	1	JOB	SUM	4,700
	INSTRUMENTATION	1	JOB	SUM	1,250
	MECHANICAL				
	GATE AND VALVE OPERATING MACHINERY	1	JOB	SUM	2,750
	MECHANICAL SYSTEMS	1	JOB	SUM	3,200
	MISCELLANEOUS	1	JOB	SUM	1,950
	05 LOCKS SUBTOTAL				72,846
05.60.	**GUIDEWALLS**				
	SITEWORK				
	EXCAVATION	118,490	CY	4.5	533
	BACKFILL	73,640	CY	10	736
	SCOUR PROTECTION	18,900	TON	15	284
	CONCRETE				
	42" DIAMETER PILES	2,940	LF	400	1,176
	CAST IN PLACE REINFORCED CONCRETE	1,570	CY	150	236
	PRECAST BEAMS	10,900	CY	500	5,450
	PRECAST BEAM SEATS	165	CY	1000	165
	TREMIE CONCRETE	130	CY	500	65
	PERMANENT CELL FILL (C0NCRETE)	14,235	CY	200	2,847
	GROUT FOR BEAMS	490	CY	1000	490
	STEEL REINFORCEMENT	1,840,000	LB	0.75	1,380
	GRAVEL FILL	27,993	CY	10	280
	METALS				
	SHEET PILING FOR CELLS (PS31)	177,876	SF	25.00	4,447
	SHEET PILE RETAINING WALL (PZ40)	118,406	SF	30.00	3,552
	FOUNDATION PILING		JOB	SUM	318
	POST TENSIONING	1,280	LF	30	38
	STRUCTURAL STEEL	1	JOB	SUM	4,060
	05.60 GUIDEWALLS SUBTOTAL				26,057
09.	**CHANNEL WORK**	1	JOB	SUM	4,446
11.	**LEVEES**	1	JOB	SUM	1,507
	PROJECT SUBTOTAL				105,002
	CONTINGENCIES 25%				26,251
	PROJECT SUBTOTAL WITH CONTINGENCIES				131,000
30.	**PLANNING, ENGINEERING, AND DESIGN (10%)**				13,000
31.	**CONSTRUCTION MANAGEMENT (10%)**				13,000
	PROJECT TOTAL				$ 157,000

		QUANTITY CALCULATIONS									
	L/D 17 Location 2, Type B, Pile Founded							Sheet 1_ of 3____			
1	Remove existing sill down to										
	elev. 405.33	25	x	2	x	110	=	5,500.00	CF	203.70	CY
2	Remove existing 2' thick slab	95.25	x	2	x	110	=	20,955.00	CF	776.11	CY
3	Demolish existing guidewall, to										
	include timber crib and pile	502	x	30	x	53	=	798,180.00	CF	29,562.22	CY
4	Install sheet piling, PZ27	40.2	x	673	x	2	=	54,109.20	SF		
5	Excavation	6.3	x	172		675	=	731,430.00	CF	27,090.00	CY
6	Place scour stone	1.5	x	172	x	675	=	174,150.00	CF	6,450.00	CY
7	Place scour protection (riprap)	3	x	25	x	110	=	8,250.00	CF	305.56	CY
8	Install piling, HP 14 x 89										
	(54 ea per monolith @ 50' long										
	for 28 monoliths)	54	x	50	x	28	=	75,600.00	LF		
	Lockwall/floor connection										
9	HP14 x 117 stud w/welded ribs	23	x	2	=	46	EA				
	thixotropic grout @ HP studs	23.5	x	46	=	1,081.00	CF				
	thixotropic grout @ joints per ft	0.25	x	5	x	1296	=	1,620.00	CF		
10	Grout under base filling	2	x	650	x	110	=	143,000.00	CF	5,296.30	CY
11	Install piling, HP 14 x 89										
	(5 ea per floor unit @ 45' long										
	for 26 floor units	5	x	45	x	26	=	5,850.00	LF		
							=	26	EA		
12	Sand infill of floor units, large	((9.25' x 6.25' x2)+(19.75' x 6.25' x 4))x 510'					=	310,794.00	CF		
	" " " " " , small	((9.25' x 3' x 2)+(19.75' x 3' x 4)) x 66					=	19,305.00	CF		
								330,099.00	CF	12,225.89	CY
13	Concrete										
	riverward wall										
	-bottom lift (tremie)	5.5	x	23	x	603	=	76,279.50	CF		
	-2nd lift (reinforced)	4	x	28	x	603	=	67,536.00	CF		
	-3rd lift (reinforced)inside	14	x	7.75	x	603	=	65,425.50	CF		
	- " " " outside	14	x	7.75	x	603	=	65,425.50	CF		
	-4th lift (reinforced)	8.0	x	26	x	603	=	125,424.00	CF		
	-5th lift (reinforced)	4.0	x	28	x	603	=	67,536.00	CF		
	-6th lift (reinforced)outside	5.30	x	9	x	603	=	28,763.10	CF		
	- " " " inside	5.30	x	9	x	603	=	28,763.10	CF		
	-7th lift (reinforced)outside	6.0	x	9	x	603	=	32,562.00	CF		
								557,714.70		20,656.10	CY
14	Concrete										
	landward wall										
	-bottom lift (tremie)	5.5	x	23	x	603	=	76,279.50	CF		
	-2nd lift (reinforced)	4	x	28	x	603	=	67,536.00	CF		
	-3rd lift (reinforced)inside	14	x	7.75	x	603	=	65,425.50	CF		
	- " " " outside	14	x	7.75	x	603	=	65,425.50	CF		
	-4th lift (reinforced)	8.0	x	26	x	603	=	125,424.00	CF		
	-5th lift (reinforced)	4.0	x	28	x	603	=	67,536.00	CF		
	-6th lift (reinforced)outside	5.30	x	9	x	603	=	28,763.10	CF		
	- " " " inside	5.30	x	9	x	603	=	28,763.10	CF		
	-7th lift (reinforced)outside	6.0	x	9	x	603	=	32,562.00	CF		
								557,714.70		20,656.10	CY
	Total Concrete									41,312.20	CY
											Ld172bpf

LOCK AND DAM NO. 17, LOCATION 3, TYPE B
1200' LOCK ALTERNATIVE (ROCK FOUNDED)

ACCOUNT CODE	ITEM	QUANTITY	UNIT	UNIT PRICE ($'s)	AMOUNT ($1,000's)
01.	**LANDS AND DAMAGES**				
	REAL ESTATE	1	JOB	SUM	146
04.	**DAMS**				
	REMOVAL OF EXISTING STRUCTURES	1	JOB	SUM	150
	04 DAMS SUBTOTAL				150
05.	**LOCKS**				
	SITEWORK				
	MOBILIZATION	1	JOB	SUM	10,650
	DEMOLITION	1	JOB	SUM	1,910
	EXCAVATION	48,960	CY	6.25	306
	FOUNDATION FILL AT SCOUR HOLE	0	CY	18.75	0
	WALL FILL	15,760	CY	10.00	158
	CAPSTONE	52,660	TN	25.00	1,317
	RIPRAP	33,380	TN	20.00	668
	LEVELING STONE IN LOCK FLOOR	4,580	TN	15.00	69
	GRAVEL FILTER IN LOCK FLOOR	16,606	TN	15.00	249
	GEOTEXTILE	13,740	SY	6.00	82
	FOUNDATION/LOCK DEWATERING	1	JOB	SUM	3,000
	MARINE FACILITIES, TEMP. MOORING STR.	1	JOB	SUM	3,900
	CONCRETE				
	STRUCTURAL GROUTING	450	CY	200	90
	CAST IN PLACE REINFORCED CONCRETE	63,600	CY	217	13,801
	CAST IN PLACE CONNECTIONS	964	CY	725	699
	PRECAST CONCRETE	9,700	CY	400	3,880
	TREMIE CONCRETE, BASE .	10,340	CY	165	1,706
	PRECAST FLOOR PAVERS AND STRUTS	15,450	CY	286	4,419
	SET PRECAST FLOOR BEAMS	31	EA	16000	496
	SET FLOOR PANELS	62	EA	10000	620
	STEEL REINFORCEMENT	7,614,000	LB	0.75	5,711
	METALS				
	SHEET PILING	31,700	SF	35.80	1,135
	SHEET PILE BRACING	1	JOB	SUM	350
	FOUNDATION PILING AND TESTING	209,190	LF	39.75	8,315
	STRUCTURAL STEEL (GATES, VALVES, ETC.)	1	JOB	SUM	11,613
	STRUCTURAL STEEL (MISCELLANEOUS - LADDERS, ETC.)	1	JOB	SUM	3,040
	ELECTRICAL				
	ELECTRICAL SYSTEM		JOB	SUM	4,700
	INSTRUMENTATION	1	JOB	SUM	1,250
	MECHANICAL				
	GATE AND VALVE OPERATING MACHINERY	1	JOB	SUM	2,750
	MECHANICAL SYSTEMS	1	JOB	SUM	3,200
	MISCELLANEOUS	1	JOB	SUM	1,950
	05 LOCKS SUBTOTAL				92,033

LOCK AND DAM NO. 17, LOCATION 3, TYPE B
1200' LOCK ALTERNATIVE (ROCK FOUNDED)

05.60.	GUIDEWALLS				
	SITEWORK				
	EXCAVATION	118,490	CY	4.5	533
	BACKFILL	73,640	CY	10	736
	SCOUR PROTECTION	46,350	TON	15	695
	CONCRETE				
	42" DIAMETER PILES	6,360	LF	400	2,544
	CAST IN PLACE REINFORCED CONCRETE	6,207	CY	150	931
	PRECAST BEAMS	17,325	CY	500	8,663
	PRECAST BEAM SEATS	262	CY	1000	262
	TREMIE CONCRETE	1,709	CY	500	855
	PERMANENT CELL FILL (C0NCRETE)	5,709	CY	200	1,142
	GROUT FOR BEAMS	778	CY	1000	778
	STEEL REINFORCEMENT	2,921,700	LB	0.75	2,191
	GRAVEL FILL	19,820	CY	10	198
	METALS				
	SHEET PILING	105,096	SF	25.00	2,627
	FOUNDATION PILING	1	JOB	SUM	318
	POST TENSIONING	2,030	LF	30	61
	STRUCTURAL STEEL	1	JOB	SUM	4,060
	05.60 GUIDEWALLS SUBTOTAL				26,594
09.	CHANNEL WORK	1	JOB	SUM	6,404
	PROJECT SUBTOTAL				125,327
	CONTINGENCIES 25%				31,332
	PROJECT SUBTOTAL WITH CONTINGENCIES				156,659
30.	PLANNING, ENGINEERING, AND DESIGN (10%)				16,000
31.	CONSTRUCTION MANAGEMENT (10%)				16,000
	PROJECT TOTAL				$ 189,000

LOCK AND DAM NO. 17, LOCATION 3, TYPE C
1200' LOCK ALTERNATIVE (PILE FOUNDED)

CCOUNT CODE	L/D 17	QUANTITY	UNIT	NIT PRICE ($'s)	AMOUNT ($1,000's)
01.	**LANDS AND DAMAGES**				
	REAL ESTATE	1	JOB	SUM	150
04.	**DAMS**				
	REMOVAL OF EXISTING STRUCTURES	1	JOB	SUM	150
	04 DAMS SUBTOTAL				150
05.	**LOCKS**				
	SITEWORK				
	MOBILIZATION	1	JOB	SUM	10,650
	DEMOLITION	1	JOB	SUM	1,910
	EXCAVATION	102,400	CY	6.25	640
	FOUNDATION FILL AT SCOUR HOLE	0	CY	18.75	0
	WALL FILL	15,760	CY	10.00	158
	CAPSTONE	52,660	TN	25.00	1,317
	RIPRAP	33,380	TN	20.00	668
	LEVELING STONE IN LOCK FLOOR	4,580	TN	15.00	69
	GRAVEL FILTER IN LOCK FLOOR	16,606	TN	15.00	249
	GEOTEXTILE	13,740	SY	6.00	82
	FOUNDATION/LOCK DEWATERING	1	JOB	SUM	3,000
	MARINE FACILITIES, TEMP. MOORING STR.	1	JOB	SUM	3,900
	CONCRETE				
	STRUCTURAL GROUTING	450	CY	200	90
	CAST IN PLACE REINFORCED CONCRETE	58,800	CY	217	12,760
	CAST IN PLACE CONNECTIONS	964	CY	725	699
	PRECAST CONCRETE	2,895	CY	400	1,158
	TREMIE CONCRETE	9,135	CY	165	1,507
	PRECAST FLOOR PAVERS AND STRUTS	15,450	CY	286	4,419
	SET PRECAST FLOOR BEAMS	31	EA	16000	496
	SET FLOOR PANELS	62	EA	10000	620
	STEEL REINFORCEMENT	6,586,000	LB	0.75	4,940
	METALS				
	SHEET PILING	260,100	SF	35.80	9,312
	SHEET PILE BRACING	1	JOB	SUM	350
	FOUNDATION PILING AND TESTING	222,300	LF	39.75	8,836
	STRUCTURAL STEEL (GATES, VALVES, TRASH	1	JOB	SUM	11,613
	STRUCTURAL STEEL (MISCELLANEOUS - LAD	1	JOB	SUM	3,040
	ELECTRICAL				
	ELECTRICAL SYSTEM	1	JOB	SUM	4,700
	INSTRUMENTATION	1	JOB	SUM	1,250
	MECHANICAL				
	GATE AND VALVE OPERATING MACHINERY	1	JOB	SUM	2,750
	MECHANICAL SYSTEMS	1	JOB	SUM	3,200
	MISCELLANEOUS	1	JOB	SUM	1,950
	05 LOCKS SUBTOTAL				96,331

LOCK AND DAM NO. 17, LOCATION 3, TYPE C
1200' LOCK ALTERNATIVE (PILE FOUNDED)

05.60.	**GUIDEWALLS**				
	SITEWORK				
	~~EXCAVATION~~ *(Included in Channel Work)*	0	CY	4.5	0
	~~BACKFILL~~ *None*	0	CY	10	0
	SCOUR PROTECTION	37,312	TON	15	560
	CONCRETE				
	42" DIAMETER PILES	5,120	LF	400	2,048
	CAST IN PLACE REINFORCED CONCRETE	977	CY	150	147
	PRECAST BEAMS	13,947	CY	500	6,973
	PRECAST BEAM SEATS	211	CY	1000	211
	TREMIE CONCRETE	168	CY	500	84
	PERMANENT CELL FILL (C0NCRETE)	7,806	CY	200	1,561
	GROUT FOR BEAMS	626	CY	1000	626
	STEEL REINFORCEMENT	2,351,969	LB	0.75	1,764
	GRAVEL FILL	38,234	CY	10	382
	METALS				
	SHEET PILING	1	JOB	SUM	6,131
	FOUNDATION PILING	1	JOB	SUM	256
	POST TENSIONING	1,634	LF	30	49
	STRUCTURAL STEEL	1	JOB	SUM	3,268
	FLOATING GUIDEWALL	1	JOB	SUM	3,750
	05.60 GUIDEWALLS SUBTOTAL				27,811
09.	**CHANNEL WORK**	1	JOB	SUM	6,400
11.	**LEVEE WORK**	1	JOB	SUM	1,500
	PROJECT SUBTOTAL				132,342
	CONTINGENCIES 25%				33,085
	PROJECT SUBTOTAL WITH CONTINGENCIES				165,427
30.	**PLANNING, ENGINEERING, AND DESIGN (10%)**				16,500
31.	**CONSTRUCTION MANAGEMENT (10%)**				16,500
	PROJECT TOTAL				$ 198,427

TOTAL BASIC LOCK COST (O4., 05., 05.60.) WITH CONTINGENCIES, PED, & CM* **$ 198,000**

*(EXCLUDES REAL ESTATE, RELOCATION, AND CHANNEL WORK WHICH ARE MORE SITE-SPECIFIC.)

Subject	ROCK FOUNDED LOCKS: L/D 17 Location 3 Quantities for Type C Lock, Parallel Sheetpile Walls	Date April 1997
Computed by David R. Wehrley	Checked DRW	Sheet 1 of 4

Riverward Lockwall

(Including the miter gate monolith)

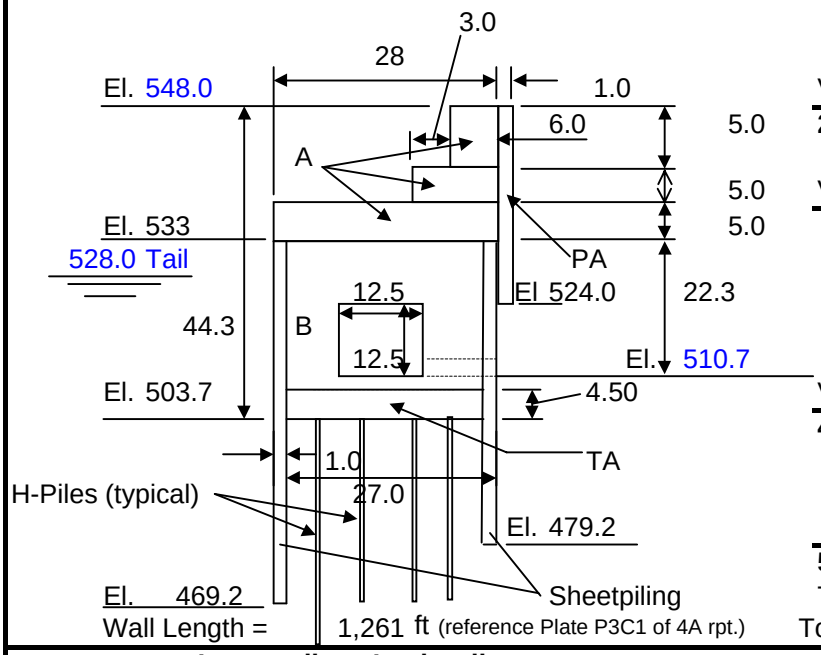

Wall Length = 1,261 ft (reference Plate P3C1 of 4A rpt.)

1. Cast in place concrete

A =	215.0	SF
B =	498.9	SF
Sum =	713.9	SF
Volume =	**33,339**	CY

2. Tremie concrete

TA =	121.5	SF
Volume =	**5,675**	CY

3. Precast concrete

PA =	24.0	SF	
PB =	14.5	SF	(Culvert top, not shown)
Sum =	38.5	SF	
Volume =	**1,798**	CY	

4. Sheetpiling

Ht. Left=	63.8	FT
Ht. Right=	53.8	FT
Area =	**148,294**	SF (both sides)

5. H-Piling = 54/45' mono x wall length

Total No.=	1,513	HP 14 X89
Total Lgth.=	**113,490**	LF HP

Intermediate Lockwall

(Including the miter gate monolith)

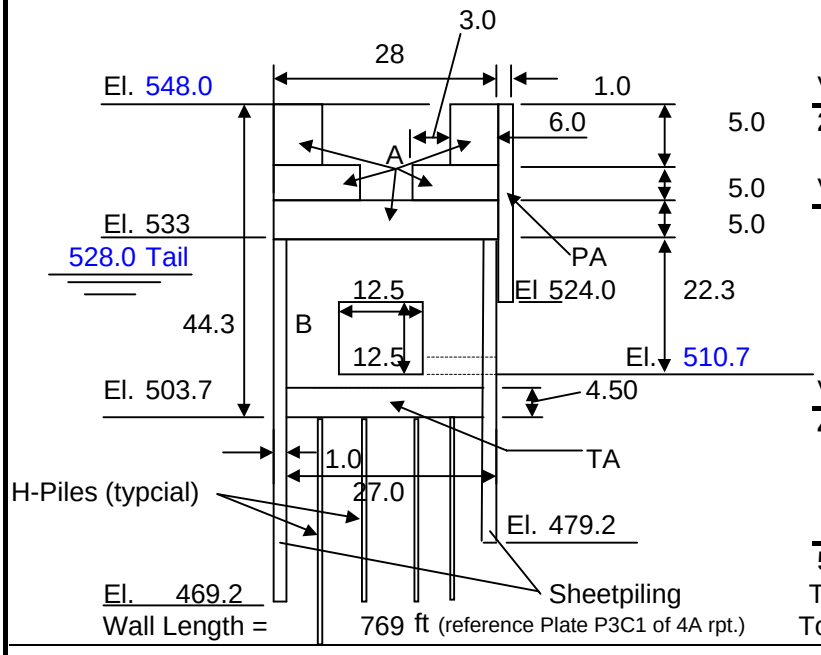

Wall Length = 769 ft (reference Plate P3C1 of 4A rpt.)

1. Cast in place concrete

A =	290.0	SF
B =	498.9	SF
Sum =	788.9	SF
Volume =	**22,468**	CY

2. Tremie concrete

TA =	121.5	SF
Volume =	**3,461**	CY

3. Precast concrete

PA =	24.0	SF	
PB =	14.5	SF	(Culvert top, not shown)
Sum =	38.5	SF	
Volume =	**1,097**	CY	

4. Sheetpiling

Ht. Left=	63.8	FT
Ht. Right=	53.8	FT
Area =	**90,434**	SF (both sides)

5. H-Piling = 54/45' mono x wall length

Total No.=	923	HP 14 X89
Total Lgth.=	**69,210**	FT HP

Subject		Date
L/D 17 Location 3 Quantities for Type C Lock, Parallel Sheetpile Walls		April 1997
Computed by David R. Wehrley	Checked	Sheet 2 of 4

COFFERDAM (ONLY SINGLE WALL COFFERDAM -- FOR LOWER MITER GATE MONOLITH):

ASSUME THE SAME AS L/D 25

Extra Sheetpiling = 2 x (29+110+29) x length
= 21,437 LF Sheetpiling

LOWER MITER GATE SILL:

Length =	120.0 ft	**Volume =**	2,933.3 CY (cast-in-place concrete)
Width =	110.0 ft		
Average Height =	6.0 ft		

H-piling for sill: Assume 5' spacing each way, 75' long
Total = (120/5 x 110/5) x 75
= 39,600 LF (HP 14X89)

SUMMARY:

CONCRETE (Cast in place)

Lockwalls =	55,807	CY
Sills =	2,933	CY
Total =	58,800	CY

PRECAST CONCRETE

Total =	2,895	CY

TREMIE CONCRETE

Total =	9,135	CY

SHEETPILING

Required quantity for walls =	238,700	SF
Required quantity for cofferdam =	21,400	SF
Total =	260,100	SF of piling

FOUNDATION PILING

Total =	222,300	LF (HP 14 X 89)

Subject		Date
L/D 17 Location 3 Quantities for Type C Lock, Guardwalls		April 1997
Computed by David R. Wehrley	Checked David R. Wehrley	Sheet 3 of 4

Upstream Guardwall Cell, Small (14 total)
(Downstream Quantities the same)

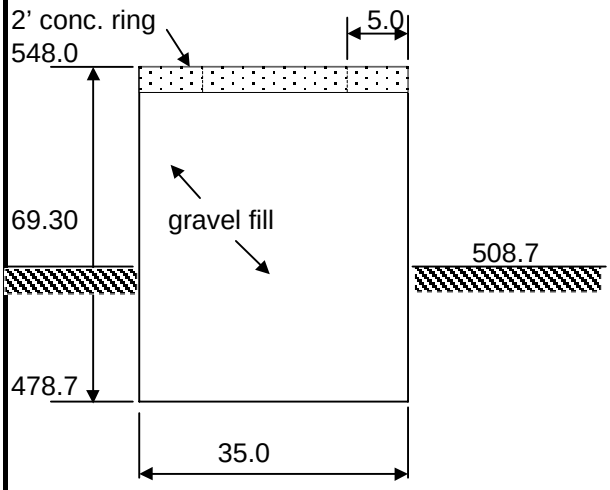

Except for those quantities computed here, all other quantities are assumed the same as for Lock 25 (the model site for pile-founded locks).

Cast-in-Place Concrete

2' conc. ring =		34.9	CY
for 14 cells	=	489	CY
Gravel fill	=	1,366	CY
for 14 cells	=	19,117	CY
Sheet Piling	=	7,620	SF
for 14 cells	=	106,679	SF

Upstream Guardwall Cell, Large, Concrete filled (1 total)
(Downstream Quantities the same)

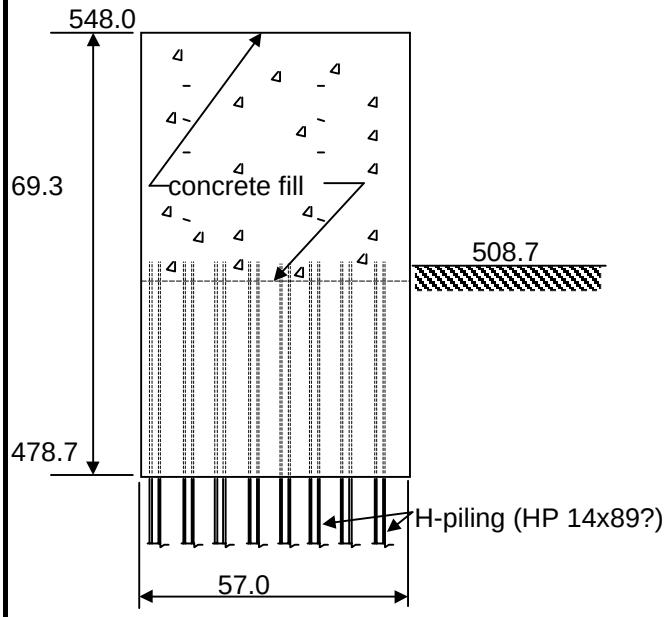

Concrete Fill for Cell

	=	3,903	CY
Sheet Piling	=	12,410	SF

H-piling:

No. of Piles =	102	
Length of Piles =	7,650	L.F.

Subject		Date
L/D 17 Location 3 Quantities for Type C Lock, Guardwalls		April 1997
Computed by David R. Wehrley	Checked David R. Wehrley	Sheet 4 of 4

LOCK GUIDEWALLS :

A. UPSTREAM GUIDEWALL

1. Concrete Rings (cast-in-place)

Volume = 489 CY

2. Concrete cell fill

Volume = 3,903 CY

3. Gravel Fill

Volume = 19,117 CY

4. Sheet Piling

Area = 119,089 SF

5. H-Piling

Length = 7,650 LF

B. DOWNSTREAM GUIDEWALL

1. Concrete Rings (cast-in-place)

Volume = 489 CY

2. Concrete cell fill

Volume = 3,903 CY

3. Gravel Fill

Volume = 19,117 CY

4. Sheet Piling

Area = 119,089 SF

5. H-Piling

Length = 7,650 LF

Guidewall Summary

Total Cast-in-Place Concrete	977	CY
Total Concrete Fill	7,806	CY
Total Gravel Fill	38,234	CY
Total Sheet Piling	238,177	SF
Total H-Piling	15,300	LF

LOCK AND DAM NO.17, LOCATION NO.4, TYPE A,
1200' LOCK ALTERNATIVE (PILE FOUNDED)

ACCOUNT CODE	ITEM	QUANTITY	UNIT	UNIT PRICE ($'s)	AMOUNT ($1,000's)
01.	**LANDS AND DAMAGES**				
	REAL ESTATE	1	JOB	SUM	146
04.	**DAMS**				
	DEMOLITION (TAINTER GATE BAY NO.1)	1	JOB	SUM	1,504
	CONCRETE (TIE-IN TO EXISTING LOCK)	362	CY	280.00	101
	MISCELLANEOUS	1	JOB	SUM	150
	REPLACEMENT TAINTER GATE	1	JOB	SUM	25,000
	04 DAMS SUBTOTAL				26,755
05.	**LOCKS**				
	SITEWORK				
	MOBILIZATION	1	JOB	SUM	10,650
	DEMOLITION	1	JOB	SUM	1,910
	EXCAVATION	48,960	CY	6.25	306
	FOUNDATION FILL AT SCOUR HOLE	0	CY	18.75	0
	LOCK WALL FILL AND COFFERDAM FILL	330,100	CY	10.00	3,301
	CAPSTONE	52,660	TN	25.00	1,317
	RIPRAP	33,380	TN	20.00	668
	LEVELING STONE IN LOCK FLOOR	4,580	TN	15.00	69
	GRAVEL FILTER IN LOCK FLOOR	16,606	TN	15.00	249
	GEOTEXTILE	13,740	SY	6.00	82
	FOUNDATION/LOCK DEWATERING	1	JOB	SUM	3,000
	MARINE FACILITIES, TEMP. MOORING STR.	1	JOB	SUM	3,900
	CONCRETE				
	STRUCTURAL GROUTING	450	CY	200	90
	CAST IN PLACE REINFORCED CONCRETE	108,000	CY	217	23,436
	CAST IN PLACE CONNECTIONS	964	CY	725	699
	PRECAST CONCRETE	0	CY	400	0
	TREMIE CONCRETE, BASE .	12,736	CY	165	2,101
	PRECAST FLOOR PAVERS AND STRUTS	15,450	CY	286	4,419
	SET PRECAST FLOOR BEAMS	31	EA	16000	496
	SET FLOOR PANELS	62	EA	10000	620
	STEEL REINFORCEMENT	6,480,000	LB	0.75	4,860
	METALS				
	SHEET PILING	643,500	SF	35.80	23,037
	SHEET PILE BRACING	1	JOB	SUM	350
	FOUNDATION PILING AND TESTING	209,190	LF	39.75	8,315
	STRUCTURAL STEEL (GATES, VALVES, ETC.)	1	JOB	SUM	11,613
	STRUCT. STEEL (MISCELLANEOUS - LADDERS, ETC.)	1	JOB	SUM	3,040
	ELECTRICAL				
	ELECTRICAL SYSTEM		JOB	SUM	4,700
	INSTRUMENTATION	1	JOB	SUM	1,250
	MECHANICAL				
	GATE AND VALVE OPERATING MACHINERY	1	JOB	SUM	2,750
	MECHANICAL SYSTEMS	1	JOB	SUM	3,200
	MISCELLANEOUS	1	JOB	SUM	1,950
	05 LOCKS SUBTOTAL				122,378

LOCK AND DAM NO.17, LOCATION NO.4, TYPE A,
1200' LOCK ALTERNATIVE (PILE FOUNDED)

05.60.	**GUIDEWALLS**				
	SITEWORK				
	EXCAVATION	118,490	CY	4.5	533
	BACKFILL	73,640	CY	10	736
	SCOUR PROTECTION	46,350	TON	15	695
	CONCRETE				
	42" DIAMETER PILES	6,360	LF	400	2,544
	CAST IN PLACE REINFORCED CONCRETE	6,207	CY	150	931
	PRECAST BEAMS	17,325	CY	500	8,663
	PRECAST BEAM SEATS	262	CY	1000	262
	TREMIE CONCRETE	1,709	CY	500	855
	PERMANENT CELL FILL (C0NCRETE)	5,709	CY	200	1,142
	GROUT FOR BEAMS	778	CY	1000	778
	STEEL REINFORCEMENT	2,921,700	LB	0.75	2,191
	GRAVEL FILL	19,820	CY	10	198
	METALS				
	SHEET PILING	105,096	SF	25.00	2,627
	FOUNDATION PILING	1	JOB	SUM	318
	POST TENSIONING	2,030	LF	30	61
	STRUCTURAL STEEL	1	JOB	SUM	4,060
	05.60 GUIDEWALLS SUBTOTAL				26,594
09.	**CHANNEL WORK**	1	JOB	SUM	6,404
	PROJECT SUBTOTAL				182,278
	CONTINGENCIES 25%				45,569
	PROJECT SUBTOTAL WITH CONTINGENCIES				227,847
30.	**PLANNING, ENGINEERING, AND DESIGN (10%)**				23,000
31.	**CONSTRUCTION MANAGEMENT (10%)**				23,000
	PROJECT TOTAL				$ 274,000

LOCK AND DAM NO.17, LOCATION 4, TYPE A
1200'LOCK ALTERNATIVE (PILE FOUNDED)

Subject	PILE FOUNDED LOCKS: L/D 17 Location 4 Quantities for Type A Lock, Crane-In Construction	Date Sep 96
Computed by Michael Cummings	Checked	Sheet 1 of 6

Gate Monolith

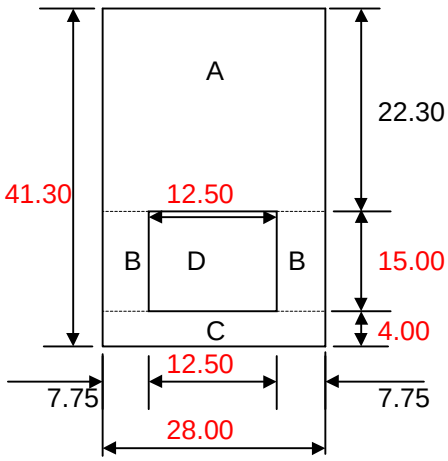

Note: For quantities change the RED values in the cells of the dimensioned cross section shown.

Cast in place concrete

A_g =	624.4	ft^2	
B_g =	232.5	ft^2	
C_g =	112.0	ft^2	
D_g =	187.5	ft^2	CULVERT
Total =	968.9	ft^2	

Tremie concrete (below "C")

132.0 ft^2

hght chk = 41.30 left
hght chk = 41.30 right

US lngth = 265.0 ft DS lngth = 240.0 ft

Lock Wall
typical

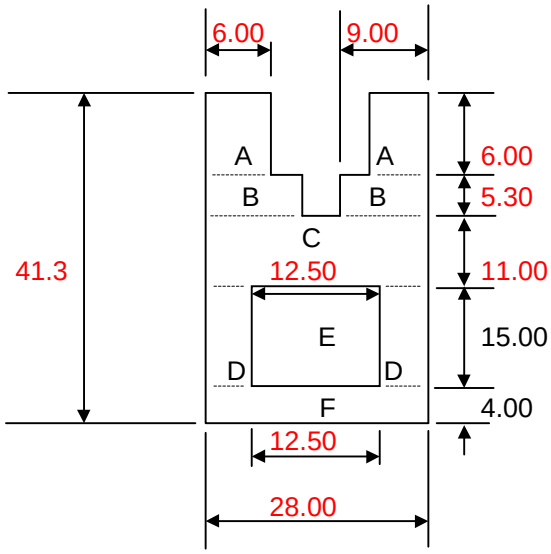

Cast in place concrete

A_w =	72.00	ft^2	
B_w =	95.40	ft^2	
C_w =	308.00	ft^2	
D_w =	232.50	ft^2	
E_w =	187.50	ft^2	CULVERT
F_w =	112.00	ft^2	
Total =	819.90	ft^2	

Tremie concrete (below "F")

132.0 ft^2

hght chk = 41.30 left
hght chk = 41.30 right

RS Wall = 1,050.0 ft LS Wall = 1,050.0 ft

LOCK AND DAM NO.17, LOCATION 4, TYPE A
1200'LOCK ALTERNATIVE (PILE FOUNDED)

Subject		Date
L/D 17 Location 4 Quantities for Type A Lock, Crane-In Construction		Sep 96
Computed by Michael Cummings	Checked	Sheet 2 of 6

Typical cell for cofferdam

Area = 1,736.0 ft^2

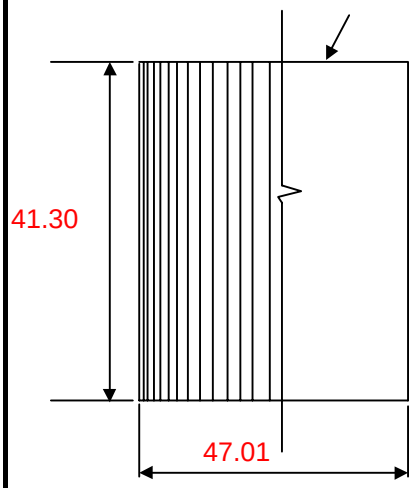

Pile type: PS31
Choose PSA23, PS27.5, or PS31

Area between cells:

Area =	773.0	ft^2
Distance =	15.28	ft
Length =	1.64	ft
Number in cell =	90	piles
No. in space =	20	piles
US Length =	2,650.0	ft
DS Length =	2,650.0	ft

LOCK CHAMBER WALLS:

A. WALL MONOLITHS

1. River side walls

(a) Cast in place concrete

Volume = 31,885.0 CY

(b) Precast concrete

Volume = .0 CY

1. Land side walls

(a) Cast in place concrete

Volume = 31,885.0 CY

(b) Precast concrete

Volume = .0 CY

B. GATE MONOLITHS

1. Upstream cast in place concrete

Volume = 19,019.1 CY

2. Upstream precast concrete

Volume = .0 CY

1. Downstream cast in place concrete

Volume = 17,224.9 CY

2. Downstream precast concrete

Volume = .0 CY

LOCK AND DAM NO.17, LOCATION 4, TYPE A
1200'LOCK ALTERNATIVE (PILE FOUNDED)

Subject		Date
L/D 17 Location 4 Quantities for Type A Lock, Crane-In Construcion		Sep 96
Computed by Michael Cummings	Checked	Sheet 3 of 6

COFFERDAMS:

1. Cofferdam #1, Upstream

Number = 43.0 cells

Total = 9,460.0 piles

2. Cofferdam #2, Upstream

Number = 43.0 cells

Total = 330,054.0 CY fill volume

SILLS:

Length = 120.0 ft
Width = 111.0 ft
Height = 8.0 ft

Volume = 7,893.3 CY

SUMMARY:

CONCRETE (Cast in place)

A.	Lockwalls =	63,770.0 CY
B.	Gate monoliths =	36,244.0 CY
C.	Sills =	7,893.3 CY
D.	Tremie =	12,735.6 CY
	Total =	108,000.0 CY

PRECAST CONCRETE

A.	Lockwalls =	.0 CY
B.	Gate monoliths =	.0 CY
	Total =	.0 CY

SHEETPILES

A.	Required number for cofferdams =	9,460.0 piles
B.	Required number for walls =	0 piles
	Total =	9,500.0 piles
	Total =	643,500.0 SF of piling

FILL

A.	Required fill for cofferdams =	330,054.0 CY
	Total =	330,100.0 CY

LOCK AND DAM NO.17, LOCATION 4, TYPE A
1200'LOCK ALTERNATIVE (PILE FOUNDED)

Subject		Date
L/D 17 Location 4 Quantities for Type B Lock, Crane-In Construcion		Sep 96
Computed by Michael Cummings	Checked	Sheet 4 of 6

Upstream Guidewall Cell, Small

(typical)

Area = 700.0 SF

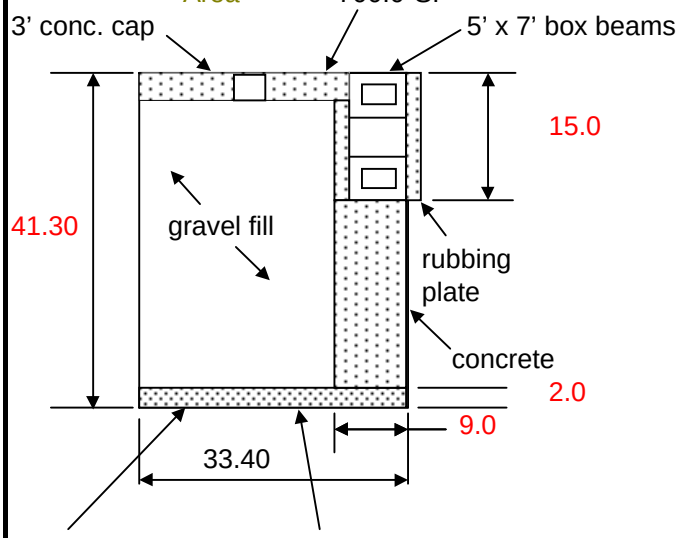

Area = 876.0 SF

Note: For quantities change the RED values in the cells of the dimensioned cross section shown.

Cast-in-Place Concrete

3' conc. cap	=	77	CY
concrete	=	197	CY
Total	=	274	CY
for 7 cells	=	1,916	CY
Tremie concrete	=	65	CY
for 7 cells	=	455	CY
Precast Concrete			
5'x7' beam	=	889	CY
rubbing pl.	=	500	CY
Total	=	1,389	CY
Gravel fill	=	944	CY
for 7 cells	=	6,607	CY
Sheet Piling	=	4,334	SF
for 7 cells	=	30,335	SF

Upstream Guidewall Cell, Large

(typical)

Area = 2,124.0 SF

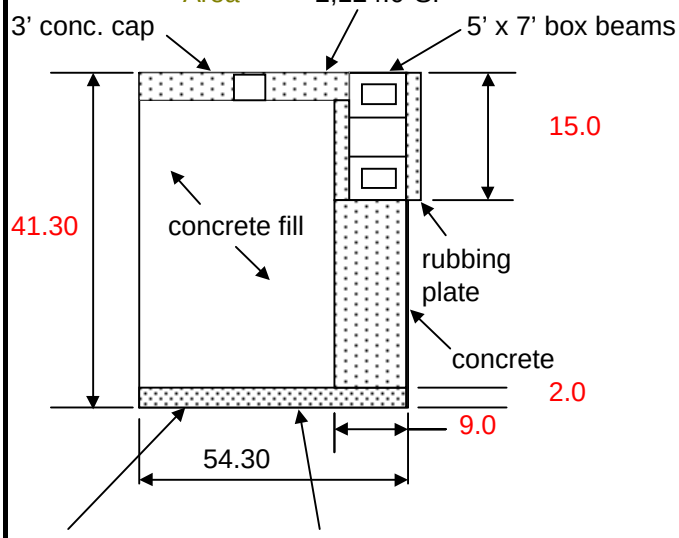

Area = 2,316.0 SF

Note: For quantities change the RED values in the cells of the dimensioned cross section shown.

Cast-in-Place Concrete

3' conc. cap	=	235	CY
concrete	=	252	CY
Total	=	487	CY
Tremie concrete	=	172	CY
Permanent Cell Fill		2,854	CY
Sheet Piling	=	7,045	SF

LOCK AND DAM NO.17, LOCATION 4, TYPE A
1200'LOCK ALTERNATIVE (PILE FOUNDED)

Subject		Date
L/D 17 Location 4 Quantities for Type B Lock, Crane-In Construcion		Sep 96
Computed by Michael Cummings	Checked	Sheet 5 of 6

Downstream Guidewall Cell, Small

(typical)

Area = 700.0 SF

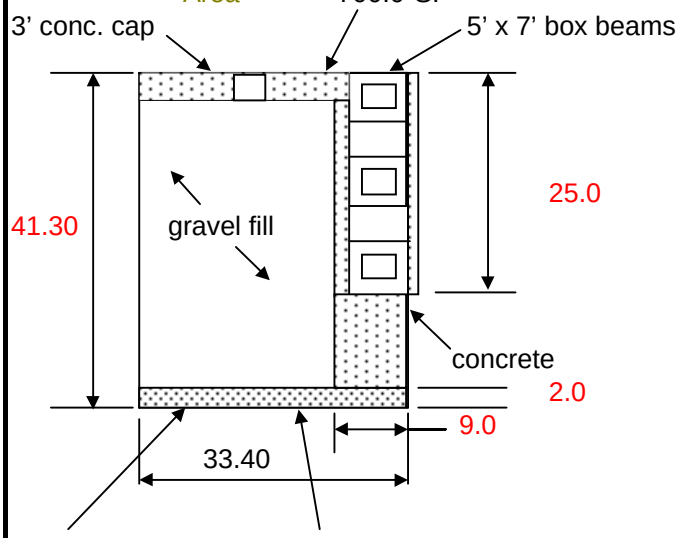

Area = 876.0 SF

Note: For quantities change the RED values in the cells of the dimensioned cross section shown.

Cast-in-Place Concrete			
3' conc. cap	=	77	CY
concrete	=	149	CY
Total	=	225	CY
for 14 cells	=	3,156	CY
Tremie concrete	=	65	CY
for 14 cells	=	910	CY
Precast Concrete			
5'x7' beam	=	2,667	CY
rubbing pl.	=	1,667	CY
Total	=	4,333	CY
Gravel fill	=	944	CY
for 14 cells	=	13,213	CY
Sheet Piling	=	4,334	SF
for 14 cells	=	60,670	SF

Downstream Guidewall Cell, Large

(typical)

Area = 2,124.0 SF

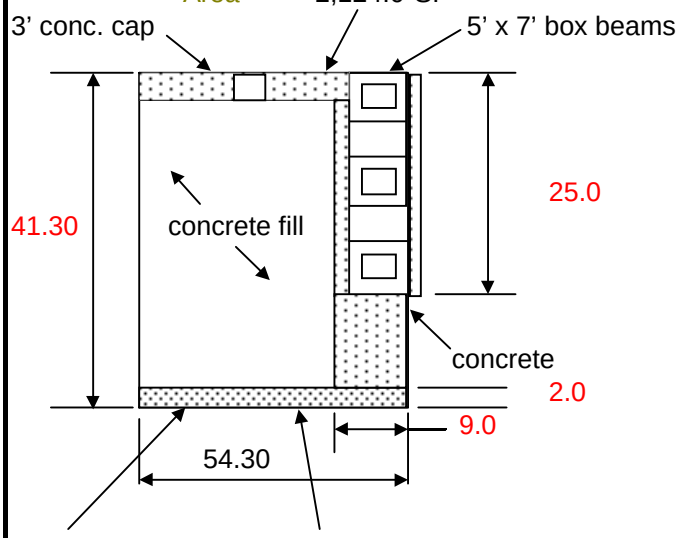

Area = 2,316.0 SF

Note: For quantities change the RED values in the cells of the dimensioned cross section shown.

Cast-in-Place Concrete			
3' conc. cap	=	235	CY
concrete	=	413	CY
Total	=	648	CY
Tremie concrete	=	172	CY
Permanent Cell Fill		2,854	CY
Sheet Piling	=	7,045	SF

LOCK AND DAM NO.17, LOCATION 4, TYPE A
1200'LOCK ALTERNATIVE (PILE FOUNDED)

Subject		Date
L/D 17 Location 4 Quantities for Type B Lock, Crane-In Construcion		Sep 96
Computed by Michael Cummings	Checked	Sheet 6 of 6

LOCK GUIDEWALLS :

A. UPSTREAM GUIDEWALL

1. Cast-in-place concrete

Volume = 2,403 CY

2. Precast concrete

Volume = 1,389 CY

3. Gravel Fill

Volume = 6,607 CY

4. Sheet Piling

Area = 37,380 SF

5. Permanent Cell Fill

Volume = 2,854 CY

6. Tremie Concrete

Volume = 627 CY

B. DOWNSTREAM GUIDEWALL

1. Cast-in-place concrete

Volume = 3,804 CY

2. Precast concrete

Volume = 4,333 CY

3. Gravel Fill

Volume = 13,213 CY

4. Sheet Piling

Area = 67,715 SF

5. Permanent Cell Fill

Volume = 2,854 CY

6. Tremie Concrete

Volume = 1,082 CY

Guidewall Summary

Total Cast-in-Place Concrete	6,207	CY
Total Precast Concrete	5,722	CY
Total Gravel Fill	19,820	CY
Total Sheet Piling	105,096	SF
Total Permanent Cell Fill	5,709	CY
Total Tremie Concrete	1,709	CY

LOCK AND DAM NO.17, LOCATION 4, TYPE B,
1200' LOCK ALTERNATIVE (PILE FOUNDED)

ACCOUNT CODE	ITEM	QUANTITY	UNIT	UNIT PRICE ($'s)	AMOUNT ($1,000's)
01.	**LANDS AND DAMAGES**				
	REAL ESTATE	1	JOB	SUM	200
04.	**DAMS**				
	DEMOLITION (TAINTER GATE BAY NO.1)	1	JOB	SUM	1,504
	REPLACEMENT TAINTER GATE	1	JOB	SUM	25,000
	04 DAMS SUBTOTAL				26,504
05.	**LOCKS**				
	SITEWORK				
	MOBILIZATION	1	JOB	SUM	8,000
	DEMOLITION	1	JOB	SUM	1,910
	EXCAVATION	117,700	CY	4.50	530
	BACKFILL	160,000	CY	6.25	1,000
	CAPSTONE	52,660	TN	25.00	1,317
	SCOUR PROTECTION	1	JOB	SUM	2,300
	RIPRAP	143,700	TN	20.00	2,874
	STONE FILL	16,606	TN	15.00	249
	GEOTEXTILE	13,740	SY	6.00	82
	FOUNDATION/LOCK DEWATERING	1	JOB	SUM	3,000
	COFFERDAM REMOVAL	1	JOB	SUM	81
	MARINE FACILITIES, TEMP. MOORING STR.	1	JOB	SUM	3,900
	CONCRETE				
	STRUCTURAL GROUTING	1	JOB	SUM	5,400
	CAST IN PLACE REINFORCED CONCRETE	43,700	CY	217	9,483
	CAST IN PLACE CONNECTIONS	964	CY	725	699
	PRECAST CONCRETE LOCK FLOOR	8,600	CY	400	3,440
	PRECAST CONCRETE CHAMBER AND APPROACH WALL	7,600	CY	400	3,040
	TREMIE CONCRETE, BASE	20,300	CY	165	3,350
	TREMIE CONCRETE, WALLS	46,900	CY	165	7,739
	FURNISH AND SET LANDING PADS	24	EA	19000	456
	SET PRECAST WALL UNITS	88	EA	16000	1,408
	FLOAT IN AND SET FLOOR UNITS	11	EA	40000	440
	STEEL REINFORCEMENT	5,462,500	LB	0.75	4,097
	STEEL CULVERT PIPE	5,278,500	LB	0.65	3,431
	METALS				
	SHEET PILING	1	JOB	SUM	6,400
	SHEET PILE BRACING	1	JOB	SUM	600
	FOUNDATION PILING AND TESTING	1	JOB	SUM	15,000
	STRUCTURAL STEEL (GATES, VALVES, ETC.)	1	JOB	SUM	11,600
	STRUCT. STEEL (MISCELLANEOUS - LADDERS, ETC.)	1	JOB	SUM	3,000
	ELECTRICAL				
	ELECTRICAL SYSTEM		JOB	SUM	4,700
	INSTRUMENTATION	1	JOB	SUM	1,250
	MECHANICAL				
	GATE AND VALVE OPERATING MACHINERY	1	JOB	SUM	2,750
	MECHANICAL SYSTEMS	1	JOB	SUM	3,200
	MISCELLANEOUS	1	JOB	SUM	1,950
	05 LOCKS SUBTOTAL				118,675

LOCK AND DAM NO.17, LOCATION 4, TYPE B,
1200' LOCK ALTERNATIVE (PILE FOUNDED)

05.60.	**GUIDEWALLS**				
	SITEWORK				
	EXCAVATION	118,490	CY	4.5	533
	BACKFILL	73,640	CY	10	736
	SCOUR PROTECTION	211,130	TON	15	3,167
	CONCRETE				
	42" DIAMETER PILES	6,360	LF	400	2,544
	CAST IN PLACE REINFORCED CONCRETE	13,963	CY	150	2,094
	PRECAST BEAMS	17,325	CY	500	8,663
	PRECAST BEAM SEATS	262	CY	1000	262
	TREMIE CONCRETE	1,709	CY	500	855
	PERMANENT CELL FILL (C0NCRETE)	13,053	CY	200	2,611
	GROUT FOR BEAMS	778	CY	1000	778
	STEEL REINFORCEMENT	2,921,700	LB	0.75	2,191
	GRAVEL FILL	45,318	CY	10	453
	METALS				
	SHEET PILING	223,933	SF	25.00	5,598
	FOUNDATION PILING	1	JOB	SUM	318
	POST TENSIONING	2,030	LF	30	61
	STRUCTURAL STEEL	1	JOB	SUM	4,060
	05.60 GUIDEWALLS SUBTOTAL				34,924
09.	**CHANNEL WORK**	1	JOB	SUM	2,974
	PROJECT SUBTOTAL				183,277
	CONTINGENCIES 25%				45,819
	PROJECT SUBTOTAL WITH CONTINGENCIES				229,096
30.	**PLANNING, ENGINEERING, AND DESIGN (10%)**				23,000
31.	**CONSTRUCTION MANAGEMENT (10%)**				23,000
	PROJECT TOTAL				$ 275,000

LOCK AND DAM NO.17, LOCATION 4, TYPE B,
1200' LOCK ALTERNATIVE (PILE FOUNDED)

Subject	PILE FOUNDED LOCKS: 1200 ft lock L/D 17 Location 4 Quantities for Type B Lock	Date OCT 1996
Computed by Michael Cummings	Checked	Sheet 1 of 7

Gate Monolith
(typical)

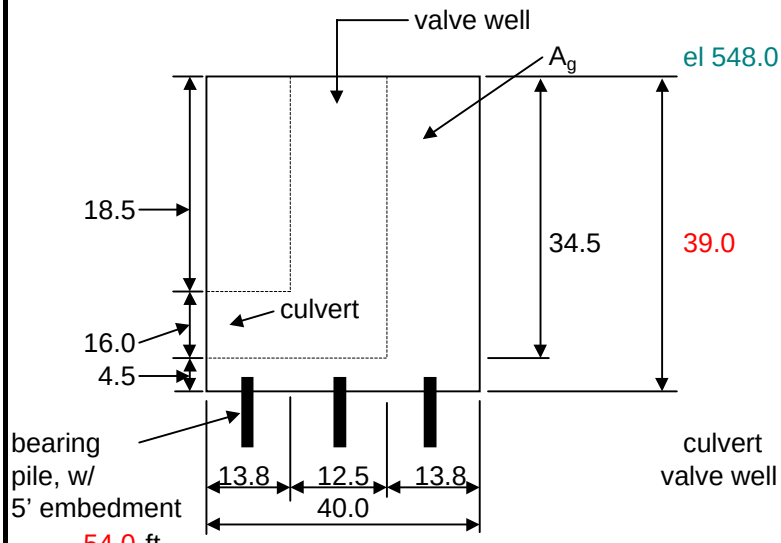

Note: For quantities change the RED values in the cells of the dimensioned cross section shown.

Cast in place concrete

A_g =	15,358.5	CY	U.S.
A_g =	18,536.3	CY	D.S.
Total =	33,894.8	CY	

The culverts are subtracted gross volume

	width	length	heighth	
culvert =	12.5	16.0	50.0	CF
valve well =	12.5	16.0	13.8	CF

54.0 ft
US gates length = 137.0 ft DS gates length = 164.5 ft

hght chk =	39.00	left
hght chk =	39.00	right

Lock Wall
(typical)

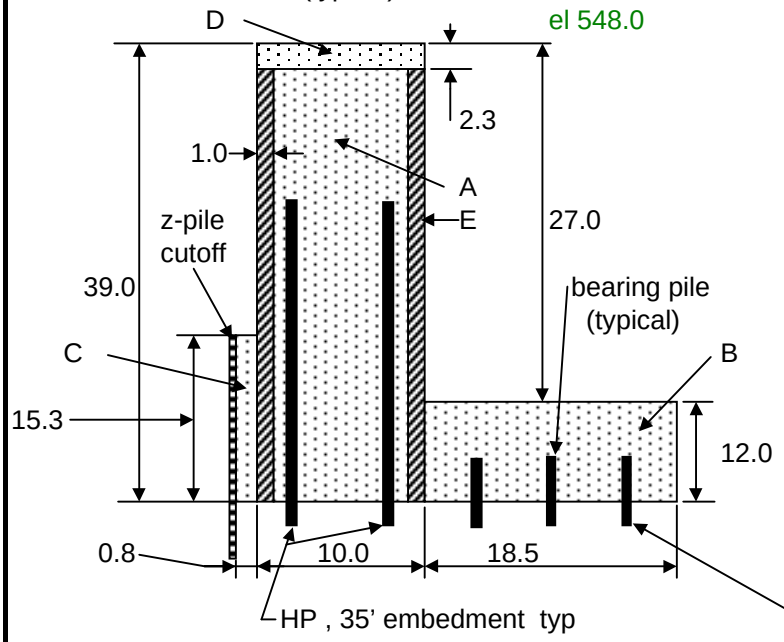

Note: For quantities change the RED values in the cells of the dimensioned cross section

Tremie concrete / CIP

A =	293.6	SF
B =	222.0	SF
C =	11.5	SF

Cast in place

D =	23.0	SF

Pre-cast

E =	73.4	SF
Total =		SF

HP reinforcing ratio = 0.960 HP/ft

Total HP walls = 2,088.0 ea

Total bearing pile = 13,050.0 ea
assume 3' spacing

84.0 ft total length 54.0 ft
RS Wall = 1,087.5 ft LS Wall = 1,087.5 ft

hght chk =	39.00	left
hght chk =	39.00	right

L174bp

LOCK AND DAM NO.17, LOCATION 4, TYPE B,
1200' LOCK ALTERNATIVE (PILE FOUNDED)

Subject	PILE FOUNDED LOCKS: 1200 ft lock L/D 17 Location 4 Quantities for Type B Lock	Date OCT 1996
Computed by Michael Cummings	Checked	Sheet 2 of 7

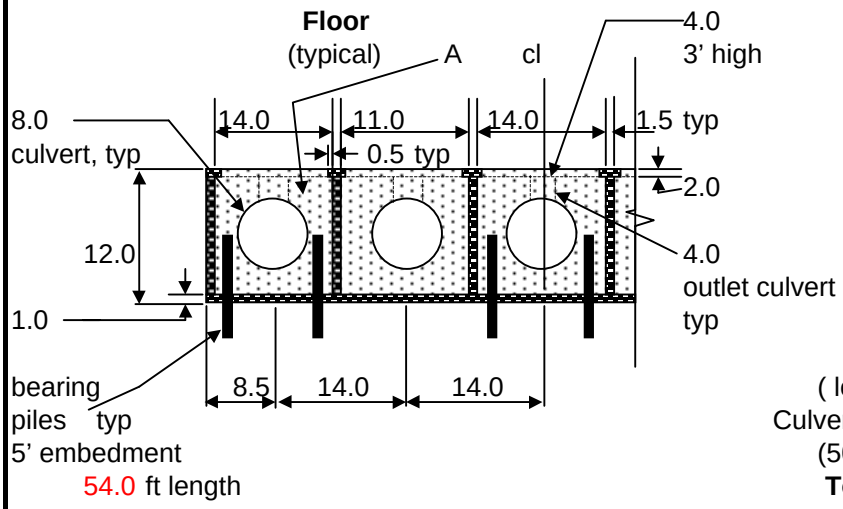

Tremie concrete
A = 442.7 SF
Pre-cast
B = 182.0 SF

Total = 624.7 SF

Piles: 6 rows = 7,620.0 piles
(length not determined)
Culvert fill/empty area = 11.31 CF/ft
(50 ft section from plate P4B2)
Total tremie conc = 20,290.0 CY

Total pre-cast = 8,560.7 CY

Length of floor = 1,270.0 ft width of floor = 73.0 ft

Impact cell
typical
Area = 2,827.0 ft^2

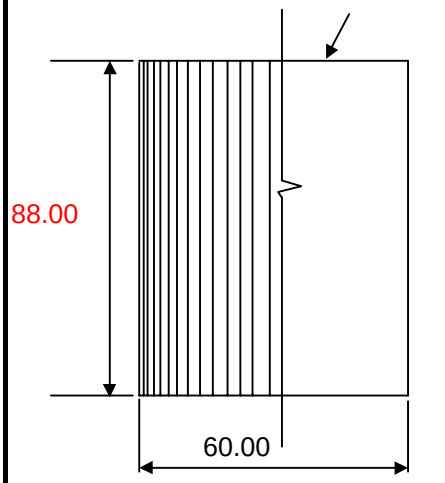

Note: For quantities change the RED values in the cells of the dimensioned cross section shown.

Pile type: PS31
Choose PSA23, PS27.5, or PS31

Area between cells:
Area = 1,127.0 SF

Length = 1.641 ft
Number in cell = 115 piles

US number = 1.0 cells and spaces between cells
DS number = 1.0 cells and spaces between cells

US Wall = 994.0 ft DS Wall = 1,016.0 ft

LOCK AND DAM NO.17, LOCATION 4, TYPE B,
1200' LOCK ALTERNATIVE (PILE FOUNDED)

Subject	PILE FOUNDED LOCKS: 1200 ft lock L/D 17 Location 4 Quantities for Type B Lock	Date OCT 1996
Computed by Michael Cummings	Checked	Sheet 3 of 7

cofferdam cell
typical
Area = 1,963.0 ft^2

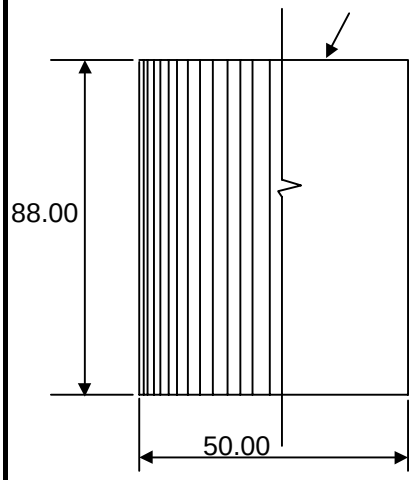

Note: For quantities change the RED values in the cells of the dimensioned cross section shown.

Pile type: PS31
Choose PSA23, PS27.5, or PS31

Area between cells:

Area =	855.0	SF
Distance =	15.91	ft
Length =	1.641	ft
Number in cell =	96	piles
No. in space =	21	piles

UPSTREAM

North or South length:	264.0	.4	modular numbers
East or West length:	330.0	.5	to aid in value search

DOWNSTREAM

North or South length:	264.0	.4	modular numbers
East or West length:	330.0	.5	to aid in value search

US	Total number of cells:	9.0	DS	Total number of cells:	9.0
US	Total number of cells:	11.0	DS	Total number of cells:	11.0

LOCK CHAMBER WALLS:

A. WALL MONOLITHS

1. River side walls
(a) Cast in place concrete
Volume = 926.4 CY
(b) Tremie concrete
Volume = 21,229.4 CY
(c) Pre-cast concrete
Volume = 3,207.7 CY
(d) Pre-cast concrete (approach wall)
Volume = 758.1 CY
(e) Tremie concrete (approach wall)
Volume = 2,969.8 CY

1. Land side walls
(a) Cast in place concrete
Volume = 926.4 CY
(b) Tremie concrete
Volume = 21,229.4 CY
(c) Pre-cast concrete
Volume = 3,207.7 CY
(d) Pre-cast concrete (approach wall)
Volume = 383.5 CY
(e) Tremie concrete (approach wall)
Volume = 1,502.2 CY

B. GATE MONOLITHS

1. Upstream cast in place concrete
Volume = 15,358.5 CY
Piles = 3200 LF

1. Downstream cast in place concrete
Volume = 18,536.3 CY
Piles = 3700 LF

IMPACT CELLS

Total = 230.0 piles
Total = 20,240.0 SF of piling

Total = 18,428.0 CY fill volume

LOCK AND DAM NO.17, LOCATION 4, TYPE B,
1200' LOCK ALTERNATIVE (PILE FOUNDED)

Subject	PILE FOUNDED LOCKS: 1200 ft lock L/D 17 Location 4 Quantities for Type B Lock	Date OCT 1996
Computed by Michael Cummings	Checked	Sheet 4 of 7

SILLS:

Length = 120.0 ft **Volume =** 7,893.0 CY of CIP concrete
111.0 ft
8.0 ft

COFFERDAM CELLS:

Upstream riverside
Total = 2,340.0 piles
Total = 337,915.0 SF of piling

Downstream riverside
Total = 2,340.0 piles
Total = 337,915.0 SF of piling

SUMMARY:

Lockwalls:

CONCRETE (Precast)
A. Lockwalls = 6,415.4 CY
B. Approach walls = 1,141.5 CY **Total =** 7,600.0 CY

CONCRETE (CIP, Cast in place)
A. Lockwalls = 1,852.8 CY
B. Gate mono's = 33,894.8 CY
C. Sills = 7,893.0 CY **Total =** 43,700.0 CY

CONCRETE (Tremie)
A. Lockwalls = 42,458.8
B. Approach walls = 4,472.0 **Total =** 46,900.0 CY

HP PILING **Total =** 87,700.0 LF
BEARING PILES:
Total = 124,400.0 LF

Lock Floor:

CONCRETE:
A. Tremie concrete = 20,300.0 CY
B. Precast = 8,600.0 CY
BEARING PILES:
Total = 137,200.0 LF

Impact cells:

A. SHEETPILES
1. Required number for impact cells = 230.0 piles
Total = 300.0 piles **Total =** 43,400.0 SF of piling

2. Required number for seepage cutoff
Total = .0 SF

B. FILL
1. Required fill for cofferdams = #REF! CY
Total = #REF! CY includes losses from compaction, etc

Cofferdam sheet piling

A. SHEETPILE, up and down stream
Total = 4,700.0 piles **Total =** 675,900.0 SF

LOCK AND DAM NO.17, LOCATION 4, TYPE B,
1200' LOCK ALTERNATIVE (PILE FOUNDED)

Subject	PILE FOUNDED LOCKS: L/D 17 Location 4 Quantities for Type B Lock	Date OCT 1996
Computed by Michael Cummings	Checked	Sheet 5 of 7

Upstream Guidewall Cell, Small

(typical)

Area = 700.0 SF

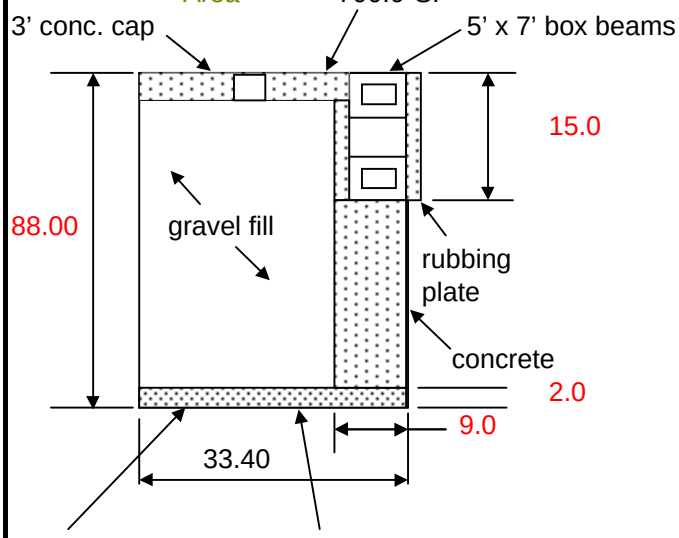

Area = 876.0 SF

Note: For quantities change the RED values in the cells of the dimensioned cross section shown.

Cast-in-Place Concrete			
3' conc. cap	=	77	CY
concrete	=	525	CY
Total	=	602	CY
for 7 cells	=	4,213	CY
Tremie concrete	=	65	CY
for 7 cells	=	455	CY
Precast Concrete			
5'x7' beam	=	889	CY
rubbing pl.	=	500	CY
Total	=	1,389	CY
Gravel fill	=	2,158	CY
for 7 cells	=	15,106	CY
Sheet Piling	=	9,234	SF
for 7 cells	=	64,636	SF

Upstream Guidewall Cell, Large

(typical)

Area = 2,124.0 SF

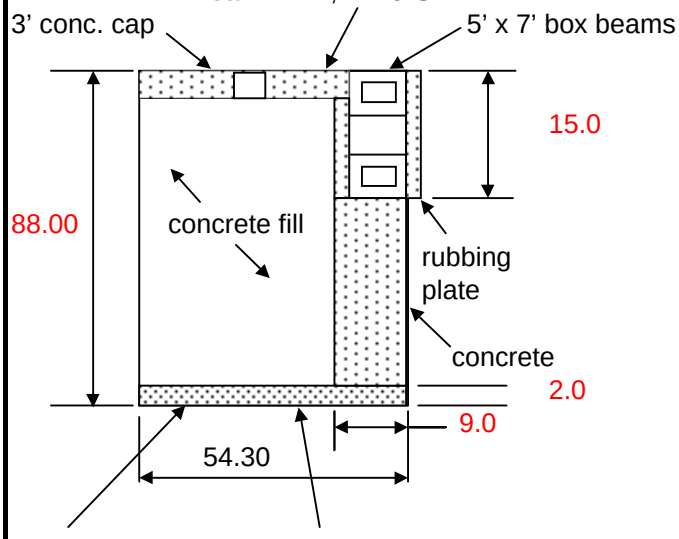

Area = 2,316.0 SF

Note: For quantities change the RED values in the cells of the dimensioned cross section shown.

Cast-in-Place Concrete			
3' conc. cap	=	235	CY
concrete	=	685	CY
Total	=	920	CY
Tremie concrete	=	172	CY
Permanent Cell Fill		6,526	CY
Sheet Piling	=	15,012	SF

L174bp

LOCK AND DAM NO.17, LOCATION 4, TYPE B,
1200' LOCK ALTERNATIVE (PILE FOUNDED)

Subject	PILE FOUNDED LOCKS: L/D 17 Location 4 Quantities for Type B Lock	Date OCT 1996
Computed by Michael Cummings	Checked	Sheet 6 of 7

Downstream Guidewall Cell, Small

(typical)

Area = 700.0 SF

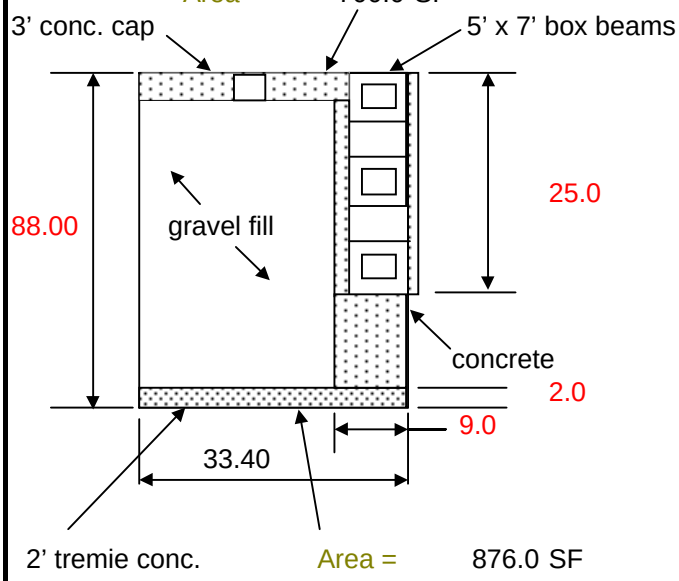

Area = 876.0 SF

Note: For quantities change the RED values in the cells of the dimensioned cross section shown.

Cast-in-Place Concrete

3' conc. cap	=	77	CY
concrete	=	477	CY
Total	=	554	CY
for 14 cells	=	7,750	CY
Tremie concrete	=	65	CY
for 14 cells	=	910	CY

Precast Concrete

5'x7' beam	=	2,667	CY
rubbing pl.	=	1,667	CY
Total	=	4,333	CY
Gravel fill	=	2,158	CY
for 14 cells	=	30,212	CY
Sheet Piling	=	9,234	SF
for 14 cells	=	129,273	SF

Downstream Guidewall Cell, Large

(typical)

Area = 2,124.0 SF

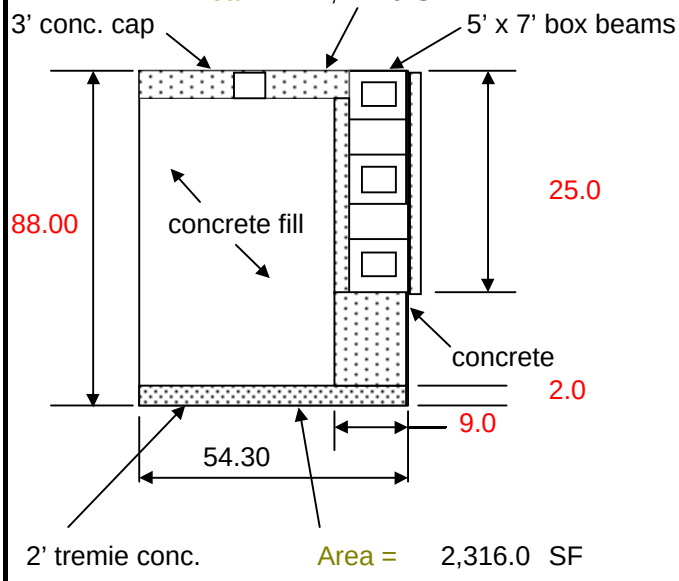

Area = 2,316.0 SF

Note: For quantities change the RED values in the cells of the dimensioned cross section shown.

Cast-in-Place Concrete

3' conc. cap	=	235	CY
concrete	=	846	CY
Total	=	1,081	CY
Tremie concrete	=	172	CY
Permanent Cell Fill		6,526	CY
Sheet Piling	=	15,012	SF

LOCK AND DAM NO.17, LOCATION 4, TYPE B,
1200' LOCK ALTERNATIVE (PILE FOUNDED)

Subject	PILE FOUNDED LOCKS: L/D 17 Location 4 Quantities for Type B Lock	Date OCT 1996
Computed by Michael Cummings	Checked	Sheet 7 of 7

LOCK GUIDEWALLS :

A. UPSTREAM GUIDEWALL

1. Cast-in-place concrete

Volume = 5,133 CY

2. Precast concrete

Volume = 1,389 CY

3. Gravel Fill

Volume = 15,106 CY

4. Sheet Piling

Area = 79,648 SF

5. Permanent Cell Fill

Volume = 6,526 CY

6. Tremie Concrete

Volume = 627 CY

B. DOWNSTREAM GUIDEWALL

1. Cast-in-place concrete

Volume = 8,830 CY

2. Precast concrete

Volume = 4,333 CY

3. Gravel Fill

Volume = 30,212 CY

4. Sheet Piling

Area = 144,285 SF

5. Permanent Cell Fill

Volume = 6,526 CY

6. Tremie Concrete

Volume = 1,082 CY

Guidewall Summary

Total Cast-in-Place Concrete	13,963	CY
Total Precast Concrete	5,722	CY
Total Gravel Fill	45,318	CY
Total Sheet Piling	223,933	SF
Total Permanent Cell Fill	13,053	CY
Total Tremie Concrete	1,709	CY

LOCK AND DAM NO.17, LOCATION 4, TYPE C,
1200' LOCK ALTERNATIVE (PILE FOUNDED)

ACCOUNT CODE	ITEM	QUANTITY	UNIT	UNIT PRICE ($'s)	AMOUNT ($1,000's)
01.	**LANDS AND DAMAGES**				
	REAL ESTATE	1	JOB	SUM	146
04.	**DAMS**				
	DEMOLITION (TAINTER GATE BAY NO.1)	1	JOB	SUM	1,504
	REPLACEMENT TAINTER GATE	1	JOB	SUM	25,000
	04 DAMS SUBTOTAL				26,504
05.	**LOCKS**				
	SITEWORK				
	MOBILIZATION	1	JOB	SUM	8,000
	DEMOLITION	1	JOB	SUM	1,910
	EXCAVATION	117,700	CY	4.50	530
	BACKFILL	160,000	CY	6.25	1,000
	CAPSTONE	52,660	TN	25.00	1,317
	SCOUR PROTECTION	1	JOB	SUM	2,300
	RIPRAP	143,700	TN	20.00	2,874
	STONE FILL	16,606	TN	15.00	249
	GEOTEXTILE	13,740	SY	6.00	82
	FOUNDATION/LOCK DEWATERING	1	JOB	SUM	3,000
	COFFERDAM REMOVAL	1	JOB	SUM	81
	MARINE FACILITIES, TEMP. MOORING STR.	1	JOB	SUM	3,900
	CONCRETE				
	STRUCTURAL GROUTING	1	JOB	SUM	5,400
	CAST IN PLACE REINFORCED CONCRETE	40,100	CY	217	8,702
	CAST IN PLACE CONNECTIONS	964	CY	725	699
	PRECAST FLOOR SLABS	3,398	CY	150	510
	PRECAST CONCRETE APPROACH WALLS	1,532	CY	400	613
	PRECAST CULVERTS	4,990	CY	600	2,994
	PRECAST RUB PANELS	54,375	SF	40	2,175
	TREMIE CONCRETE, BASE	19,130	CY	165	3,156
	TREMIE CONCRETE, WALLS	4,527	CY	175	792
	STEEL REINFORCEMENT	5,012,500	LB	0.75	3,759
	CELL FILL, GRAVEL	137,499	CY	10	1,375
	METALS				
	SHEET PILING	689,392	SF	25.00	17,235
	SHEET PILE BRACING	1	JOB	SUM	600
	FOUNDATION PILING AND TESTING	1	JOB	SUM	15,000
	STRUCTURAL STEEL (GATES, VALVES, ETC.)	1	JOB	SUM	11,600
	STRUCT. STEEL (MISCELLANEOUS - LADDERS, ETC.)	1	JOB	SUM	3,000
	ELECTRICAL				
	ELECTRICAL SYSTEM		JOB	SUM	4,700
	INSTRUMENTATION	1	JOB	SUM	1,250
	MECHANICAL				
	GATE AND VALVE OPERATING MACHINERY	1	JOB	SUM	2,750
	MECHANICAL SYSTEMS	1	JOB	SUM	3,200
	MISCELLANEOUS	1	JOB	SUM	1,950
	05 LOCKS SUBTOTAL				116,703

LOCK AND DAM NO.17, LOCATION 4, TYPE C,
1200' LOCK ALTERNATIVE (PILE FOUNDED)

05.60.	**GUIDEWALLS**				
	SITEWORK				
	EXCAVATION	118,490	CY	4.5	533
	BACKFILL	73,640	CY	10	736
	SCOUR PROTECTION	211,130	TON	15	3,167
	CONCRETE				
	42" DIAMETER PILES	6,360	LF	400	2,544
	CAST IN PLACE REINFORCED CONCRETE	5,825	CY	150	874
	PRECAST BEAMS	17,325	CY	500	8,663
	PRECAST BEAM SEATS	262	CY	1000	262
	TREMIE CONCRETE	1,709	CY	500	855
	PERMANENT CELL FILL (C0NCRETE)	5,347	CY	200	1,069
	GROUT FOR BEAMS	778	CY	1000	778
	STEEL REINFORCEMENT	2,921,700	LB	0.75	2,191
	GRAVEL FILL	18,564	CY	10	186
	METALS				
	SHEET PILING	99,243	SF	25.00	2,481
	FOUNDATION PILING	1	JOB	SUM	318
	POST TENSIONING	2,030	LF	30	61
	STRUCTURAL STEEL	1	JOB	SUM	4,060
	05.60 GUIDEWALLS SUBTOTAL				28,778
09.	**CHANNEL WORK**	1	JOB	SUM	6,404
	PROJECT SUBTOTAL				178,534
	CONTINGENCIES 25%				44,634
	PROJECT SUBTOTAL WITH CONTINGENCIES				223,168
30.	**PLANNING, ENGINEERING, AND DESIGN (10%)**				22,000
31.	**CONSTRUCTION MANAGEMENT (10%)**				22,000
	PROJECT TOTAL				$ 267,000

LOCK AND DAM NO.17, LOCATION 4, TYPE C,
1200' LOCK ALTERNATIVE (PILE FOUNDED)

Subject	PILE FOUNDED LOCKS: 1200 ft lock L/D 17 Location 4 Quantities for Type C Lock	Date OCT 1996
Computed by Michael Cummings	Checked	Sheet 1 of 7

Gate Monolith
(typical)

Note: For quantities change the RED values in the cells of the dimensioned cross section shown.

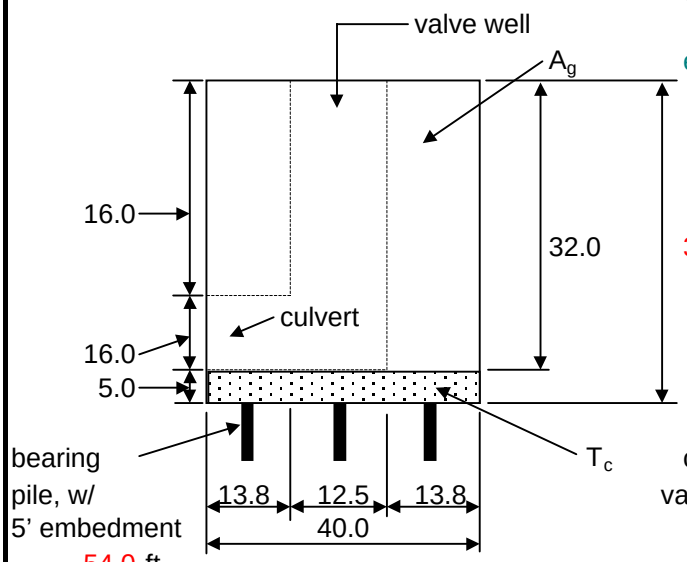

Cast in place concrete

A_g =	14,546.7	CY	U.S.
A_g =	17,561.5	CY	D.S.
Total =	32,108.1	CY	

Tremie concrete

T_c =	10,203.7	CY

The culverts are subtracted gross volume

	width	length	heighth	
culvert =	12.5	16.0	50.0	CF
valve well =	12.5	16.0	13.8	CF

54.0 ft

US gates length = 137.0 ft DS gates length = 164.5 ft

hght chk =	37.00	left
hght chk =	37.00	right

Lock Wall

Note: For quantities change the RED values in the cells of the dimensioned cross section

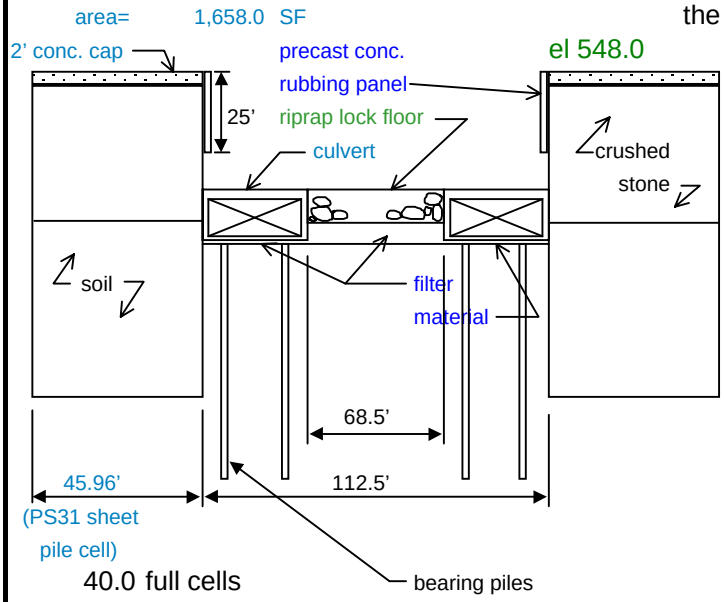

Cast-in-place concrete
2' concrete cap
Volume= 1,706.2 CY
Pre-cast concrete
precast rubbing panel
Area= 54,350.0 SF
Sheet pile cells
sheet piling
Area= 689,392.0 SF
Sheet pile cell fill
gravel
Volume= 137,499 CY

40.0 full cells
4.0 half cells
42.0 filler cells

84.0 ft total length 54.0 ft

RS Wall = 1,087.5 ft LS Wall = 1,087.5 ft

hght chk =	.00	left
hght chk =	.00	right

LOCK AND DAM NO.17, LOCATION 4, TYPE C,
1200' LOCK ALTERNATIVE (PILE FOUNDED)

Subject	PILE FOUNDED LOCKS: 1200 ft lock L/D 17 Location 4 Quantities for Type C Lock		Date OCT 1996
Computed by Michael Cummings		Checked	Sheet 2 of 7

Floor

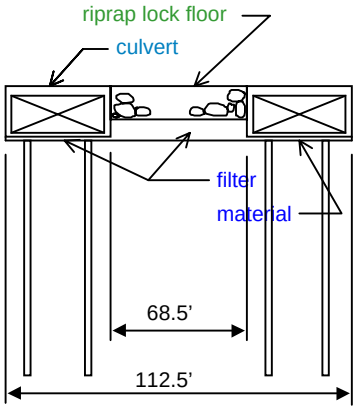

Riprap floor quantity
Volume= 11,956.7 CY
or 16,739.3 TONS

Filter material quantity
Volume= 12,932.1 CY
or 18,105.0 TONS

Bearing piles
precast floor slabs= 5,644.8 LF
precast culvert= 21,324.8 LF
Total Bearing Pile 26,969.6 LF

Length of floor = 1,270.0 ft width of floor = 73.0 ft

Note: For quantities change the RED values in the cells of the dimensioned cross section shown.

US Wall = 994.0 ft DS Wall = 1,016.0 ft

LOCK AND DAM NO.17, LOCATION 4, TYPE C,
1200' LOCK ALTERNATIVE (PILE FOUNDED)

Subject	PILE FOUNDED LOCKS: 1200 ft lock L/D 17 Location 4 Quantities for Type C Lock	Date OCT 1996
Computed by Michael Cummings	Checked	Sheet 3 of 7

cofferdam cell
typical
Area = 1,963.0 ft^2

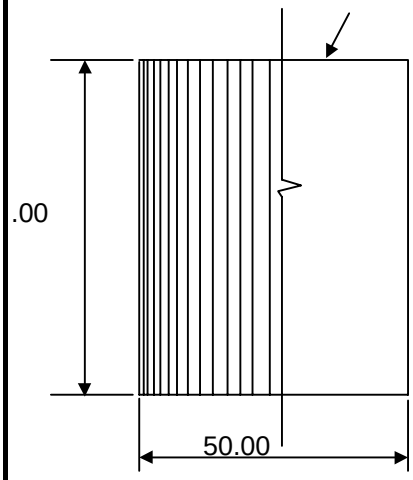

Note: For quantities change the RED values in the cells of the dimensioned cross section shown.

Pile type: PS31
Choose PSA23, PS27.5, or PS31

Area between cells:

Area =	855.0	SF
Distance =	15.91	ft
Length =	1.641	ft
Number in cell =	96	piles
No. in space =	21	piles

UPSTREAM

North or South length:	264.0	.4	modular numbers
East or West length:	330.0	.5	to aid in value search

DOWNSTREAM

North or South length:	264.0	.4	modular numbers
East or West length:	330.0	.5	to aid in value search

US	Total number of cells:	9.0	DS	Total number of cells:	9.0
US	Total number of cells:	11.0	DS	Total number of cells:	11.0

LOCK CHAMBER WALLS:

A. WALL MONOLITHS

1. River side walls
(a) Cast in place concrete
Volume = #REF! CY
(b) Tremie concrete
Volume = ######## CY
(c) Pre-cast concrete
Volume = .0 CY
(d) Pre-cast concrete (approach wall)
Volume = 0.0 CY
(e) Tremie concrete (approach wall)
Volume = - CY

1. Land side walls
(a) Cast in place concrete
Volume = #REF! CY
(b) Tremie concrete
Volume = ######## CY
(c) Pre-cast concrete
Volume = .0 CY
(d) Pre-cast concrete (approach wall)
Volume = 0.0 CY
(e) Tremie concrete (approach wall)
Volume = - CY

B. GATE MONOLITHS

1. Upstream cast in place concrete
Volume = 14,546.7 CY
Piles = 3200 LF

1. Downstream cast in place concrete
Volume = 17,561.5 CY
Piles = 3700 LF

LOCK AND DAM NO.17, LOCATION 4, TYPE C,
1200' LOCK ALTERNATIVE (PILE FOUNDED)

Subject	PILE FOUNDED LOCKS: 1200 ft lock L/D 17 Location 4 Quantities for Type C Lock	Date OCT 1996
Computed by Michael Cummings	Checked	Sheet 4 of 7

SILLS:

Length = 120.0 ft **Volume =** 7,893.0 CY of CIP concrete
111.0 ft
8.0 ft

COFFERDAM CELLS:

Upstream riverside
Total = piles
Total = SF of piling

Downstream riverside
Total = piles
Total = SF of piling

SUMMARY:

Lockwalls:

CONCRETE (Precast)
A. Lockwalls = - CY
B. Approach walls = - CY **Total =** - CY

CONCRETE (CIP, Cast in place)
A. Lockwalls = CY
B. Gate mono's = 32,108.1 CY
C. Sills = 7,893.0 CY **Total =** 40,100.0 CY

CONCRETE (Tremie)
A. Lockwalls = ########
B. Approach walls = - **Total =** ######## CY

HP PILING **Total =** .0 LF

BEARING PILES:
Total = 124,400.0 LF

Lock Floor:

CONCRETE:
A. Tremie concrete = .0 CY
B. Precast = .0 CY

BEARING PILES:
Total = 26,969.6 LF

Lockwall Sheet Pile Cells:

A. SHEETPILES
Total Area = 689,392 SF

B. FILL
Total Volume = 137,499 CY

LOCK AND DAM NO.17, LOCATION 4, TYPE C,
1200' LOCK ALTERNATIVE (PILE FOUNDED)

Subject	PILE FOUNDED LOCKS: L/D 17 Location 4 Quantities for Type C Lock	Date OCT 1996
Computed by Michael Cummings	Checked	Sheet 5 of 7

Upstream Guidewall Cell, Small

(typical)

Area = 700.0 SF

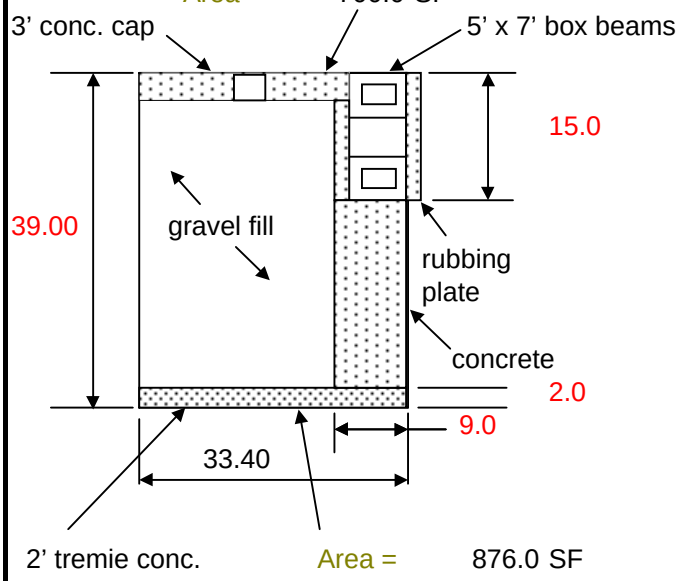

Area = 876.0 SF

Note: For quantities change the RED values in the cells of the dimensioned cross section shown.

Cast-in-Place Concrete			
3' conc. cap	=	77	CY
concrete	=	181	CY
Total	=	258	CY
for 7 cells	=	1,803	CY
Tremie concrete	=	65	CY
for 7 cells	=	455	CY
Precast Concrete			
5'x7' beam	=	889	CY
rubbing pl.	=	500	CY
Total	=	1,389	CY
Gravel fill	=	884	CY
for 7 cells	=	6,188	CY
Sheet Piling	=	4,092	SF
for 7 cells	=	28,646	SF

Upstream Guidewall Cell, Large

(typical)

Area = 2,124.0 SF

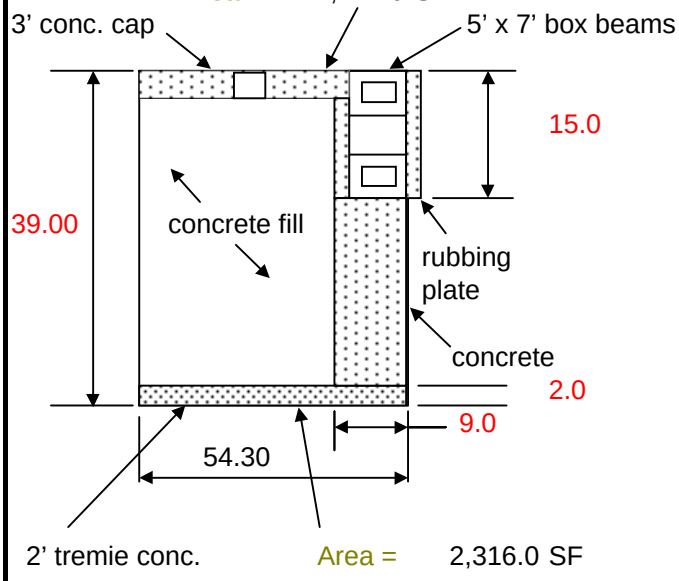

Area = 2,316.0 SF

Note: For quantities change the RED values in the cells of the dimensioned cross section shown.

Cast-in-Place Concrete			
3' conc. cap	=	235	CY
concrete	=	230	CY
Total	=	465	CY
Tremie concrete	=	172	CY
Permanent Cell Fill		2,673	CY
Sheet Piling	=	6,653	SF

LOCK AND DAM NO.17, LOCATION 4, TYPE C,
1200' LOCK ALTERNATIVE (PILE FOUNDED)

Subject	PILE FOUNDED LOCKS: L/D 17 Location 4 Quantities for Type C Lock	Date OCT 1996
Computed by Michael Cummings	Checked	Sheet 6 of 7

Downstream Guidewall Cell, Small

(typical)

Area = 700.0 SF

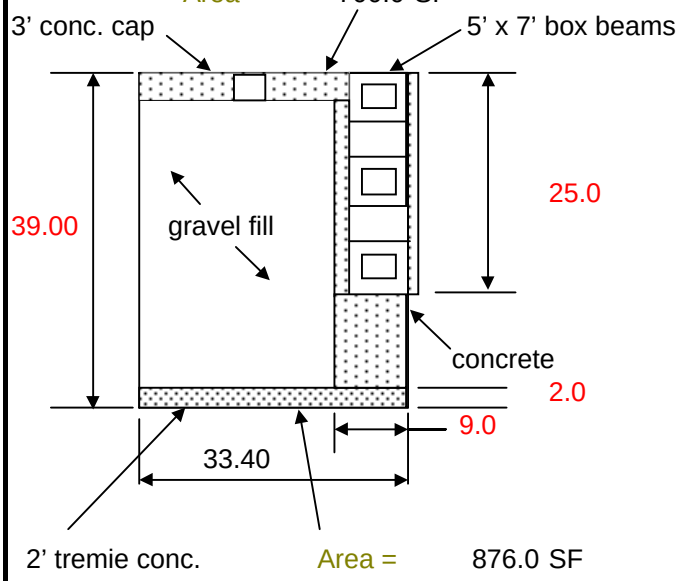

Area = 876.0 SF

Note: For quantities change the RED values in the cells of the dimensioned cross section shown.

Cast-in-Place Concrete			
3' conc. cap	=	77	CY
concrete	=	133	CY
Total	=	209	CY
for 14 cells	=	2,930	CY
Tremie concrete	=	65	CY
for 14 cells	=	910	CY
Precast Concrete			
5'x7' beam	=	2,667	CY
rubbing pl.	=	1,667	CY
Total	=	4,333	CY
Gravel fill	=	884	CY
for 14 cells	=	12,376	CY
Sheet Piling	=	4,092	SF
for 14 cells	=	57,291	SF

Downstream Guidewall Cell, Large

(typical)

Area = 2,124.0 SF

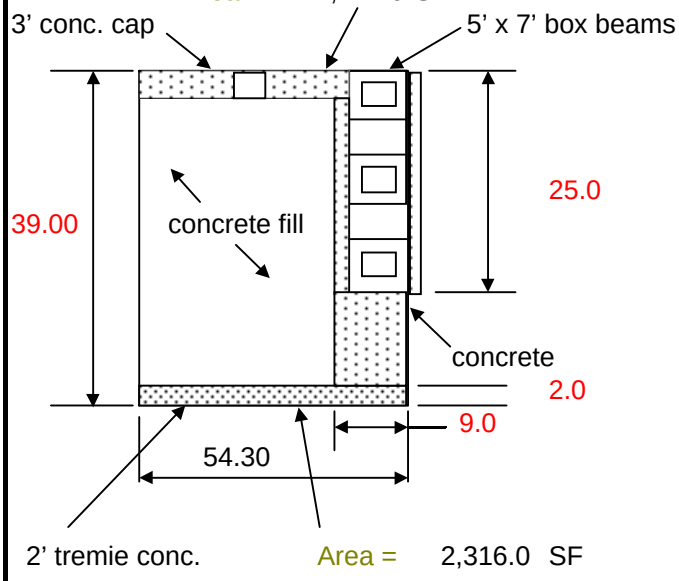

Area = 2,316.0 SF

Note: For quantities change the RED values in the cells of the dimensioned cross section shown.

Cast-in-Place Concrete			
3' conc. cap	=	235	CY
concrete	=	391	CY
Total	=	626	CY
Tremie concrete	=	172	CY
Permanent Cell Fill		2,673	CY
Sheet Piling	=	6,653	SF

LOCK AND DAM NO.17, LOCATION 4, TYPE C,
1200' LOCK ALTERNATIVE (PILE FOUNDED)

Subject	PILE FOUNDED LOCKS: L/D 17 Location 4 Quantities for Type C Lock	Date OCT 1996
Computed by Michael Cummings	Checked	Sheet 7 of 7

LOCK GUIDEWALLS :

A. UPSTREAM GUIDEWALL

1. Cast-in-place concrete

Volume = 2,269 CY

2. Precast concrete

Volume = 1,389 CY

3. Gravel Fill

Volume = 6,188 CY

4. Sheet Piling

Area = 35,299 SF

5. Permanent Cell Fill

Volume = 2,673 CY

6. Tremie Concrete

Volume = 627 CY

B. DOWNSTREAM GUIDEWALL

1. Cast-in-place concrete

Volume = 3,556 CY

2. Precast concrete

Volume = 4,333 CY

3. Gravel Fill

Volume = 12,376 CY

4. Sheet Piling

Area = 63,944 SF

5. Permanent Cell Fill

Volume = 2,673 CY

6. Tremie Concrete

Volume = 1,082 CY

Guidewall Summary

Total Cast-in-Place Concrete	5,825	CY
Total Precast Concrete	5,722	CY
Total Gravel Fill	18,564	CY
Total Sheet Piling	99,243	SF
Total Permanent Cell Fill	5,347	CY
Total Tremie Concrete	1,709	CY

LOCK AND DAM NO. 16, LOCATION 2, TYPE B
(PILE-FOUNDED)

CCOUNT CODE	ITEM	QUANTITY	UNIT	UNIT PRICE ($'s)	AMOUNT ($1,000's)
01.	**LANDS AND DAMAGES**				
	REAL ESTATE	1	JOB	SUM	212
04.	**DAMS**				
	04 DAMS SUBTOTAL				0
05.	**LOCKS**				
	SITEWORK				
	MOBILIZATION	1	JOB	SUM	10,650
	DEMOLITION	1	JOB	SUM	1,910
	EXCAVATION	27,090	CY	4.5	122
	BACKFILL	22,000	CY	6.25	138
	WALL FILL	7,035	CY	10.00	70
	SCOUR PROTECTION	429	TN	20.00	9
	SCOUR STONE IN LOCK FLOOR	9,030	TN	25.00	226
	FOUNDATION/LOCK DEWATERING	1	JOB	SUM	3,000
	MARINE FACILITIES, TEMP. MOORING STR.	1	JOB	SUM	3,900
	CONCRETE				
	UNDERBASE GROUTING	5,297	CY	200	1,059
	CAST IN PLACE REINFORCED CONCRETE	44,982	CY	217	9,761
	PRECAST CONCRETE	8,802	CY	400	3,521
	TREMIE CONCRETE	5,651	CY	165	932
	POST TENSION STEEL	135,000	LB	2.5	338
	FURNISH AND SET LANDING PADS	74	EA	19000	1,406
	SET PRECAST WALL UNITS	28	EA	16000	448
	FLOAT IN AND SET FLOOR UNITS	26	EA	16000	416
	FLOAT IN AND SET MITER GATE SILL	1	JOB	SUM	140
	STEEL REINFORCEMENT	2,699,000	LB	0.75	2,024
	METALS				
	SHEET PILING	53,840	SF	21.52	1,159
	WALL UNIT BRACING	1	JOB	SUM	250
	FOUNDATION PILING AND TESTING	1	JOB	SUM	5,300
	STRUCTURAL STEEL (GATES, VALVES, TRASHRACKS, BU	1	JOB	SUM	11,613
	STRUCTURAL STEEL (MISCELLANEOUS - LADDERS, ETC.	1	JOB	SUM	3,040
	ELECTRICAL				
	ELECTRICAL SYSTEM	1	JOB	SUM	4,700
	INSTRUMENTATION	1	JOB	SUM	1,250
	MECHANICAL				
	GATE AND VALVE OPERATING MACHINERY	1	JOB	SUM	2,750
	MECHANICAL SYSTEMS	1	JOB	SUM	3,200
	MISCELLANEOUS	1	JOB	SUM	1,950
	05 LOCKS SUBTOTAL				75,281
05.60.	**GUIDEWALLS**				
	SITEWORK				
	EXCAVATION	118,490	CY	4.5	533
	BACKFILL	73,640	CY	10	736
	SCOUR PROTECTION	18,900	TON	15	284
	CONCRETE				
	42" DIAMETER PILES	1,769	LF	400	708
	CAST IN PLACE REINFORCED CONCRETE	1,570	CY	150	236
	PRECAST BEAMS	10,900	CY	500	5,450
	PRECAST BEAM SEATS	165	CY	1000	165
	TREMIE CONCRETE	130	CY	500	65
	PERMANENT CELL FILL (C0NCRETE)	13,857	CY	200	2,771
	GROUT FOR BEAMS	490	CY	1000	490
	STEEL REINFORCEMENT	1,840,000	LB	0.75	1,380
	GRAVEL FILL	27,229	CY	10	272
	METALS				
	SHEET PILING FOR CELLS (PS31)	169,872	SF	25.00	4,247
	SHEET PILE CUTOFF WALL (PZ35)	60,000	SF	30.00	1,800
	FOUNDATION PILING		JOB	SUM	318
	POST TENSIONING	1,280	LF	30	38
	STRUCTURAL STEEL	1	JOB	SUM	4,060
	05.60 GUIDEWALLS SUBTOTAL				23,553
09.	**CHANNEL WORK**	1	JOB	SUM	9,090
	PROJECT SUBTOTAL				108,136
	CONTINGENCIES 25%				27,034
	PROJECT SUBTOTAL WITH CONTINGENCIES				135,000
30.	**PLANNING, ENGINEERING, AND DESIGN (10%)**				14,000
31.	**CONSTRUCTION MANAGEMENT (10%)**				14,000
	PROJECT TOTAL				$ 163,000

		QUANTITY CALCULATIONS									
	L/D 16 Location 2, Type B, Pile Founded							Sheet 1_ of 3____			
1	Remove existing sill down to										
	elev. 405.33	25	x	2	x	110	=	5,500.00	CF	203.70	CY
2	Remove existing 2' thick slab	95.25	x	2	x	110	=	20,955.00	CF	776.11	CY
3	Demolish existing guidewall, to										
	include timber crib and pile	502	x	30	x	53	=	798,180.00	CF	29,562.22	CY
4	Install sheet piling, PZ27	40.0	x	673	x	2	=	53,840.00	SF		
5	Excavation	6.3	x	172		675	=	731,430.00	CF	27,090.00	CY
6	Place scour stone	1.5	x	172	x	675	=	174,150.00	CF	6,450.00	CY
7	Place scour protection (riprap)	3	x	25	x	110	=	8,250.00	CF	305.56	CY
8	Install piling, HP 14 x 89										
	(54 ea per monolith @ 50' long										
	for 28 monoliths)	54	x	50	x	28	=	75,600.00	LF		
	Lockwall/floor connection										
9	HP14 x 117 stud w/welded ribs	23	x	2	=	46	EA				
	thixotropic grout @ HP studs	23.5	x	46	=	1,081.00	CF				
	thixotropic grout @ joints per ft	0.25	x	5	x	1296	=	1,620.00	CF		
10	Grout under base filling	2	x	650	x	110	=	143,000.00	CF	5,296.30	CY
11	Install piling, HP 14 x 89										
	(5 ea per floor unit @ 45' long										
	for 26 floor units	5	x	45	x	26	=	5,850.00	LF		
							=	26	EA		
12	Sand infill of floor units, large	((9.25' x 6.25' x2)+(19.75' x 6.25' x 4))x 510'					=	310,794.00	CF		
	" " " " " , small	((9.25' x 3' x 2)+(19.75' x 3' x 4)) x 66'					=	19,305.00	CF		
								330,099.00	CF	12,225.89	CY
13	Concrete										
	riverward wall										
	-bottom lift (tremie)	5.5	x	23	x	603	=	76,279.50	CF		
	-2nd lift (reinforced)	4	x	28	x	603	=	67,536.00	CF		
	-3rd lift (reinforced)inside	13.5	x	7.75	x	603	=	63,088.88	CF		
	- " " " outside	13.5	x	7.75	x	603	=	63,088.88	CF		
	-4th lift (reinforced)	8.5	x	26	x	603	=	133,263.00	CF		
	-5th lift (reinforced)inside	8.3	x	28	x	603	=	140,137.20	CF		
	-5th lift (reinforced)outside	8.3	x	28	x	603	=	140,137.20	CF		
14	Concrete							683,530.65	CF	25,315.95	CY
	landward wall										
	-bottom lift (tremie)	5.5	x	23	x	603	=	76,279.50	CF		
	-2nd lift (reinforced)	4	x	28	x	603	=	67,536.00	CF		
	-3rd lift (reinforced)inside	13.5	x	7.75	x	603	=	63,088.88	CF		
	- " " " outside	13.5	x	7.75	x	603	=	63,088.88	CF		
	-4th lift (reinforced)	8.5	x	26	x	603	=	133,263.00	CF		
	-5th lift (reinforced)inside	8.3	x	28	x	603	=	140,137.20	CF		
	-5th lift (reinforced)outside	8.3	x	28	x	603	=	140,137.20	CF		
								683,530.65	CF	25,315.95	CY
	Total Concrete									50,631.90	CY

LOCK AND DAM NO. 16, LOCATION 2, TYPE C
(PILE-FOUNDED)

CCOUNT CODE	ITEM	QUANTITY	UNIT	UNIT PRICE ($'s)	AMOUNT ($1,000's)
01.	**LANDS AND DAMAGES**				
	REAL ESTATE	1	JOB	SUM	212
04.	**DAMS**				
	04 DAMS SUBTOTAL				0
05.	**LOCKS**				
	SITEWORK				
	MOBILIZATION	1	JOB	SUM	10,650
	DEMOLITION	1	JOB	SUM	1,910
	EXCAVATION	23,131	CY	4.5	104
	BACKFILL	19,700	CY	10.00	197
	SCOUR PROTECTION	2,000	TN	15.00	30
	SCOUR STONE IN LOCK FLOOR	16,860	TN	15.00	253
	GRAVEL FILTER IN LOCK FLOOR	16,090	TN	20.00	322
	FOUNDATION/LOCK DEWATERING	1	JOB	SUM	3,000
	MARINE FACILITIES, TEMP. MOORING STR.	1	JOB	SUM	3,900
	CONCRETE				
	STRUCTURAL GROUTING	700	CY	200	140
	CAST IN PLACE REINFORCED CONCRETE	32,569	CY	217	7,067
	CAST IN PLACE CONNECTIONS	200	CY	725	145
	PRECAST CONCRETE	9,917	CY	400	3,967
	TREMIE CONCRETE, BASE .	3,574	CY	165	590
	PRECAST FLOOR PANELS	8,210	CY	286	2,348
	POST TENSION STEEL	185,300	LB	2.5	463
	FURNISH AND SET LANDING PADS	74	EA	19000	1,406
	SET PRECAST WALL UNITS	28	EA	16000	448
	FLOAT IN AND SET MITER GATE SILL	1	JOB	SUM	140
	STEEL REINFORCEMENT	1,954,000	LB	0.75	1,466
	METALS				
	SHEET PILING	47,110	SF	21.52	1,014
	WALL UNIT BRACING	1	JOB	SUM	250
	FOUNDATION PILING AND TESTING	1	JOB	SUM	3,487
	STRUCTURAL STEEL (GATES, VALVES, TRASHRACKS, B	1	JOB	SUM	11,613
	STRUCTURAL STEEL (MISCELLANEOUS - LADDERS, ET	1	JOB	SUM	3,040
	ELECTRICAL				
	ELECTRICAL SYSTEM	1	JOB	SUM	4,700
	INSTRUMENTATION	1	JOB	SUM	1,250
	MECHANICAL				
	GATE AND VALVE OPERATING MACHINERY	1	JOB	SUM	2,750
	MECHANICAL SYSTEMS	1	JOB	SUM	3,200
	MISCELLANEOUS	1	JOB	SUM	1,950
	05 LOCKS SUBTOTAL				71,799
05.60.	**GUIDEWALLS**				
	SITEWORK				
	EXCAVATION	118,490	CY	4.5	533
	BACKFILL	73,640	CY	10	736
	SCOUR PROTECTION	18,900	TON	15	284
	CONCRETE				
	42" DIAMETER PILES	1,769	LF	400	708
	CAST IN PLACE REINFORCED CONCRETE	1,570	CY	150	236
	PRECAST BEAMS	10,900	CY	500	5,450
	PRECAST BEAM SEATS	165	CY	1000	165
	TREMIE CONCRETE	130	CY	500	65
	PERMANENT CELL FILL (C0NCRETE)	13,857	CY	200	2,771
	GROUT FOR BEAMS	490	CY	1000	490
	STEEL REINFORCEMENT	1,840,000	LB	0.75	1,380
	GRAVEL FILL	27,229	CY	10	272
	METALS				
	SHEET PILING FOR CELLS (PS31)	169,872	SF	25.00	4,247
	SHEET PILE CUTOFF WALL (PZ35)	68,279	SF	30.00	2,048
	FOUNDATION PILING	1	JOB	SUM	318
	POST TENSIONING	1,280	LF	30	38
	STRUCTURAL STEEL	1	JOB	SUM	4,060
	05.60 GUIDEWALLS SUBTOTAL				23,801
09.	**CHANNEL WORK**	1	JOB	SUM	9,090
	PROJECT SUBTOTAL				104,903
	CONTINGENCIES 25%				26,226
	PROJECT SUBTOTAL WITH CONTINGENCIES				131,000
30.	**PLANNING, ENGINEERING, AND DESIGN (10%)**				13,000
31.	**CONSTRUCTION MANAGEMENT (10%)**				13,000
	PROJECT TOTAL				$ 157,000

		QUANTITY CALCULATIONS									
	L/D 16, Location 2, Type C, Pile Founded							Sheet 1_ of	3_		
1	Remove existing sill down to										
	elev. 577.83	25	x	2	x	110	=	5,500.00	CF	203.70	CY
2	Remove existing 2' thick slab	95.25	x	2	x	110	=	20,955.00	CF	776.11	CY
3	Demolish existing guidewall, to	502	x	30	x	53	=	798,180.00	CF	29,562.22	CY
	include timber crib and pile										
4	Install sheet piling, PZ27	35	x	673	x	2	=	47,110.00	SF		
5	Place scour stone (under walls)	1.5	x	60	x	600	=	54,000.00	CF	2,000.00	CY
6	Excavation	9.4	x	110	x	604	=	624,536.00	CF	23,130.96	CY
7	Install piling, HP 14 x 89										
	(24 ea per monolith @50' long										
	for 28 monoliths)	24	x	50	x	28	=	33,600.00	LF		
8	Steel footing box(1/2"steel plate)										
	riverward wall										
	20.42 lb x [(6'x3'x2)+(4'x3'x2)]=1,225 LB @ 30 locations							36,750.00	LB		
	landward wall										
	20.42 lb x [(6'x3'x2)+(4'x3'x2)]=1,225 LB @ 30 location							36,750.00	LB		
								73,500.00	LB		
9	Install piling, HP 14 x 89								or	2,722.22	TN
	for chamber floor paving blocks										
	(7 ea per joint @ 50' for 14 ea										
	joints)	53	x	7	x	14	=	5,194.00	LF		
10	Scour stone, (removed prior to										
	floor construction)	3	x	110	x	580	=	191,400.00	CF	7,088.89	CY
11	Filter layer	2	x	110	x	580	=	127,600.00	CF	4,725.93	CY
12	Filter gravel	2	x	110	x	580	=	127,600.00	CF	4,725.93	CY
13	Paving blocks (3'x30'x14')										
	1,260cf @ 8/row x 18 rows	1,260	x	8	x	18	=	181,440.00	CF	6,720.00	CY
14	Structural steel (per cell unit)										
	- W18 x 86 waler	86	x	154	=	13,244.00					
	- W18 x 86 brace	86	x	22	=	1,892.00					
	- C12 x 25 diagonal brace	25	x	232	=	5,800.00					
	(There are 30 cell units, 15 in each wall)					20,936.00	x	30	=	628,080.00	LB
									or	314.04	TN
15	Precast liner										
	riverward wall	21.8	x	603	x	1	=	13,145.40	CF		
	landward wall	21.8	x	603	x	1	=	13,145.40	CF		
								26,290.80	CF		
									or	973.73	CY
16	Precast concrete miter gate sill										
	and wall monoliths										
	Taken from quantity calc's from St. Paul District's Microstation analysis										
						- Slab volume			=	1,434.50	CY
						- Wall volume			=	771.32	CY
						- Concrete strut volume			=	17.25	CY
	Total Precast Concrete Volume for Miter Gate Sill & Wall Monoliths								=	2,223.07	CY
											Ld16cpf

LOCK AND DAM NO. 16, LOCATION 3, TYPE B
1200' LOCK ALTERNATIVE (ROCK FOUNDED)

ACCOUNT CODE	ITEM	QUANTITY	UNIT	UNIT PRICE ($'s)	AMOUNT ($1,000's)
01.	**LANDS AND DAMAGES**				
	REAL ESTATE	1	JOB	SUM	230
04.	**DAMS**				
	REMOVAL OF EXISTING STRUCTURES	1	JOB	SUM	150
	04 DAMS SUBTOTAL				150
05.	**LOCKS**				
	SITEWORK				
	MOBILIZATION	1	JOB	SUM	10,650
	DEMOLITION	1	JOB	SUM	1,910
	EXCAVATION	48,960	CY	6.25	306
	FOUNDATION FILL AT SCOUR HOLE	7,093	CY	18.75	133
	WALL FILL	15,760	CY	10.00	158
	CAPSTONE	52,660	TN	25.00	1,317
	RIPRAP	33,380	TN	20.00	668
	LEVELING STONE IN LOCK FLOOR	4,580	TN	15.00	69
	GRAVEL FILTER IN LOCK FLOOR	16,606	TN	15.00	249
	GEOTEXTILE	13,740	SY	6.00	82
	FOUNDATION/LOCK DEWATERING	1	JOB	SUM	3,000
	MARINE FACILITIES, TEMP. MOORING STR.	1	JOB	SUM	3,900
	CONCRETE				
	STRUCTURAL GROUTING	450	CY	200	90
	CAST IN PLACE REINFORCED CONCRETE	58,200	CY	217	12,629
	CAST IN PLACE CONNECTIONS	964	CY	725	699
	PRECAST CONCRETE	9,400	CY	400	3,760
	TREMIE CONCRETE, BASE .	10,340	CY	165	1,706
	PRECAST FLOOR PAVERS AND STRUTS	15,450	CY	286	4,419
	SET PRECAST FLOOR BEAMS	31	EA	16000	496
	SET FLOOR PANELS	62	EA	10000	620
	STEEL REINFORCEMENT	7,614,000	LB	0.75	5,711
	METALS				
	SHEET PILING	30,200	SF	35.80	1,081
	SHEET PILE BRACING	1	JOB	SUM	350
	FOUNDATION PILING AND TESTING	209,190	LF	39.75	8,315
	STRUCTURAL STEEL (GATES, VALVES, ETC.)	1	JOB	SUM	11,613
	STRUCTURAL STEEL (MISCELLANEOUS - LADDERS, ETC.)	1	JOB	SUM	3,040
	ELECTRICAL				
	ELECTRICAL SYSTEM		JOB	SUM	4,700
	INSTRUMENTATION	1	JOB	SUM	1,250
	MECHANICAL				
	GATE AND VALVE OPERATING MACHINERY	1	JOB	SUM	2,750
	MECHANICAL SYSTEMS	1	JOB	SUM	3,200
	MISCELLANEOUS	1	JOB	SUM	1,950
	05 LOCKS SUBTOTAL				90,820

LOCK AND DAM NO. 16, LOCATION 3, TYPE B
1200' LOCK ALTERNATIVE (ROCK FOUNDED)

05.60.	GUIDEWALLS				
	SITEWORK				
	EXCAVATION	118,490	CY	4.5	533
	BACKFILL	73,640	CY	10	736
	SCOUR PROTECTION	46,350	TON	15	695
	CONCRETE				
	42" DIAMETER PILES	6,360	LF	400	2,544
	CAST IN PLACE REINFORCED CONCRETE	5,874	CY	150	881
	PRECAST BEAMS	17,325	CY	500	8,663
	PRECAST BEAM SEATS	262	CY	1000	262
	TREMIE CONCRETE	1,709	CY	500	855
	PERMANENT CELL FILL (C0NCRETE)	5,394	CY	200	1,079
	GROUT FOR BEAMS	778	CY	1000	778
	STEEL REINFORCEMENT	2,921,700	LB	0.75	2,191
	GRAVEL FILL	18,728	CY	10	187
	METALS				
	SHEET PILING	100,006	SF	25.00	2,500
	FOUNDATION PILING	1	JOB	SUM	318
	POST TENSIONING	2,030	LF	30	61
	STRUCTURAL STEEL	1	JOB	SUM	4,060
	05.60 GUIDEWALLS SUBTOTAL				26,343
09.	CHANNEL WORK	1	JOB	SUM	1,350
	PROJECT SUBTOTAL				118,894
	CONTINGENCIES 25%				29,723
	PROJECT SUBTOTAL WITH CONTINGENCIES				148,617
30.	PLANNING, ENGINEERING, AND DESIGN (10%)				15,000
31.	CONSTRUCTION MANAGEMENT (10%)				15,000
	PROJECT TOTAL				$ 179,000

Subject	ROCK FOUNDED LOCKS: L/D 16 Location 3 Quantities for Type B Lock, Crane-In Construction	Date SEP 96
Computed by Michael Cummings	Checked	Sheet 1 of 6

Crane - In Gate Monolith

Note: For quantities change the Red values in the cells of the dimensioned cross section shown.

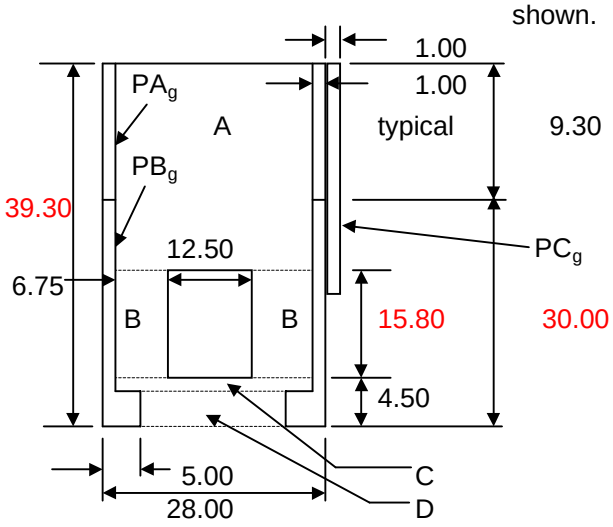

Cast in place concrete

A_g =	494.0	SF	
B_g =	213.3	SF	
C_g =	26.0	SF	
D_g =	63.0	SF	CULVERT
Total =	796.3	SF	

Pre-cast concrete

PA_g =	18.6	SF
PB_g =	88.0	SF
PC_g =	18.5	SF
Total =	125.1	SF

hght chk = 39.30 left
hght chk = 39.30 right

US lngth = .0 ft DS lngth = 250.0 ft

Crane - in Lock Wall

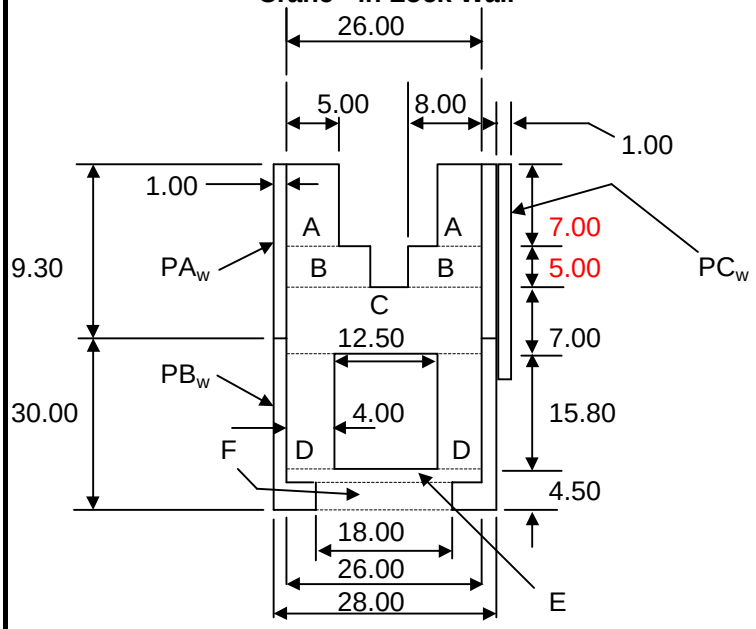

Cast in place concrete

A_w =	70.00	SF	
B_w =	80.00	SF	
C_w =	182.00	SF	
D_w =	213.30	SF	
E_w =	26.00	SF	CULVERT
F_w =	63.00	SF	
Total =	634.30	SF	

Pre-cast concrete

PA_w =	18.6	SF
PB_w =	88.0	SF
PC_w =	18.5	SF
Total =	125.1	SF

hght chk = 39.30 left
hght chk = 39.30 right

RS Wall = 998.0 ft LS Wall = 515.0 ft

Ld163bp

Subject		Date
L/D 16 Location 3 Quantities for Type B Lock, Crane-In Construction		SEP 96
Computed by Michael Cummings	Checked	Sheet 2 of 6

Typical cell for cofferdam

Area = 1,963.0 ft^2

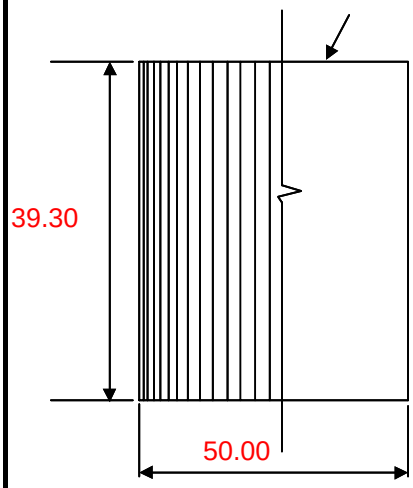

Pile type: ps31
Choose PSA23, PS27.5, or PS31

Area between cells:

Area =	855.0	ft^2
Distance =	15.91	ft
Length =	1.64	ft
Number in cell =	96	piles
No. in space =	21	piles
US Length =	110.0	ft
DS Length =	110.0	ft

LOCK CHAMBER WALLS:

A. WALL MONOLITHS

1. River side walls

(a) Cast in place concrete

Volume = 23,445.6 CY

(b) Precast concrete

Volume = 4,624.1 CY

1. Land side walls

(a) Cast in place concrete

Volume = 12,098.7 CY

(b) Precast concrete

Volume = 2,386.2 CY

B. GATE MONOLITHS

1. Upstream cast in place concrete

Volume = .0 CY

2. Upstream precast concrete

Volume = .0 CY

1. Downstream cast in place concrete

Volume = 14,746.3 CY

2. Downstream precast concrete

Volume = 2,316.7 CY

Subject		Date
L/D 16 Location 3 Quantities for Type B Lock, Crane-In Construcion		SEP 96
Computed by Michael Cummings	Checked	Sheet 3 of 6

COFFERDAMS:

1. Cofferdam #1, Upstream

Number = 2.0 cells

Total = 468.0 piles

2. Cofferdam #2, Downstream

Number = 2.0 cells

Total = 16,407.0 CY fill volume

SILLS:

Length = 120.0 ft
Width = 111.0 ft
Height = 8.0 ft

Volume = 7,893.3 CY

SUMMARY:

CONCRETE (Cast in place)

A.	Lockwalls =	35,544.3 CY
B.	Gate monoliths =	14,746.3 CY
C.	Sills =	7,893.3 CY
	Total =	58,200.0 CY

PRECAST CONCRETE

A.	Lockwalls =	7,010.2 CY
B.	Gate monoliths =	2,316.7 CY
	Total =	9,400.0 CY

SHEETPILES

A.	Required number for cofferdams =	468.0 piles
	Total =	500.0 CY
	Total =	30,200.0 SF of piling

FILL

A.	Required fill for cofferdams =	16,407.0 CY
	Total =	16,500.0 CY

Subject		Date
L/D 16 Location 3 Quantities for Type B Lock, Crane-In Construcion		SEP 96
Computed by Michael Cummings	Checked	Sheet 4 of 6

Upstream Guidewall Cell, Small

(typical)

Area = 700.0 SF

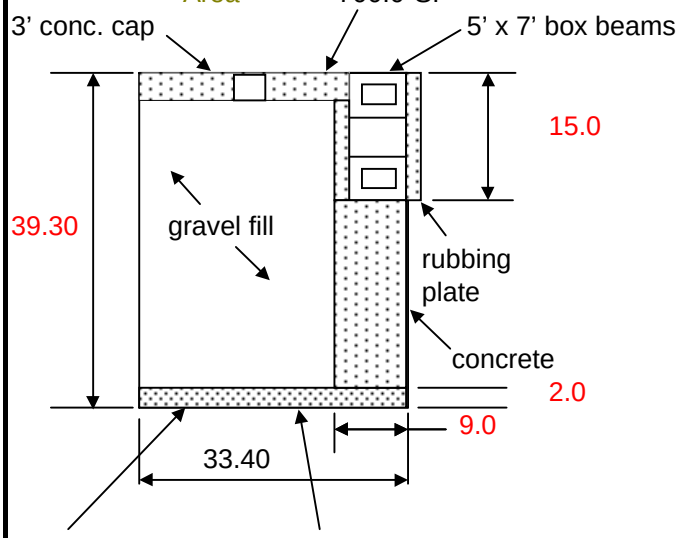

Area = 876.0 SF

Note: For quantities change the RED values in the cells of the dimensioned cross section shown.

Cast-in-Place Concrete

3' conc. cap	=	77	CY
concrete	=	183	CY
Total	=	260	CY
for 7 cells	=	1,818	CY
Tremie concrete	=	65	CY
for 7 cells	=	455	CY

Precast Concrete

5'x7' beam	=	889	CY
rubbing pl.	=	500	CY
Total	=	1,389	CY
Gravel fill	=	892	CY
for 7 cells	=	6,243	CY
Sheet Piling	=	4,124	SF
for 7 cells	=	28,866	SF

Upstream Guidewall Cell, Large

(typical)

Area = 2,124.0 SF

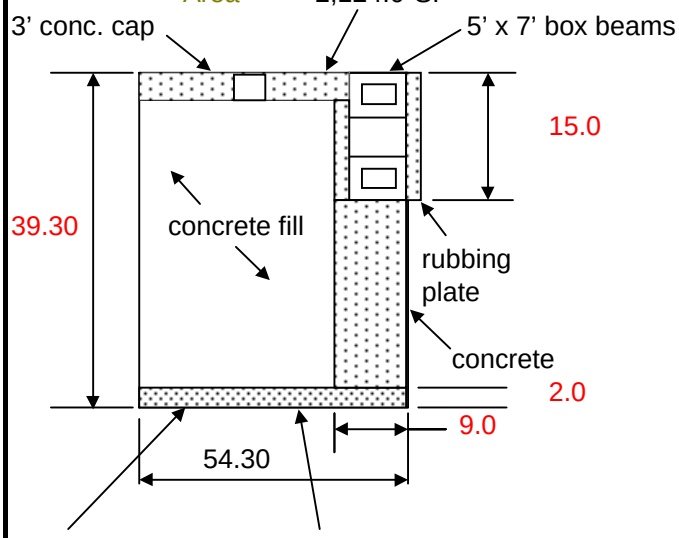

Area = 2,316.0 SF

Note: For quantities change the RED values in the cells of the dimensioned cross section shown.

Cast-in-Place Concrete

3' conc. cap	=	235	CY
concrete	=	233	CY
Total	=	468	CY
Tremie concrete	=	172	CY
Permanent Cell Fill		2,697	CY
Sheet Piling	=	6,704	SF

Subject		Date
L/D 16 Location 3 Quantities for Type B Lock, Crane-In Construcion		SEP 96
Computed by Michael Cummings	Checked	Sheet 5 of 6

Downstream Guidewall Cell, Small

(typical)

Area = 700.0 SF

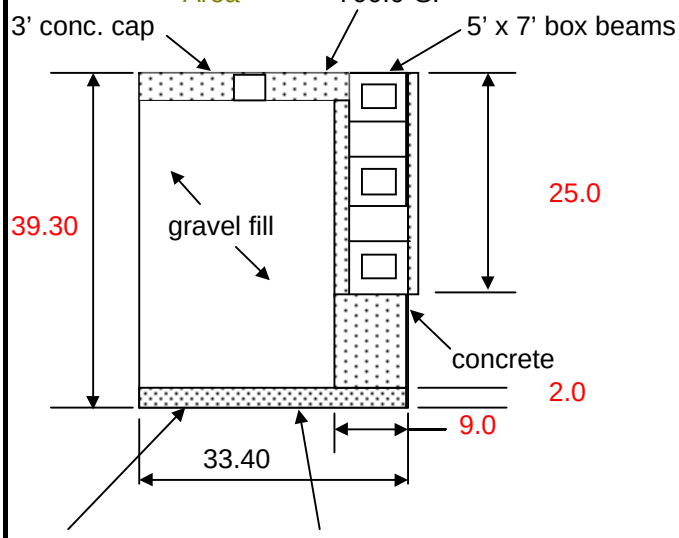

Area = 876.0 SF

Note: For quantities change the RED values in the cells of the dimensioned cross section shown.

Cast-in-Place Concrete			
3' conc. cap	=	77	CY
concrete	=	135	CY
Total	=	211	CY
for 14 cells	=	2,959	CY
Tremie concrete	=	65	CY
for 14 cells	=	910	CY
Precast Concrete			
5'x7' beam	=	2,667	CY
rubbing pl.	=	1,667	CY
Total	=	4,333	CY
Gravel fill	=	892	CY
for 14 cells	=	12,485	CY
Sheet Piling	=	4,124	SF
for 14 cells	=	57,732	SF

Downstream Guidewall Cell, Large

(typical)

Area = 2,124.0 SF

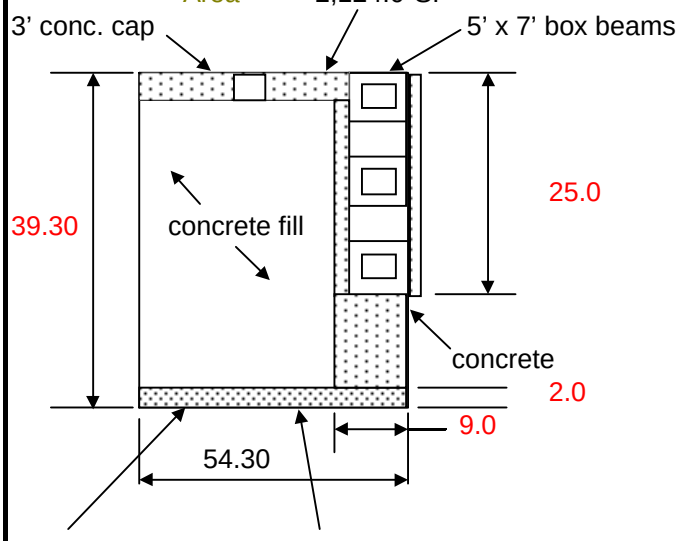

Area = 2,316.0 SF

Note: For quantities change the RED values in the cells of the dimensioned cross section shown.

Cast-in-Place Concrete			
3' conc. cap	=	235	CY
concrete	=	394	CY
Total	=	629	CY
Tremie concrete	=	172	CY
Permanent Cell Fill		2,697	CY
Sheet Piling	=	6,704	SF

Subject		Date
L/D16 Location 3 Quantities for Type B Lock, Crane-In Construcion		SEP 96
Computed by Michael Cummings	Checked	Sheet 6 of 6

LOCK GUIDEWALLS :

A. UPSTREAM GUIDEWALL

1. Cast-in-place concrete

Volume = 2,286 CY

2. Precast concrete

Volume = 1,389 CY

3. Gravel Fill

Volume = 6,243 CY

4. Sheet Piling

Area = 35,570 SF

5. Permanent Cell Fill

Volume = 2,697 CY

6. Tremie Concrete

Volume = 627 CY

B. DOWNSTREAM GUIDEWALL

1. Cast-in-place concrete

Volume = 3,588 CY

2. Precast concrete

Volume = 4,333 CY

3. Gravel Fill

Volume = 12,485 CY

4. Sheet Piling

Area = 64,436 SF

5. Permanent Cell Fill

Volume = 2,697 CY

6. Tremie Concrete

Volume = 1,082 CY

Guidewall Summary

Total Cast-in-Place Concrete	5,874	CY
Total Precast Concrete	5,722	CY
Total Gravel Fill	18,728	CY
Total Sheet Piling	100,006	SF
Total Permanent Cell Fill	5,394	CY
Total Tremie Concrete	1,709	CY

LOCK AND DAM NO. 16, LOCATION 3, TYPE C
1200' LOCK ALTERNATIVE (PILE FOUNDED)

CCOUNT CODE	L/D 16	QUANTITY	UNIT	NIT PRICE ($'s)	AMOUNT ($1,000's)
01.	**LANDS AND DAMAGES**				
	REAL ESTATE	1	JOB	SUM	210
04.	**DAMS**				
	REMOVAL OF EXISTING STRUCTURES	1	JOB	SUM	2,150
	04 DAMS SUBTOTAL				2,150
05.	**LOCKS**				
	SITEWORK				
	MOBILIZATION	1	JOB	SUM	10,650
	DEMOLITION	1	JOB	SUM	1,910
	EXCAVATION	117,100	CY	6.25	732
	FOUNDATION FILL AT SCOUR HOLE	3,200	CY	18.75	60
	WALL FILL	15,760	CY	10.00	158
	CAPSTONE	52,660	TN	25.00	1,317
	RIPRAP	33,380	TN	20.00	668
	LEVELING STONE IN LOCK FLOOR	4,580	TN	15.00	69
	GRAVEL FILTER IN LOCK FLOOR	16,606	TN	15.00	249
	GEOTEXTILE	13,740	SY	6.00	82
	FOUNDATION/LOCK DEWATERING	1	JOB	SUM	3,000
	MARINE FACILITIES, TEMP. MOORING STR.	1	JOB	SUM	3,900
	CONCRETE				
	STRUCTURAL GROUTING	450	CY	200	90
	CAST IN PLACE REINFORCED CONCRETE	57,500	CY	217	12,478
	CAST IN PLACE CONNECTIONS	964	CY	725	699
	PRECAST CONCRETE	2,744	CY	400	1,098
	TREMIE CONCRETE	9,135	CY	165	1,507
	PRECAST FLOOR PAVERS AND STRUTS	15,450	CY	286	4,419
	SET PRECAST FLOOR BEAMS	31	EA	16000	496
	SET FLOOR PANELS	62	EA	10000	620
	STEEL REINFORCEMENT	6,440,000	LB	0.75	4,830
	METALS				
	SHEET PILING	260,100	SF	35.80	9,312
	SHEET PILE BRACING	1	JOB	SUM	350
	FOUNDATION PILING AND TESTING	222,300	LF	39.75	8,836
	STRUCTURAL STEEL (GATES, VALVES, TRASH	1	JOB	SUM	11,613
	STRUCTURAL STEEL (MISCELLANEOUS - LAD	1	JOB	SUM	3,040
	ELECTRICAL				
	ELECTRICAL SYSTEM	1	JOB	SUM	4,700
	INSTRUMENTATION	1	JOB	SUM	1,250
	MECHANICAL				
	GATE AND VALVE OPERATING MACHINERY	1	JOB	SUM	2,750
	MECHANICAL SYSTEMS	1	JOB	SUM	3,200
	MISCELLANEOUS	1	JOB	SUM	1,950
	05 LOCKS SUBTOTAL				96,031

LOCK AND DAM NO. 16, LOCATION 3, TYPE C
1200' LOCK ALTERNATIVE (PILE FOUNDED)

05.60.	**GUIDEWALLS**				
	SITEWORK				
	~~EXCAVATION~~ *(Included in Channel Work)*	0	CY	4.5	0
	~~BACKFILL~~ *None*	0	CY	10	0
	SCOUR PROTECTION	37,312	TON	15	560
	CONCRETE				
	42" DIAMETER PILES	5,120	LF	400	2,048
	CAST IN PLACE REINFORCED CONCRETE	977	CY	150	147
	PRECAST BEAMS	13,947	CY	500	6,973
	PRECAST BEAM SEATS	211	CY	1000	211
	TREMIE CONCRETE	168	CY	500	84
	PERMANENT CELL FILL (C0NCRETE)	7,428	CY	200	1,486
	GROUT FOR BEAMS	626	CY	1000	626
	STEEL REINFORCEMENT	2,351,969	LB	0.75	1,764
	GRAVEL FILL	36,239	CY	10	362
	METALS				
	SHEET PILING	1	JOB	SUM	6,131
	FOUNDATION PILING	1	JOB	SUM	256
	POST TENSIONING	1,634	LF	30	49
	STRUCTURAL STEEL	1	JOB	SUM	3,268
	FLOATING GUIDEWALL	1	JOB	SUM	3,750
	05.60 GUIDEWALLS SUBTOTAL				27,715
09.	**CHANNEL WORK**	1	JOB	SUM	10,300
	PROJECT SUBTOTAL				136,406
	CONTINGENCIES 25%				3,410
	PROJECT SUBTOTAL WITH CONTINGENCIES				139,816
30.	**PLANNING, ENGINEERING, AND DESIGN (10%)**				17,000
31.	**CONSTRUCTION MANAGEMENT (10%)**				17,000
	PROJECT TOTAL				$ 173,816

TOTAL BASIC LOCK COST (O4., 05., 05.60.) WITH CONTINGENCIES, PED, & CM*	**$ 174,000**

*(EXCLUDES REAL ESTATE, RELOCATION, AND CHANNEL WORK WHICH ARE MORE SITE-SPECIFIC.)

Subject	ROCK FOUNDED LOCKS: L/D 16 Location 3 Quantities for Type C Lock, Parallel Sheetpile Walls	Date June 1997
Computed by David R. Wehrley	Checked DRW	Sheet 1 of 4

Riverward Lockwall

(Including the miter gate monolith)

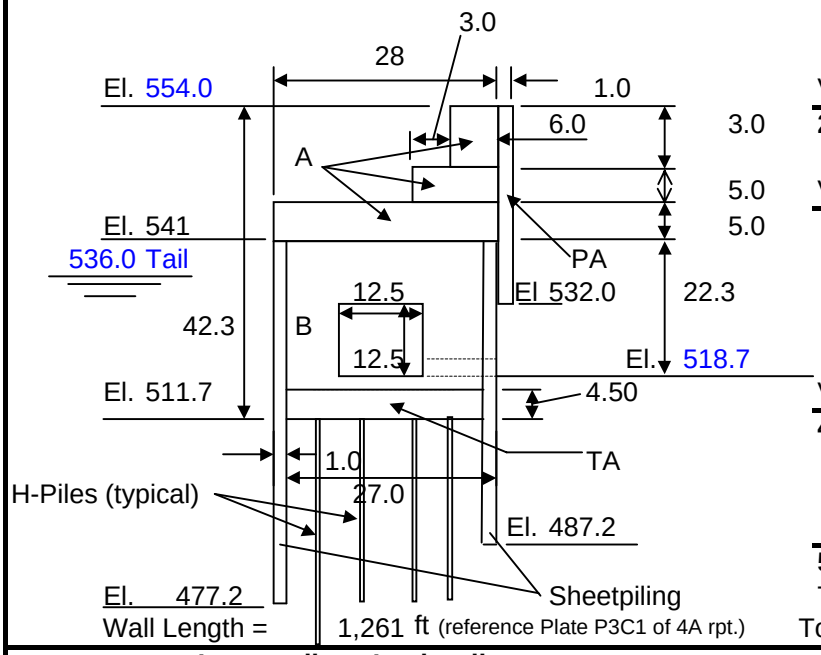

Wall Length = 1,261 ft (reference Plate P3C1 of 4A rpt.)

1. Cast in place concrete

A =	203.0	SF
B =	498.8	SF
Sum =	701.8	SF
Volume =	**32,779**	CY

2. Tremie concrete

TA =	121.5	SF
Volume =	**5,675**	CY

3. Precast concrete

PA =	22.0	SF
PB =	14.5	SF (Culvert top, not shown)
Sum =	36.5	SF
Volume =	**1,705**	CY

4. Sheetpiling

Ht. Left=	63.8	FT
Ht. Right=	53.8	FT
Area =	**148,294**	SF (both sides)

5. H-Piling = 54/45' mono x wall length

Total No.=	1,513	HP 14 X89
Total Lgth.=	**113,490**	LF HP

Intermediate Lockwall

(Including the miter gate monolith)

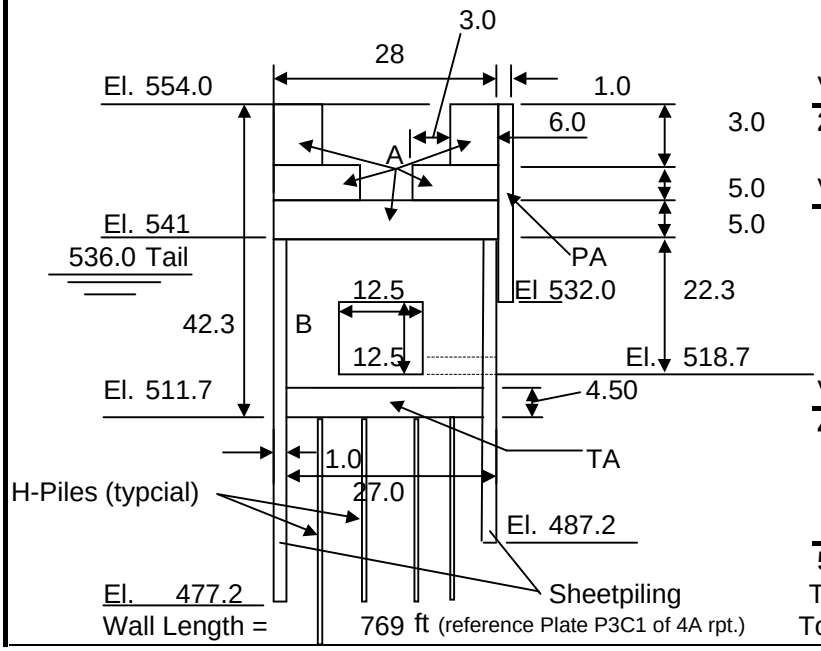

Wall Length = 769 ft (reference Plate P3C1 of 4A rpt.)

1. Cast in place concrete

A =	266.0	SF
B =	498.8	SF
Sum =	764.8	SF
Volume =	**21,784**	CY

2. Tremie concrete

TA =	121.5	SF
Volume =	**3,461**	CY

3. Precast concrete

PA =	22.0	SF
PB =	14.5	SF (Culvert top, not shown)
Sum =	36.5	SF
Volume =	**1,040**	CY

4. Sheetpiling

Ht. Left=	63.8	FT
Ht. Right=	53.8	FT
Area =	**90,434**	SF (both sides)

5. H-Piling = 54/45' mono x wall length

Total No.=	923	HP 14 X89
Total Lgth.=	**69,210**	FT HP

Subject		Date
L/D 16 Location 3 Quantities for Type C Lock, Parallel Sheetpile Walls		June 1997
Computed by	Checked	Sheet of
David R. Wehrley	DRW	2 4

COFFERDAM (ONLY SINGLE WALL COFFERDAM -- FOR LOWER MITER GATE MONOLITH):

ASSUME THE SAME AS L/D 25

Extra Sheetpiling = 2 x (29+110+29) x length
= 21,437 LF Sheetpiling

LOWER MITER GATE SILL:

Length = 120.0 ft
Width = 110.0 ft
Average Height = 6.0 ft

Volume = 2,933.3 CY (cast-in-place concrete)

H-piling for sill: Assume 5' spacing each way, 75' long
Total = (120/5 x 110/5) x 75
= 39,600 LF (HP 14X89)

SUMMARY:

CONCRETE (Cast in place)

Lockwalls = 54,563 CY
Sills = 2,933 CY

Total = 57,500 CY

PRECAST CONCRETE

Total = 2,744 CY

TREMIE CONCRETE

Total = 9,135 CY

SHEETPILING

Required quantity for walls = 238,700 SF
Required quantity for cofferdam = 21,400 SF

Total = 260,100 SF of piling

FOUNDATION PILING

Total = 222,300 LF (HP 14 X 89)

Subject		Date
L/D 16 Location 3 Quantities for Type C Lock, Guardwalls		June 1997
Computed by David R. Wehrley	Checked David R. Wehrley	Sheet of 3 4

Upstream Guardwall Cell, Small (14 total)
(Downstream Quantities the same)

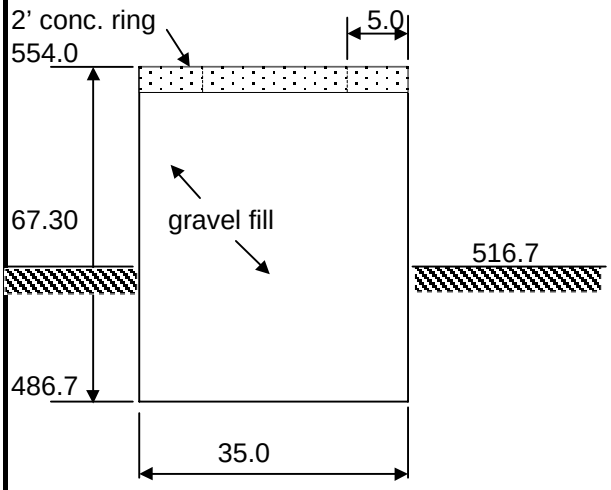

Except for those quantities computed here, all other quantities are assumed the same as for Lock 25 (the model site for pile-founded locks).

Cast-in-Place Concrete

2' conc. ring	=	34.9	CY
for 14 cells	=	489	CY
Gravel fill	=	1,294	CY
for 14 cells	=	18,119	CY
Sheet Piling	=	7,400	SF
for 14 cells	=	103,600	SF

Upstream Guardwall Cell, Large, Concrete filled (1 total)
(Downstream Quantities the same)

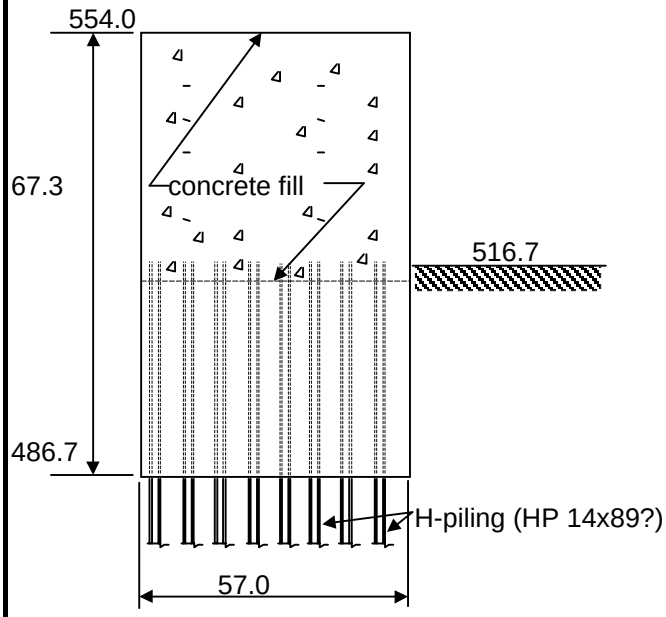

Concrete Fill for Cell
= 3,714 CY

Sheet Piling = 12,051 SF

H-piling:

No. of Piles	=	102	
Length of Piles	=	7,650	L.F.

Subject		Date
L/D 16 Location 3 Quantities for Type C Lock, Guardwalls		June 1997
Computed by David R. Wehrley	Checked David R. Wehrley	Sheet 4 of 4

LOCK GUIDEWALLS :

A. UPSTREAM GUIDEWALL

1. Concrete Rings (cast-in-place)

Volume = 489 CY

2. Concrete cell fill

Volume = 3,714 CY

3. Gravel Fill

Volume = 18,119 CY

4. Sheet Piling

Area = 115,652 SF

5. H-Piling

Length = 7,650 LF

B. DOWNSTREAM GUIDEWALL

1. Concrete Rings (cast-in-place)

Volume = 489 CY

2. Concrete cell fill

Volume = 3,714 CY

3. Gravel Fill

Volume = 18,119 CY

4. Sheet Piling

Area = 115,652 SF

5. H-Piling

Length = 7,650 LF

Guidewall Summary

Total Cast-in-Place Concrete	977	CY
Total Concrete Fill	7,428	CY
Total Gravel Fill	36,239	CY
Total Sheet Piling	231,304	SF
Total H-Piling	15,300	LF

LOCK AND DAM NO.16, LOCATION NO.4, TYPE A,
1200' LOCK ALTERNATIVE (PILE FOUNDED)

ACCOUNT CODE	ITEM	QUANTITY	UNIT	UNIT PRICE ($'s)	AMOUNT ($1,000's)
01.	**LANDS AND DAMAGES**				
	REAL ESTATE	1	JOB	SUM	212
04.	**DAMS**				
	DEMOLITION (TAINTER GATE BAY NO.1)	1	JOB	SUM	1,504
	CONCRETE (TIE-IN TO EXISTING LOCK)	362	CY	280.00	101
	MISCELLANEOUS	1	JOB	SUM	150
	REPLACEMENT TAINTER GATE	1	JOB	SUM	25,000
	04 DAMS SUBTOTAL				26,755
05.	**LOCKS**				
	SITEWORK				
	MOBILIZATION	1	JOB	SUM	10,650
	DEMOLITION	1	JOB	SUM	1,910
	EXCAVATION	48,960	CY	6.25	306
	FOUNDATION FILL AT SCOUR HOLE	8,426	CY	18.75	158
	LOCK WALL FILL AND COFFERDAM FILL	314,100	CY	10.00	3,141
	CAPSTONE	52,660	TN	25.00	1,317
	RIPRAP	33,380	TN	20.00	668
	LEVELING STONE IN LOCK FLOOR	4,580	TN	15.00	69
	GRAVEL FILTER IN LOCK FLOOR	16,606	TN	15.00	249
	GEOTEXTILE	13,740	SY	6.00	82
	FOUNDATION/LOCK DEWATERING	1	JOB	SUM	3,000
	MARINE FACILITIES, TEMP. MOORING STR.	1	JOB	SUM	3,900
	CONCRETE				
	STRUCTURAL GROUTING	450	CY	200	90
	CAST IN PLACE REINFORCED CONCRETE	101,600	CY	217	22,047
	CAST IN PLACE CONNECTIONS	964	CY	725	699
	PRECAST CONCRETE	0	CY	400	0
	TREMIE CONCRETE, BASE .	12,736	CY	165	2,101
	PRECAST FLOOR PAVERS AND STRUTS	15,450	CY	286	4,419
	SET PRECAST FLOOR BEAMS	31	EA	16000	496
	SET FLOOR PANELS	62	EA	10000	620
	STEEL REINFORCEMENT	6,096,000	LB	0.75	4,572
	METALS				
	SHEET PILING	612,300	SF	35.80	21,920
	SHEET PILE BRACING	1	JOB	SUM	350
	FOUNDATION PILING AND TESTING	209,190	LF	39.75	8,315
	STRUCTURAL STEEL (GATES, VALVES, ETC.)	1	JOB	SUM	11,613
	STRUCT. STEEL (MISCELLANEOUS - LADDERS, ETC.)	1	JOB	SUM	3,040
	ELECTRICAL				
	ELECTRICAL SYSTEM		JOB	SUM	4,700
	INSTRUMENTATION	1	JOB	SUM	1,250
	MECHANICAL				
	GATE AND VALVE OPERATING MACHINERY	1	JOB	SUM	2,750
	MECHANICAL SYSTEMS	1	JOB	SUM	3,200
	MISCELLANEOUS	1	JOB	SUM	1,950
	05 LOCKS SUBTOTAL				119,582

LOCK AND DAM NO.16, LOCATION NO.4, TYPE A,
1200' LOCK ALTERNATIVE (PILE FOUNDED)

05.60.	**GUIDEWALLS**				
	SITEWORK				
	EXCAVATION	118,490	CY	4.5	533
	BACKFILL	73,640	CY	10	736
	SCOUR PROTECTION	46,350	TON	15	695
	CONCRETE				
	42" DIAMETER PILES	6,360	LF	400	2,544
	CAST IN PLACE REINFORCED CONCRETE	5,874	CY	150	881
	PRECAST BEAMS	17,325	CY	500	8,663
	PRECAST BEAM SEATS	262	CY	1000	262
	TREMIE CONCRETE	1,709	CY	500	855
	PERMANENT CELL FILL (C0NCRETE)	5,394	CY	200	1,079
	GROUT FOR BEAMS	778	CY	1000	778
	STEEL REINFORCEMENT	2,921,700	LB	0.75	2,191
	GRAVEL FILL	18,728	CY	10	187
	METALS				
	SHEET PILING	100,006	SF	25.00	2,500
	FOUNDATION PILING	1	JOB	SUM	318
	POST TENSIONING	2,030	LF	30	61
	STRUCTURAL STEEL	1	JOB	SUM	4,060
	05.60 GUIDEWALLS SUBTOTAL				26,343
09.	**CHANNEL WORK**	1	JOB	SUM	10,683
	PROJECT SUBTOTAL				183,576
	CONTINGENCIES 25%				45,894
	PROJECT SUBTOTAL WITH CONTINGENCIES				229,470
30.	**PLANNING, ENGINEERING, AND DESIGN (10%)**				23,000
31.	**CONSTRUCTION MANAGEMENT (10%)**				23,000
	PROJECT TOTAL				$ 275,000

LOCK AND DAM NO.16, LOCATION 4, TYPE A
1200'LOCK ALTERNATIVE (PILE FOUNDED)

Subject	PILE FOUNDED LOCKS: L/D 16 Location 4 Quantities for Type A Lock, Crane-In Construction	Date Sep 96
Computed by Michael Cummings	Checked	Sheet 1 of 6

Gate Monolith

Note: For quantities change the RED values in the cells of the dimensioned cross section shown.

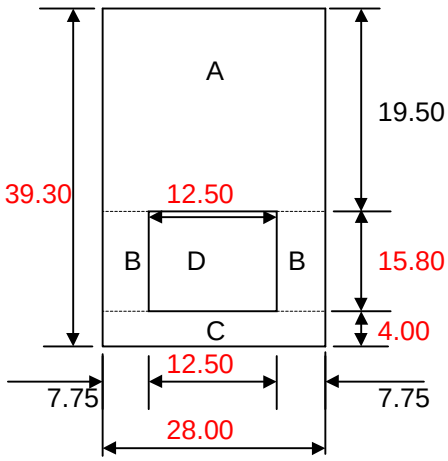

Cast in place concrete

A_g =	546.0	ft^2	
B_g =	244.9	ft^2	
C_g =	112.0	ft^2	
D_g =	197.5	ft^2	CULVERT
Total =	902.9	ft^2	

Tremie concrete (below "C")

132.0 ft^2

hght chk = 39.30 left
hght chk = 39.30 right

US lngth = 265.0 ft DS lngth = 240.0 ft

Lock Wall
typical

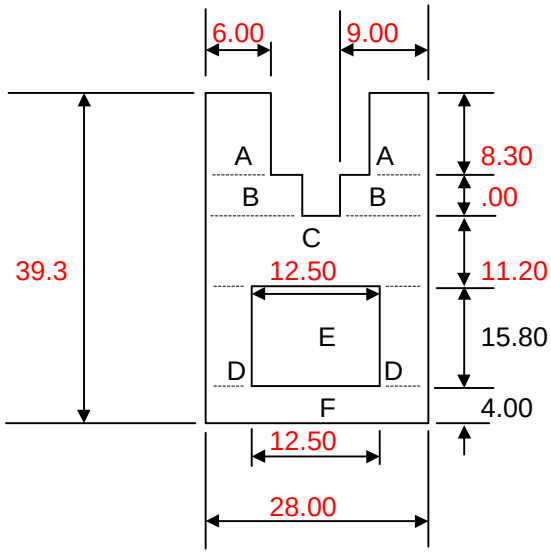

Cast in place concrete

A_w =	99.60	ft^2	
B_w =	.00	ft^2	
C_w =	313.60	ft^2	
D_w =	244.90	ft^2	
E_w =	197.50	ft^2	CULVERT
F_w =	112.00	ft^2	
Total =	770.10	ft^2	

Tremie concrete (below "F")

132.0 ft^2

hght chk = 39.30 left
hght chk = 39.30 right

RS Wall = 1,050.0 ft LS Wall = 1,050.0 ft

LOCK AND DAM NO.16, LOCATION 4, TYPE A
1200'LOCK ALTERNATIVE (PILE FOUNDED)

Subject		Date
L/D 16 Location 4 Quantities for Type A Lock, Crane-In Construction		Sep 96
Computed by Michael Cummings	Checked	Sheet 2 of 6

Typical cell for cofferdam

Area = 1,736.0 ft^2

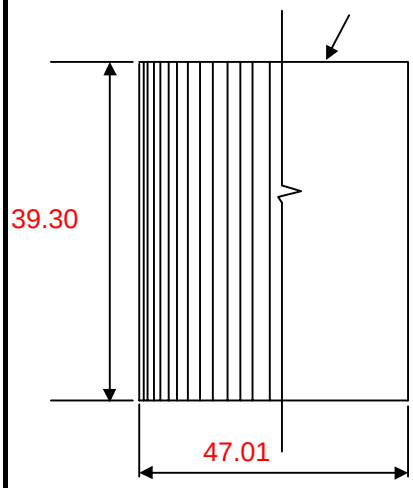

Pile type: PS31
Choose PSA23, PS27.5, or PS31

Area between cells:

Area =	773.0	ft^2
Distance =	15.28	ft
Length =	1.64	ft
Number in cell =	90	piles
No. in space =	20	piles
US Length =	2,650.0	ft
DS Length =	2,650.0	ft

LOCK CHAMBER WALLS:

A. WALL MONOLITHS

1. River side walls

(a) Cast in place concrete

Volume = 29,948.3 CY

(b) Precast concrete

Volume = .0 CY

1. Land side walls

(a) Cast in place concrete

Volume = 29,948.3 CY

(b) Precast concrete

Volume = .0 CY

B. GATE MONOLITHS

1. Upstream cast in place concrete

Volume = 17,723.6 CY

2. Upstream precast concrete

Volume = .0 CY

1. Downstream cast in place concrete

Volume = 16,051.6 CY

2. Downstream precast concrete

Volume = .0 CY

LOCK AND DAM NO.16, LOCATION 4, TYPE A
1200'LOCK ALTERNATIVE (PILE FOUNDED)

Subject		Date
L/D 16 Location 4 Quantities for Type A Lock, Crane-In Construcion		Sep 96
Computed by Michael Cummings	Checked	Sheet 3 of 6

COFFERDAMS:

1. Cofferdam #1, Upstream

Number = 43.0 cells

Total = 9,460.0 piles

2. Cofferdam #2, Upstream

Number = 43.0 cells

Total = 314,071.0 CY fill volume

SILLS:

Length = 120.0 ft
Width = 111.0 ft
Height = 8.0 ft

Volume = 7,893.3 CY

SUMMARY:

CONCRETE (Cast in place)

A.	Lockwalls =	59,896.7	CY
B.	Gate monoliths =	33,775.1	CY
C.	Sills =	7,893.3	CY
D.	Tremie =	12,735.6	CY
	Total =	101,600.0	CY

PRECAST CONCRETE

A.	Lockwalls =	.0	CY
B.	Gate monoliths =	.0	CY
	Total =	.0	CY

SHEETPILES

A.	Required number for cofferdams =	9,460.0	piles
B.	Required number for walls =	0	piles
	Total =	9,500.0	piles
	Total =	612,300.0	SF of piling

FILL

A.	Required fill for cofferdams =	314,071.0	CY
	Total =	314,100.0	CY

LOCK AND DAM NO.16, LOCATION 4, TYPE A
1200'LOCK ALTERNATIVE (PILE FOUNDED)

Subject		Date
L/D 16 Location 4 Quantities for Type B Lock, Crane-In Construcion		Sep 96
Computed by Michael Cummings	Checked	Sheet 4 of 6

Upstream Guidewall Cell, Small

(typical)

Area = 700.0 SF

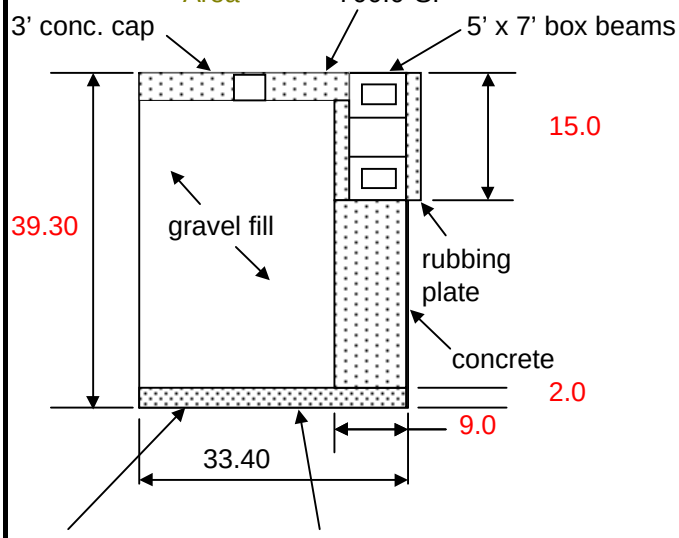

Area = 876.0 SF

Note: For quantities change the RED values in the cells of the dimensioned cross section shown.

Cast-in-Place Concrete

3' conc. cap	=	77	CY
concrete	=	183	CY
Total	=	260	CY
for 7 cells	=	1,818	CY
Tremie concrete	=	65	CY
for 7 cells	=	455	CY
Precast Concrete			
5'x7' beam	=	889	CY
rubbing pl.	=	500	CY
Total	=	1,389	CY
Gravel fill	=	892	CY
for 7 cells	=	6,243	CY
Sheet Piling	=	4,124	SF
for 7 cells	=	28,866	SF

Upstream Guidewall Cell, Large

(typical)

Area = 2,124.0 SF

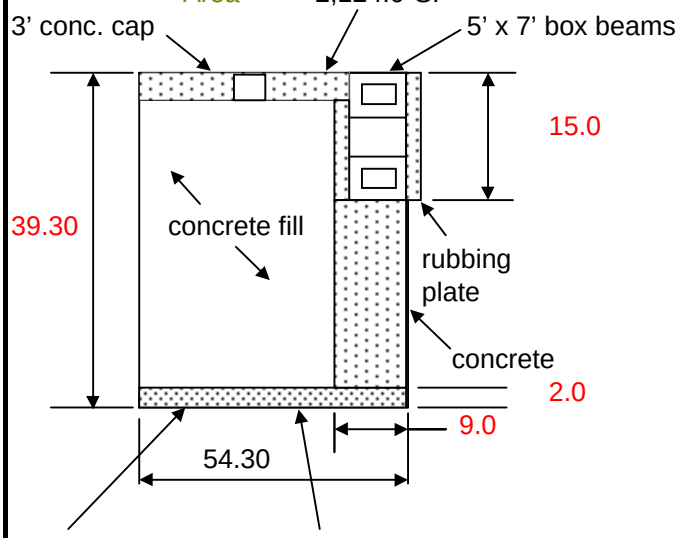

Area = 2,316.0 SF

Note: For quantities change the RED values in the cells of the dimensioned cross section shown.

Cast-in-Place Concrete

3' conc. cap	=	235	CY
concrete	=	233	CY
Total	=	468	CY
Tremie concrete	=	172	CY
Permanent Cell Fill		2,697	CY
Sheet Piling	=	6,704	SF

LOCK AND DAM NO.16, LOCATION 4, TYPE A
1200'LOCK ALTERNATIVE (PILE FOUNDED)

Subject		Date
L/D 16 Location 4 Quantities for Type B Lock, Crane-In Construcion		Sep 96
Computed by Michael Cummings	Checked	Sheet 5 of 6

Downstream Guidewall Cell, Small

(typical)

Area = 700.0 SF

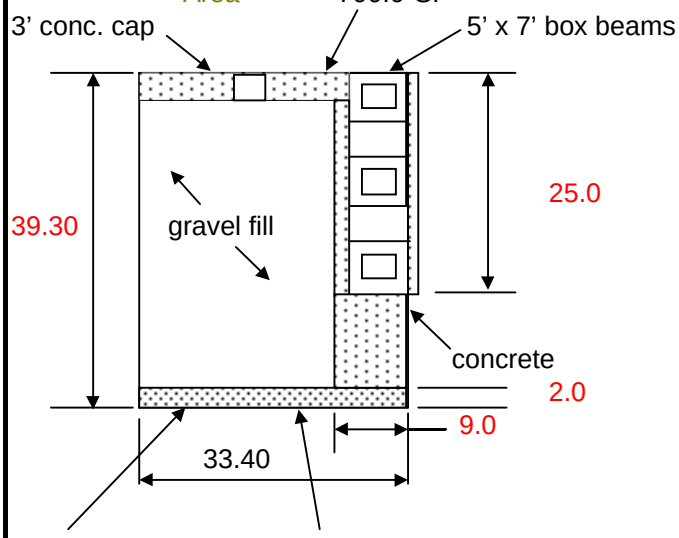

Area = 876.0 SF

Note: For quantities change the RED values in the cells of the dimensioned cross section shown.

Cast-in-Place Concrete			
3' conc. cap	=	77	CY
concrete	=	135	CY
Total	=	211	CY
for 14 cells	=	2,959	CY
Tremie concrete	=	65	CY
for 14 cells	=	910	CY
Precast Concrete			
5'x7' beam	=	2,667	CY
rubbing pl.	=	1,667	CY
Total	=	4,333	CY
Gravel fill	=	892	CY
for 14 cells	=	12,485	CY
Sheet Piling	=	4,124	SF
for 14 cells	=	57,732	SF

Downstream Guidewall Cell, Large

(typical)

Area = 2,124.0 SF

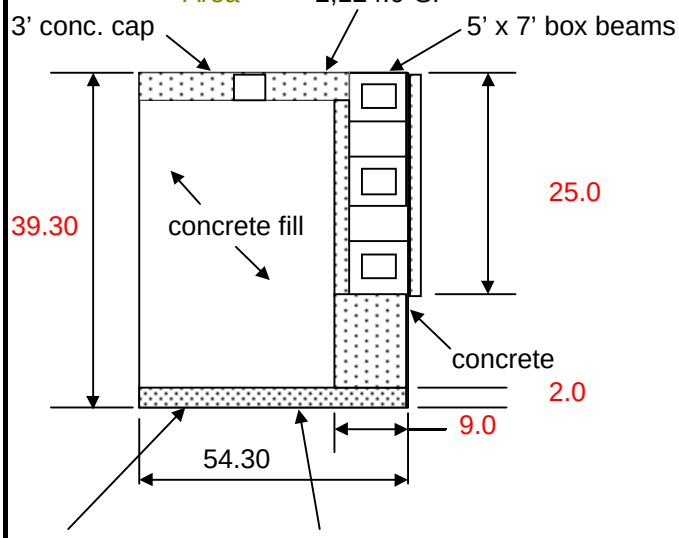

Area = 2,316.0 SF

Note: For quantities change the RED values in the cells of the dimensioned cross section shown.

Cast-in-Place Concrete			
3' conc. cap	=	235	CY
concrete	=	394	CY
Total	=	629	CY
Tremie concrete	=	172	CY
Permanent Cell Fill		2,697	CY
Sheet Piling	=	6,704	SF

LOCK AND DAM NO.16, LOCATION 4, TYPE A
1200'LOCK ALTERNATIVE (PILE FOUNDED)

Subject		Date
L/D 16 Location 4 Quantities for Type B Lock, Crane-In Construcion		Sep 96
Computed by Michael Cummings	Checked	Sheet 6 of 6

LOCK GUIDEWALLS :

A. UPSTREAM GUIDEWALL

1. Cast-in-place concrete

Volume = 2,286 CY

2. Precast concrete

Volume = 1,389 CY

3. Gravel Fill

Volume = 6,243 CY

4. Sheet Piling

Area = 35,570 SF

5. Permanent Cell Fill

Volume = 2,697 CY

6. Tremie Concrete

Volume = 627 CY

B. DOWNSTREAM GUIDEWALL

1. Cast-in-place concrete

Volume = 3,588 CY

2. Precast concrete

Volume = 4,333 CY

3. Gravel Fill

Volume = 12,485 CY

4. Sheet Piling

Area = 64,436 SF

5. Permanent Cell Fill

Volume = 2,697 CY

6. Tremie Concrete

Volume = 1,082 CY

Guidewall Summary

Total Cast-in-Place Concrete	5,874	CY
Total Precast Concrete	5,722	CY
Total Gravel Fill	18,728	CY
Total Sheet Piling	100,006	SF
Total Permanent Cell Fill	5,394	CY
Total Tremie Concrete	1,709	CY

LOCK AND DAM NO.16, LOCATION 4, TYPE B,
1200' LOCK ALTERNATIVE (PILE FOUNDED)

ACCOUNT CODE	ITEM	QUANTITY	UNIT	UNIT PRICE ($'s)	AMOUNT ($1,000's)
01.	**LANDS AND DAMAGES**				
	REAL ESTATE	1	JOB	SUM	200
04.	**DAMS**				
	DEMOLITION (TAINTER GATE BAY NO.1)	1	JOB	SUM	1,504
	REPLACEMENT TAINTER GATE	1	JOB	SUM	25,000
	04 DAMS SUBTOTAL				26,504
05.	**LOCKS**				
	SITEWORK				
	MOBILIZATION	1	JOB	SUM	8,000
	DEMOLITION	1	JOB	SUM	1,910
	EXCAVATION	117,700	CY	4.50	530
	BACKFILL	160,000	CY	6.25	1,000
	CAPSTONE	52,660	TN	25.00	1,317
	SCOUR PROTECTION	1	JOB	SUM	2,300
	RIPRAP	143,700	TN	20.00	2,874
	STONE FILL	16,606	TN	15.00	249
	GEOTEXTILE	13,740	SY	6.00	82
	FOUNDATION/LOCK DEWATERING	1	JOB	SUM	3,000
	COFFERDAM REMOVAL	1	JOB	SUM	81
	MARINE FACILITIES, TEMP. MOORING STR.	1	JOB	SUM	3,900
	CONCRETE				
	STRUCTURAL GROUTING	1	JOB	SUM	5,400
	CAST IN PLACE REINFORCED CONCRETE	41,900	CY	217	9,092
	CAST IN PLACE CONNECTIONS	964	CY	725	699
	PRECAST CONCRETE LOCK FLOOR	8,600	CY	400	3,440
	PRECAST CONCRETE CHAMBER AND APPROACH WALL	7,100	CY	400	2,840
	TREMIE CONCRETE, BASE	20,300	CY	165	3,350
	TREMIE CONCRETE, WALLS	45,400	CY	165	7,491
	FURNISH AND SET LANDING PADS	24	EA	19000	456
	SET PRECAST WALL UNITS	88	EA	16000	1,408
	FLOAT IN AND SET FLOOR UNITS	11	EA	40000	440
	STEEL REINFORCEMENT	5,237,500	LB	0.75	3,928
	STEEL CULVERT PIPE	5,278,500	LB	0.65	3,431
	METALS				
	SHEET PILING	1	JOB	SUM	6,400
	SHEET PILE BRACING	1	JOB	SUM	600
	FOUNDATION PILING AND TESTING	1	JOB	SUM	15,000
	STRUCTURAL STEEL (GATES, VALVES, ETC.)	1	JOB	SUM	11,600
	STRUCT. STEEL (MISCELLANEOUS - LADDERS, ETC.)	1	JOB	SUM	3,000
	ELECTRICAL				
	ELECTRICAL SYSTEM		JOB	SUM	4,700
	INSTRUMENTATION	1	JOB	SUM	1,250
	MECHANICAL				
	GATE AND VALVE OPERATING MACHINERY	1	JOB	SUM	2,750
	MECHANICAL SYSTEMS	1	JOB	SUM	3,200
	MISCELLANEOUS	1	JOB	SUM	1,950
	05 LOCKS SUBTOTAL				117,668

LOCK AND DAM NO.16, LOCATION 4, TYPE B,
1200' LOCK ALTERNATIVE (PILE FOUNDED)

05.60.	**GUIDEWALLS**				
	SITEWORK				
	EXCAVATION	118,490	CY	4.5	533
	BACKFILL	73,640	CY	10	736
	SCOUR PROTECTION	211,130	TON	15	3,167
	CONCRETE				
	42" DIAMETER PILES	6,360	LF	400	2,544
	CAST IN PLACE REINFORCED CONCRETE	9,329	CY	150	1,399
	PRECAST BEAMS	17,325	CY	500	8,663
	PRECAST BEAM SEATS	262	CY	1000	262
	TREMIE CONCRETE	1,709	CY	500	855
	PERMANENT CELL FILL (C0NCRETE)	8,665	CY	200	1,733
	GROUT FOR BEAMS	778	CY	1000	778
	STEEL REINFORCEMENT	2,921,700	LB	0.75	2,191
	GRAVEL FILL	30,085	CY	10	301
	METALS				
	SHEET PILING	152,936	SF	25.00	3,823
	FOUNDATION PILING	1	JOB	SUM	318
	POST TENSIONING	2,030	LF	30	61
	STRUCTURAL STEEL	1	JOB	SUM	4,060
	05.60 GUIDEWALLS SUBTOTAL				31,424
09.	**CHANNEL WORK**	1	JOB	SUM	2,974
	PROJECT SUBTOTAL				178,770
	CONTINGENCIES 25%				44,693
	PROJECT SUBTOTAL WITH CONTINGENCIES				223,463
30.	**PLANNING, ENGINEERING, AND DESIGN (10%)**				22,000
31.	**CONSTRUCTION MANAGEMENT (10%)**				22,000
	PROJECT TOTAL				$ 267,000

LOCK AND DAM NO.16, LOCATION 4, TYPE B,
1200' LOCK ALTERNATIVE (PILE FOUNDED)

Subject	PILE FOUNDED LOCKS: 1200 ft lock L/D 16 Location 4 Quantities for Type B Lock	Date OCT 1996
Computed by Michael Cummings	Checked	Sheet 1 of 7

Gate Monolith
(typical)

Note: For quantities change the RED values in the cells of the dimensioned cross section shown.

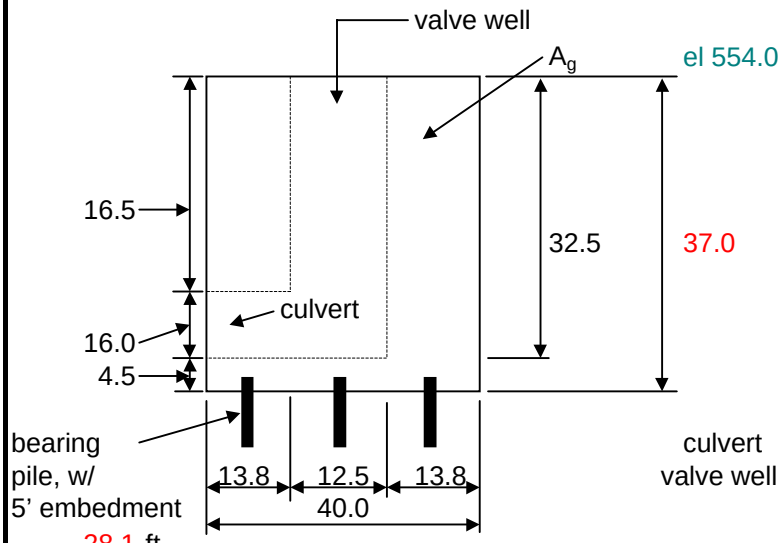

Cast in place concrete

A_g =	14,546.7	CY	U.S.
A_g =	17,561.5	CY	D.S.
Total =	32,108.1	CY	

The culverts are subtracted gross volume

	width	length	heighth	
culvert =	12.5	16.0	50.0	CF
valve well =	12.5	16.0	13.8	CF

US gates length = 137.0 ft DS gates length = 164.5 ft

hght chk =	37.00	left
hght chk =	37.00	right

Lock Wall
(typical)

Note: For quantities change the RED values in the cells of the dimensioned cross section

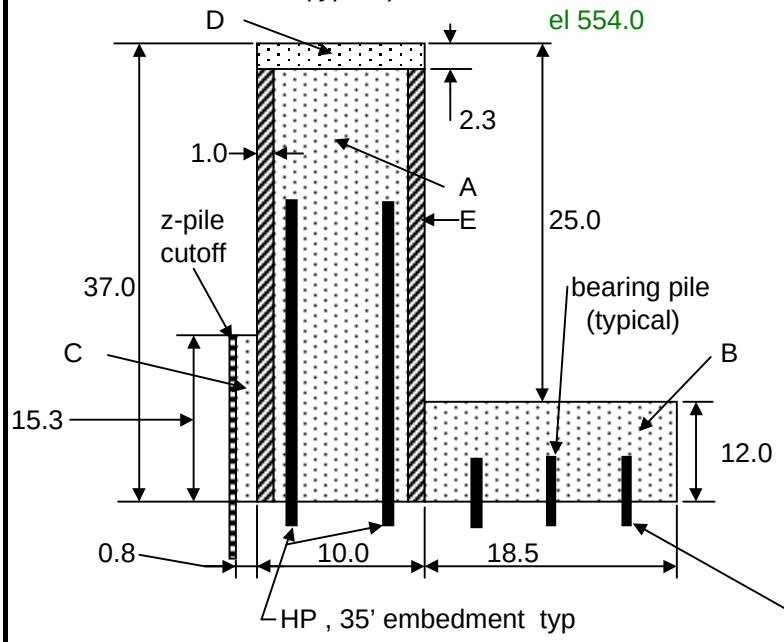

Tremie concrete / CIP

A =	277.6	SF
B =	222.0	SF
C =	11.5	SF

Cast in place

D =	23.0	SF

Pre-cast

E =	69.4	SF
Total =		SF

HP reinforcing ratio =	0.960	HP/ft
Total HP walls =	2,088.0	ea
Total bearing pile =	13,050.0	ea

assume 3' spacing

58.1 ft total length 28.1 ft

RS Wall = 1,087.5 ft LS Wall = 1,087.5 ft

hght chk =	37.00	left
hght chk =	37.00	right

L164bp

LOCK AND DAM NO.16, LOCATION 4, TYPE B,
1200' LOCK ALTERNATIVE (PILE FOUNDED)

Subject	PILE FOUNDED LOCKS: 1200 ft lock L/D 16 Location 4 Quantities for Type B Lock	Date OCT 1996
Computed by Michael Cummings	Checked	Sheet 2 of 7

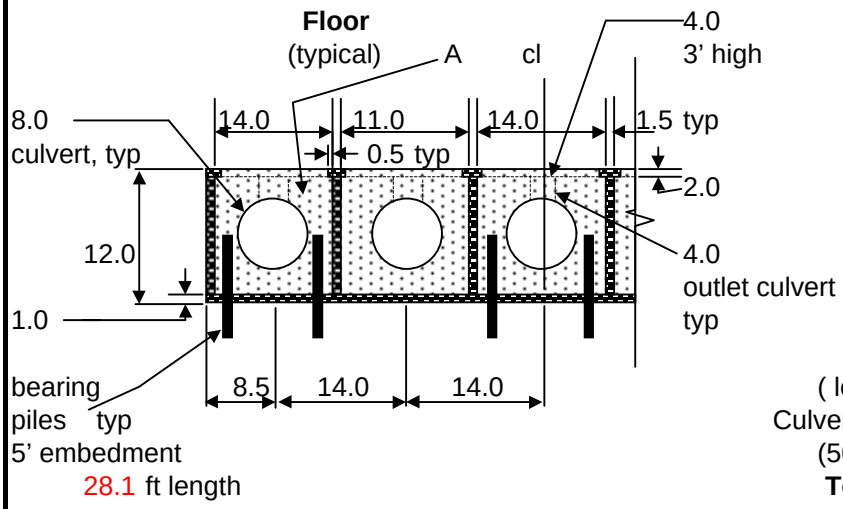

Tremie concrete
A = 442.7 SF
Pre-cast
B = 182.0 SF

Total = 624.7 SF

Piles: 6 rows = 7,620.0 piles
(length not determined)
Culvert fill/empty area = 11.31 CF/ft
(50 ft section from plate P4B2)
Total tremie conc = 20,290.0 CY

Total pre-cast = 8,560.7 CY

Length of floor = 1,270.0 ft width of floor = 73.0 ft

Impact cell
typical
Area = 2,827.0 ft^2

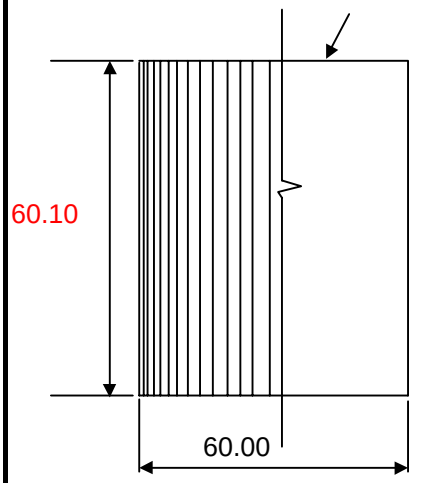

Note: For quantities change the RED values in the cells of the dimensioned cross section shown.

Pile type: PS31
Choose PSA23, PS27.5, or PS31

Area between cells:
Area = 1,127.0 SF

Length = 1.641 ft
Number in cell = 115 piles

US number = 1.0 cells and spaces between cells
DS number = 1.0 cells and spaces between cells

US Wall = 994.0 ft DS Wall = 1,016.0 ft

LOCK AND DAM NO.16, LOCATION 4, TYPE B,
1200' LOCK ALTERNATIVE (PILE FOUNDED)

Subject	PILE FOUNDED LOCKS: 1200 ft lock L/D 16 Location 4 Quantities for Type B Lock	Date OCT 1996
Computed by Michael Cummings	Checked	Sheet 3 of 7

cofferdam cell
typical
Area = 1,963.0 ft^2

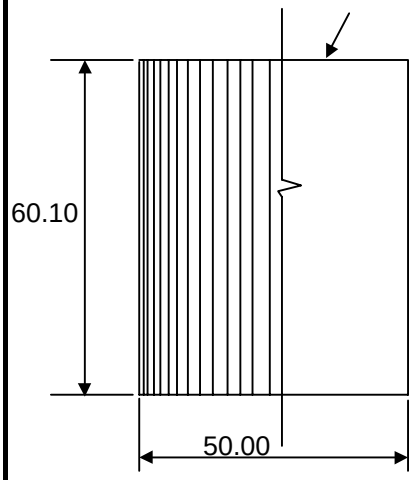

Note: For quantities change the RED values in the cells of the dimensioned cross section shown.

Pile type: PS31
Choose PSA23, PS27.5, or PS31

Area between cells:

Area =	855.0	SF
Distance =	15.91	ft
Length =	1.641	ft
Number in cell =	96	piles
No. in space =	21	piles

UPSTREAM

North or South length:	264.0	.4	modular numbers
East or West length:	330.0	.5	to aid in value search

DOWNSTREAM

North or South length:	264.0	.4	modular numbers
East or West length:	330.0	.5	to aid in value search

US	Total number of cells:	9.0	DS	Total number of cells:	9.0
US	Total number of cells:	11.0	DS	Total number of cells:	11.0

LOCK CHAMBER WALLS:

A. WALL MONOLITHS

1. River side walls
(a) Cast in place concrete
Volume = 926.4 CY
(b) Tremie concrete
Volume = 20,585.0 CY
(c) Pre-cast concrete
Volume = 3,033.7 CY
(d) Pre-cast concrete (approach wall)
Volume = 716.9 CY
(e) Tremie concrete (approach wall)
Volume = 2,817.5 CY

1. Land side walls
(a) Cast in place concrete
Volume = 926.4 CY
(b) Tremie concrete
Volume = 20,585.0 CY
(c) Pre-cast concrete
Volume = 3,033.7 CY
(d) Pre-cast concrete (approach wall)
Volume = 362.7 CY
(e) Tremie concrete (approach wall)
Volume = 1,425.2 CY

B. GATE MONOLITHS

1. Upstream cast in place concrete
Volume = 14,546.7 CY
Piles = 1700 LF

1. Downstream cast in place concrete
Volume = 17,561.5 CY
Piles = 2000 LF

IMPACT CELLS

Total = 230.0 piles
Total = 13,823.0 SF of piling

Total = 12,585.0 CY fill volume

LOCK AND DAM NO.16, LOCATION 4, TYPE B,
1200' LOCK ALTERNATIVE (PILE FOUNDED)

Subject	PILE FOUNDED LOCKS: 1200 ft lock L/D 16 Location 4 Quantities for Type B Lock	Date OCT 1996
Computed by Michael Cummings	Checked	Sheet 4 of 7

SILLS:

Length = 120.0 ft **Volume =** 7,893.0 CY of CIP concrete
111.0 ft
8.0 ft

COFFERDAM CELLS:

Upstream riverside
Total = 2,340.0 piles
Total = 230,780.0 SF of piling

Downstream riverside
Total = 2,340.0 piles
Total = 230,780.0 SF of piling

SUMMARY:

Lockwalls:

CONCRETE (Precast)
A. Lockwalls = 6,067.4 CY
B. Approach walls = 1,079.6 CY **Total =** 7,100.0 CY

CONCRETE (CIP, Cast in place)
A. Lockwalls = 1,852.8 CY
B. Gate mono's = 32,108.1 CY
C. Sills = 7,893.0 CY **Total =** 41,900.0 CY

CONCRETE (Tremie)
A. Lockwalls = 41,169.9
B. Approach walls = 4,242.7 **Total =** 45,400.0 CY

HP PILING **Total =** 60,700.0 LF

BEARING PILES:
Total = 64,900.0 LF

Lock Floor:

CONCRETE:
A. Tremie concrete = 20,300.0 CY
B. Precast = 8,600.0 CY

BEARING PILES:
Total = 71,400.0 LF

Impact cells:

A. SHEETPILES
1. Required number for impact cells = 230.0 piles
Total = 300.0 piles **Total =** 29,600.0 SF of piling

2. Required number for seepage cutoff
Total = .0 SF

B. FILL
1. Required fill for cofferdams = #REF! CY
Total = #REF! CY includes losses from compaction, etc

Cofferdam sheet piling

A. SHEETPILE, up and down stream
Total = 4,700.0 piles **Total =** 461,600.0 SF

LOCK AND DAM NO.16, LOCATION 4, TYPE B,
1200' LOCK ALTERNATIVE (PILE FOUNDED)

Subject	PILE FOUNDED LOCKS: L/D 16 Location 4 Quantities for Type B Lock	Date OCT 1996
Computed by Michael Cummings	Checked	Sheet 5 of 7

Upstream Guidewall Cell, Small

(typical)

Area = 700.0 SF

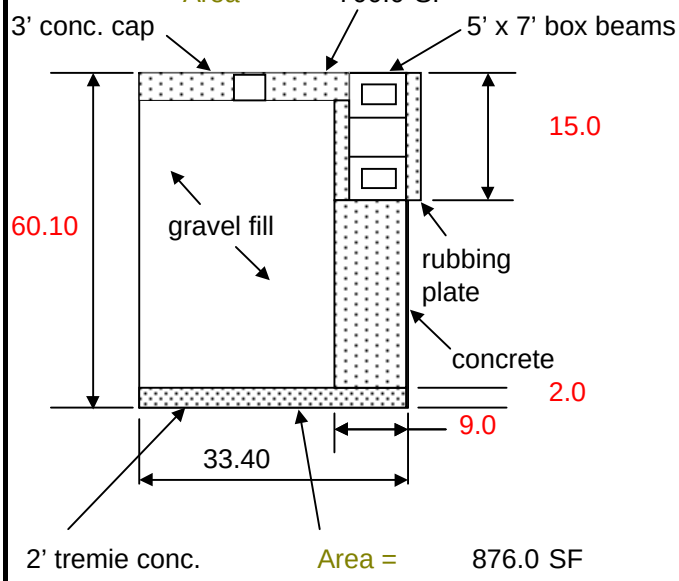

Area = 876.0 SF

Note: For quantities change the RED values in the cells of the dimensioned cross section shown.

Cast-in-Place Concrete			
3' conc. cap	=	77	CY
concrete	=	329	CY
Total	=	406	CY
for 7 cells	=	2,841	CY
Tremie concrete	=	65	CY
for 7 cells	=	455	CY
Precast Concrete			
5'x7' beam	=	889	CY
rubbing pl.	=	500	CY
Total	=	1,389	CY
Gravel fill	=	1,433	CY
for 7 cells	=	10,028	CY
Sheet Piling	=	6,306	SF
for 7 cells	=	44,144	SF

Upstream Guidewall Cell, Large

(typical)

Area = 2,124.0 SF

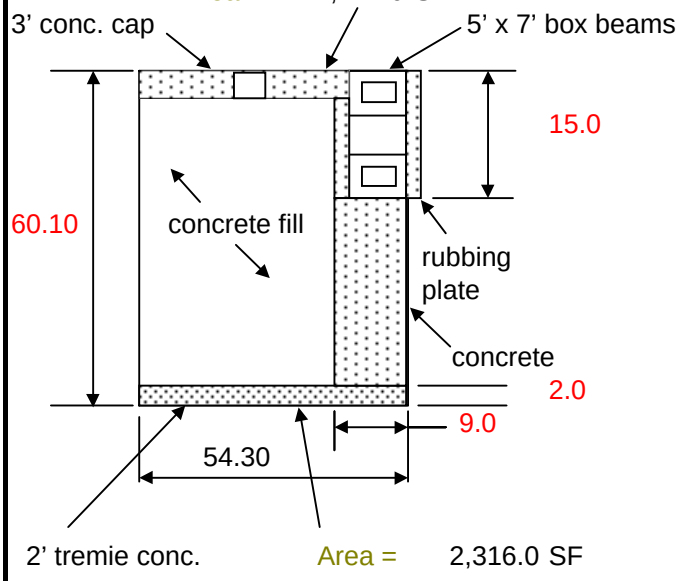

Area = 2,316.0 SF

Note: For quantities change the RED values in the cells of the dimensioned cross section shown.

Cast-in-Place Concrete			
3' conc. cap	=	235	CY
concrete	=	426	CY
Total	=	661	CY
Tremie concrete	=	172	CY
Permanent Cell Fill		4,332	CY
Sheet Piling	=	10,252	SF

L164bp

LOCK AND DAM NO.16, LOCATION 4, TYPE B,
1200' LOCK ALTERNATIVE (PILE FOUNDED)

Subject	PILE FOUNDED LOCKS: L/D 16 Location 4 Quantities for Type B Lock	Date OCT 1996
Computed by Michael Cummings	Checked	Sheet 6 of 7

Downstream Guidewall Cell, Small

(typical)

Area = 700.0 SF

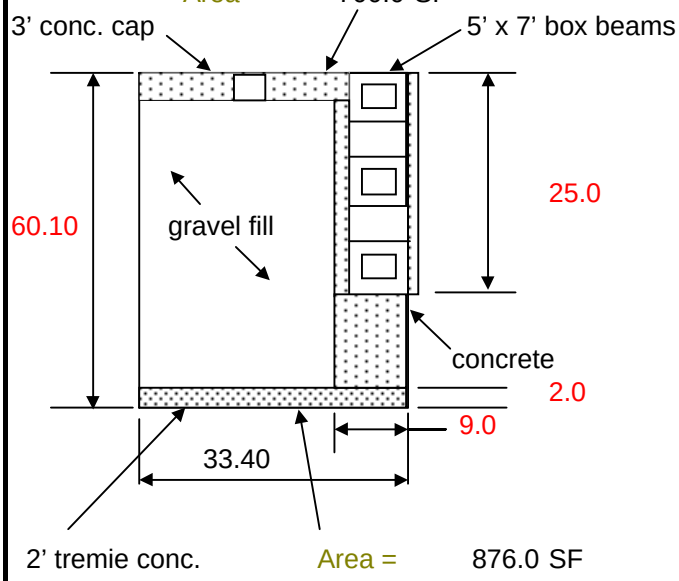

Area = 876.0 SF

Note: For quantities change the RED values in the cells of the dimensioned cross section shown.

Cast-in-Place Concrete			
3' conc. cap	=	77	CY
concrete	=	281	CY
Total	=	358	CY
for 14 cells	=	5,005	CY
Tremie concrete	=	65	CY
for 14 cells	=	910	CY
Precast Concrete			
5'x7' beam	=	2,667	CY
rubbing pl.	=	1,667	CY
Total	=	4,333	CY
Gravel fill	=	1,433	CY
for 14 cells	=	20,056	CY
Sheet Piling	=	6,306	SF
for 14 cells	=	88,287	SF

Downstream Guidewall Cell, Large

(typical)

Area = 2,124.0 SF

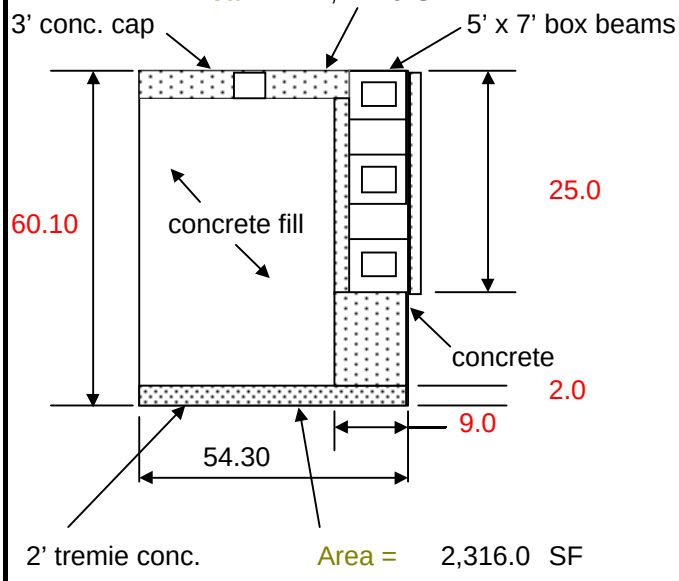

Area = 2,316.0 SF

Note: For quantities change the RED values in the cells of the dimensioned cross section shown.

Cast-in-Place Concrete			
3' conc. cap	=	235	CY
concrete	=	587	CY
Total	=	822	CY
Tremie concrete	=	172	CY
Permanent Cell Fill		4,332	CY
Sheet Piling	=	10,252	SF

LOCK AND DAM NO.16, LOCATION 4, TYPE B,
1200' LOCK ALTERNATIVE (PILE FOUNDED)

Subject	PILE FOUNDED LOCKS: L/D 16 Location 4 Quantities for Type B Lock	Date OCT 1996
Computed by Michael Cummings	Checked	Sheet 7 of 7

LOCK GUIDEWALLS :

A. UPSTREAM GUIDEWALL

1. Cast-in-place concrete

Volume = 3,502 CY

2. Precast concrete

Volume = 1,389 CY

3. Gravel Fill

Volume = 10,028 CY

4. Sheet Piling

Area = 54,396 SF

5. Permanent Cell Fill

Volume = 4,332 CY

6. Tremie Concrete

Volume = 627 CY

B. DOWNSTREAM GUIDEWALL

1. Cast-in-place concrete

Volume = 5,827 CY

2. Precast concrete

Volume = 4,333 CY

3. Gravel Fill

Volume = 20,056 CY

4. Sheet Piling

Area = 98,540 SF

5. Permanent Cell Fill

Volume = 4,332 CY

6. Tremie Concrete

Volume = 1,082 CY

Guidewall Summary

Total Cast-in-Place Concrete	9,329	CY
Total Precast Concrete	5,722	CY
Total Gravel Fill	30,085	CY
Total Sheet Piling	152,936	SF
Total Permanent Cell Fill	8,665	CY
Total Tremie Concrete	1,709	CY

LOCK AND DAM NO.16, LOCATION 4, TYPE C,
1200' LOCK ALTERNATIVE (PILE FOUNDED)

ACCOUNT CODE	ITEM	QUANTITY	UNIT	UNIT PRICE ($'s)	AMOUNT ($1,000's)
01.	**LANDS AND DAMAGES**				
	REAL ESTATE	1	JOB	SUM	212
04.	**DAMS**				
	DEMOLITION (TAINTER GATE BAY NO.1)	1	JOB	SUM	1,504
	REPLACEMENT TAINTER GATE	1	JOB	SUM	25,000
	04 DAMS SUBTOTAL				26,504
05.	**LOCKS**				
	SITEWORK				
	MOBILIZATION	1	JOB	SUM	8,000
	DEMOLITION	1	JOB	SUM	1,910
	EXCAVATION	117,700	CY	4.50	530
	BACKFILL	160,000	CY	6.25	1,000
	CAPSTONE	52,660	TN	25.00	1,317
	SCOUR PROTECTION	1	JOB	SUM	2,300
	RIPRAP	143,700	TN	20.00	2,874
	STONE FILL	16,606	TN	15.00	249
	GEOTEXTILE	13,740	SY	6.00	82
	FOUNDATION/LOCK DEWATERING	1	JOB	SUM	3,000
	COFFERDAM REMOVAL	1	JOB	SUM	81
	MARINE FACILITIES, TEMP. MOORING STR.	1	JOB	SUM	3,900
	CONCRETE				
	STRUCTURAL GROUTING	1	JOB	SUM	5,400
	CAST IN PLACE REINFORCED CONCRETE	40,100	CY	217	8,702
	CAST IN PLACE CONNECTIONS	964	CY	725	699
	PRECAST FLOOR SLABS	3,398	CY	150	510
	PRECAST CONCRETE APPROACH WALLS	1,532	CY	400	613
	PRECAST CULVERTS	4,990	CY	600	2,994
	PRECAST RUB PANELS	54,375	SF	40	2,175
	TREMIE CONCRETE, BASE	19,130	CY	165	3,156
	TREMIE CONCRETE, WALLS	4,527	CY	175	792
	STEEL REINFORCEMENT	5,012,500	LB	0.75	3,759
	CELL FILL, GRAVEL	113,556	CY	10	1,136
	METALS				
	SHEET PILING	470,823	SF	25.00	11,771
	SHEET PILE BRACING	1	JOB	SUM	600
	FOUNDATION PILING AND TESTING	1	JOB	SUM	15,000
	STRUCTURAL STEEL (GATES, VALVES, ETC.)	1	JOB	SUM	11,600
	STRUCT. STEEL (MISCELLANEOUS - LADDERS, ETC.)	1	JOB	SUM	3,000
	ELECTRICAL				
	ELECTRICAL SYSTEM		JOB	SUM	4,700
	INSTRUMENTATION	1	JOB	SUM	1,250
	MECHANICAL				
	GATE AND VALVE OPERATING MACHINERY	1	JOB	SUM	2,750
	MECHANICAL SYSTEMS	1	JOB	SUM	3,200
	MISCELLANEOUS	1	JOB	SUM	1,950
	05 LOCKS SUBTOTAL				110,999

LOCK AND DAM NO.16, LOCATION 4, TYPE C,
1200' LOCK ALTERNATIVE (PILE FOUNDED)

05.60.	**GUIDEWALLS**				
	SITEWORK				
	EXCAVATION	118,490	CY	4.5	533
	BACKFILL	73,640	CY	10	736
	SCOUR PROTECTION	211,130	TON	15	3,167
	CONCRETE				
	42" DIAMETER PILES	6,360	LF	400	2,544
	CAST IN PLACE REINFORCED CONCRETE	5,492	CY	150	824
	PRECAST BEAMS	17,325	CY	500	8,663
	PRECAST BEAM SEATS	262	CY	1000	262
	TREMIE CONCRETE	1,709	CY	500	855
	PERMANENT CELL FILL (C0NCRETE)	5,032	CY	200	1,006
	GROUT FOR BEAMS	778	CY	1000	778
	STEEL REINFORCEMENT	2,921,700	LB	0.75	2,191
	GRAVEL FILL	17,472	CY	10	175
	METALS				
	SHEET PILING	94,154	SF	25.00	2,354
	FOUNDATION PILING	1	JOB	SUM	318
	POST TENSIONING	2,030	LF	30	61
	STRUCTURAL STEEL	1	JOB	SUM	4,060
	05.60 GUIDEWALLS SUBTOTAL				28,527
09.	**CHANNEL WORK**	1	JOB	SUM	10,683
	PROJECT SUBTOTAL				176,925
	CONTINGENCIES 25%				44,231
	PROJECT SUBTOTAL WITH CONTINGENCIES				221,156
30.	**PLANNING, ENGINEERING, AND DESIGN (10%)**				22,000
31.	**CONSTRUCTION MANAGEMENT (10%)**				22,000
	PROJECT TOTAL				$ 265,000

LOCK AND DAM NO.16, LOCATION 4, TYPE C,
1200' LOCK ALTERNATIVE (PILE FOUNDED)

Subject	PILE FOUNDED LOCKS: 1200 ft lock L/D 16 Location 4 Quantities for Type C Lock	Date OCT 1996
Computed by Michael Cummings	Checked	Sheet 1 of 7

Gate Monolith
(typical)

Note: For quantities change the RED values in the cells of the dimensioned cross section shown.

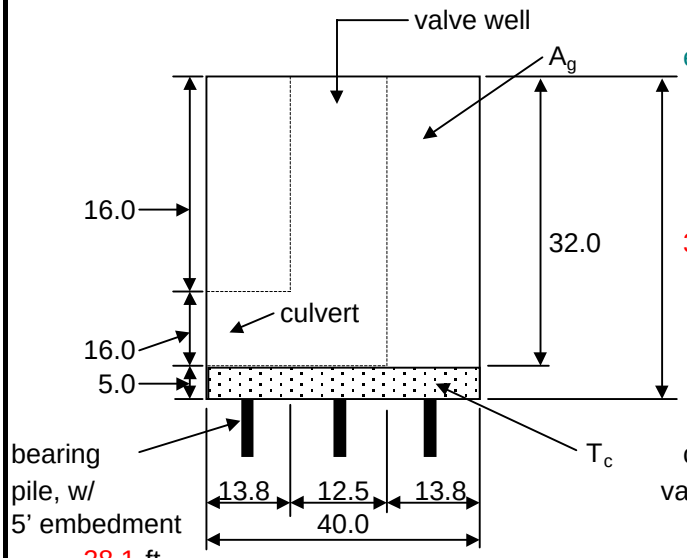

Cast in place concrete

A_g =	14,546.7	CY	U.S.
A_g =	17,561.5	CY	D.S.
Total =	32,108.1	CY	

Tremie concrete

T_c =	10,203.7	CY

The culverts are subtracted gross volume

	width	length	heighth	
culvert =	12.5	16.0	50.0	CF
valve well =	12.5	16.0	13.8	CF

28.1 ft

US gates length = 137.0 ft DS gates length = 164.5 ft

hght chk =	37.00	left
hght chk =	37.00	right

Lock Wall

Note: For quantities change the RED values in the cells of the dimensioned cross section

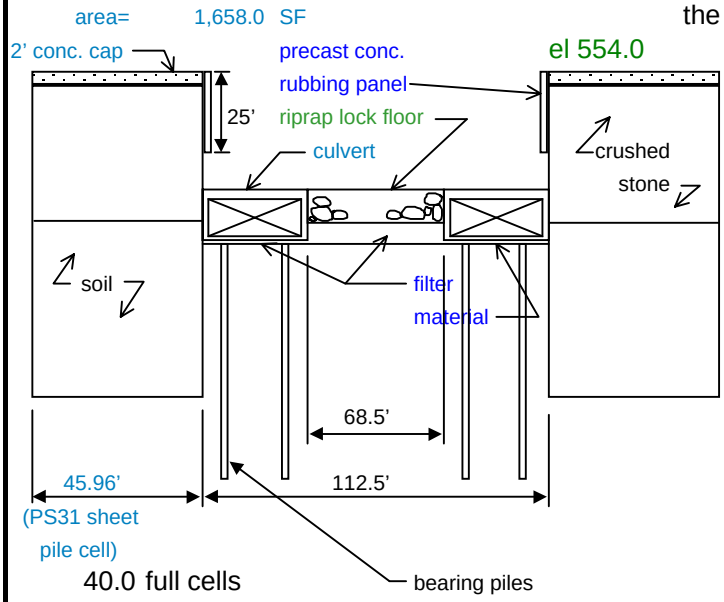

Cast-in-place concrete
2' concrete cap
Volume= 1,706.2 CY
Pre-cast concrete
precast rubbing panel
Area= 54,350.0 SF
Sheet pile cells
sheet piling
Area= 470,823.4 SF
Sheet pile cell fill
gravel
Volume= 113,556 CY

40.0 full cells
4.0 half cells
42.0 filler cells

58.1 ft total length 28.1 ft

RS Wall = 1,087.5 ft LS Wall = 1,087.5 ft

hght chk =	.00	left
hght chk =	.00	right

LOCK AND DAM NO.16, LOCATION 4, TYPE C,
1200' LOCK ALTERNATIVE (PILE FOUNDED)

Subject	PILE FOUNDED LOCKS: 1200 ft lock L/D 16 Location 4 Quantities for Type C Lock	Date OCT 1996
Computed by Michael Cummings	Checked	Sheet 2 of 7

Floor

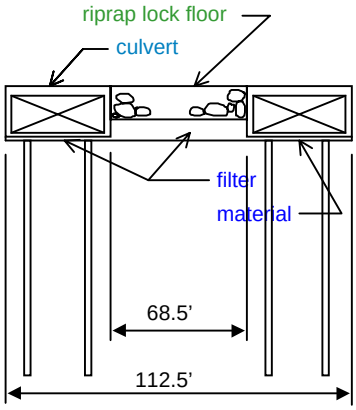

Riprap floor quantity
Volume= 11,956.7 CY
or 16,739.3 TONS

Filter material quantity
Volume= 12,932.1 CY
or 18,105.0 TONS

Bearing piles
precast floor slabs= 1,915.2 LF
precast culvert= 7,235.2 LF
Total Bearing Pile 9,150.4 LF

Length of floor = 1,270.0 ft width of floor = 73.0 ft

Note: For quantities change the RED values in the cells of the dimensioned cross section shown.

US Wall = 994.0 ft DS Wall = 1,016.0 ft

LOCK AND DAM NO.16, LOCATION 4, TYPE C,
1200' LOCK ALTERNATIVE (PILE FOUNDED)

Subject	PILE FOUNDED LOCKS: 1200 ft lock L/D 16 Location 4 Quantities for Type C Lock	Date OCT 1996
Computed by Michael Cummings	Checked	Sheet 3 of 7

cofferdam cell
typical
Area = 1,963.0 ft^2

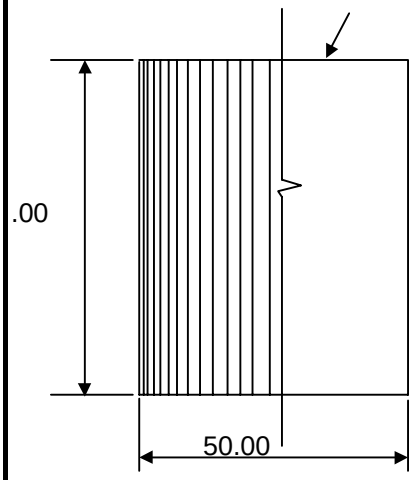

Note: For quantities change the RED values in the cells of the dimensioned cross section shown.

Pile type: PS31
Choose PSA23, PS27.5, or PS31

Area between cells:

Area =	855.0	SF
Distance =	15.91	ft
Length =	1.641	ft
Number in cell =	96	piles
No. in space =	21	piles

UPSTREAM

North or South length:	264.0	.4	modular numbers
East or West length:	330.0	.5	to aid in value search

DOWNSTREAM

North or South length:	264.0	.4	modular numbers
East or West length:	330.0	.5	to aid in value search

US	Total number of cells:	9.0	DS	Total number of cells:	9.0
US	Total number of cells:	11.0	DS	Total number of cells:	11.0

LOCK CHAMBER WALLS:

A. WALL MONOLITHS

1. River side walls
(a) Cast in place concrete
Volume = #REF! CY
(b) Tremie concrete
Volume = ######## CY
(c) Pre-cast concrete
Volume = .0 CY
(d) Pre-cast concrete (approach wall)
Volume = 0.0 CY
(e) Tremie concrete (approach wall)
Volume = - CY

1. Land side walls
(a) Cast in place concrete
Volume = #REF! CY
(b) Tremie concrete
Volume = ######## CY
(c) Pre-cast concrete
Volume = .0 CY
(d) Pre-cast concrete (approach wall)
Volume = 0.0 CY
(e) Tremie concrete (approach wall)
Volume = - CY

B. GATE MONOLITHS

1. Upstream cast in place concrete
Volume = 14,546.7 CY
Piles = 1700 LF

1. Downstream cast in place concrete
Volume = 17,561.5 CY
Piles = 2000 LF

LOCK AND DAM NO.16, LOCATION 4, TYPE C,
1200' LOCK ALTERNATIVE (PILE FOUNDED)

Subject	PILE FOUNDED LOCKS: 1200 ft lock L/D 16 Location 4 Quantities for Type C Lock	Date OCT 1996
Computed by Michael Cummings	Checked	Sheet 4 of 7

SILLS:

Length = 120.0 ft **Volume =** 7,893.0 CY of CIP concrete
111.0 ft
8.0 ft

COFFERDAM CELLS:

Upstream riverside
Total = piles
Total = SF of piling

Downstream riverside
Total = piles
Total = SF of piling

SUMMARY:

Lockwalls:

CONCRETE (Precast)
A. Lockwalls = - CY
B. Approach walls = - CY **Total =** - CY

CONCRETE (CIP, Cast in place)
A. Lockwalls = CY
B. Gate mono's = 32,108.1 CY
C. Sills = 7,893.0 CY **Total =** 40,100.0 CY

CONCRETE (Tremie)
A. Lockwalls = ########
B. Approach walls = - **Total =** ######## CY

HP PILING **Total =** .0 LF

BEARING PILES:
Total = 64,900.0 LF

Lock Floor:

CONCRETE:
A. Tremie concrete = .0 CY
B. Precast = .0 CY

BEARING PILES:
Total = 9,150.4 LF

Lockwall Sheet Pile Cells:

A. SHEETPILES
Total Area = 470,823 SF

B. FILL
Total Volume = 113,556 CY

LOCK AND DAM NO.16, LOCATION 4, TYPE C,
1200' LOCK ALTERNATIVE (PILE FOUNDED)

Subject	PILE FOUNDED LOCKS: L/D 16 Location 4 Quantities for Type C Lock	Date OCT 1996
Computed by Michael Cummings	Checked	Sheet 5 of 7

Upstream Guidewall Cell, Small

(typical)

Area = 700.0 SF

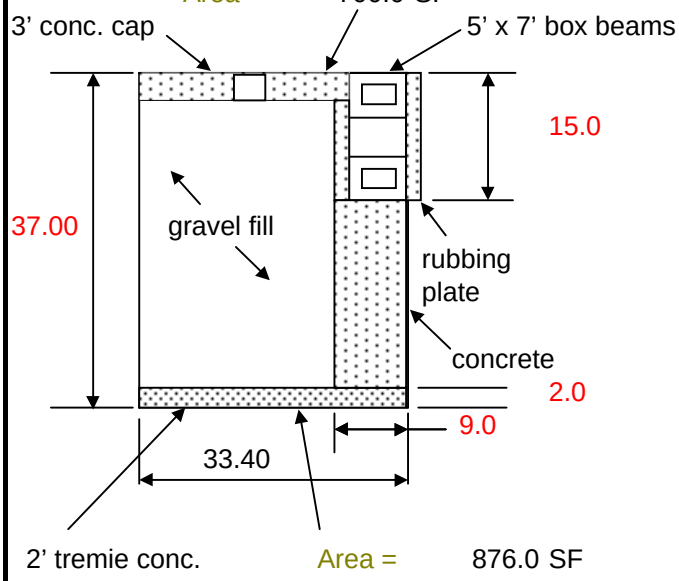

Area = 876.0 SF

Note: For quantities change the RED values in the cells of the dimensioned cross section shown.

Cast-in-Place Concrete			
3' conc. cap	=	77	CY
concrete	=	167	CY
Total	=	244	CY
for 7 cells	=	1,705	CY
Tremie concrete	=	65	CY
for 7 cells	=	455	CY
Precast Concrete			
5'x7' beam	=	889	CY
rubbing pl.	=	500	CY
Total	=	1,389	CY
Gravel fill	=	832	CY
for 7 cells	=	5,824	CY
Sheet Piling	=	3,882	SF
for 7 cells	=	27,177	SF

Upstream Guidewall Cell, Large

(typical)

Area = 2,124.0 SF

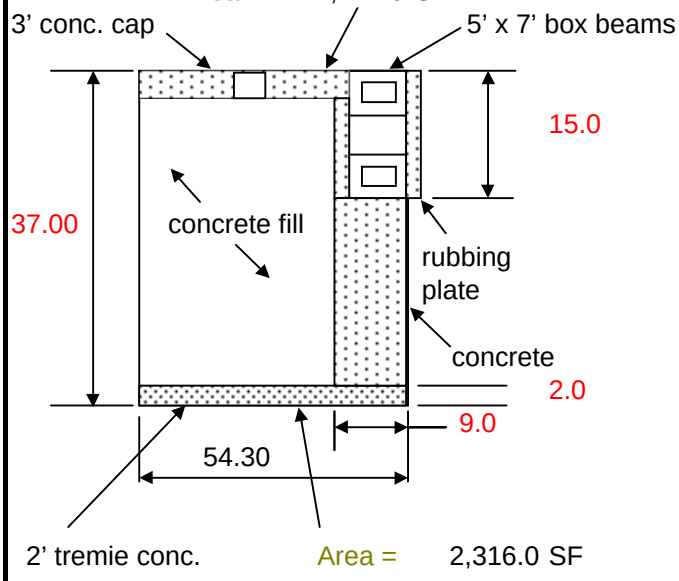

Area = 2,316.0 SF

Note: For quantities change the RED values in the cells of the dimensioned cross section shown.

Cast-in-Place Concrete			
3' conc. cap	=	235	CY
concrete	=	212	CY
Total	=	447	CY
Tremie concrete	=	172	CY
Permanent Cell Fill		2,516	CY
Sheet Piling	=	6,312	SF

LOCK AND DAM NO.16, LOCATION 4, TYPE C,
1200' LOCK ALTERNATIVE (PILE FOUNDED)

Subject	PILE FOUNDED LOCKS: L/D 16 Location 4 Quantities for Type C Lock	Date OCT 1996
Computed by Michael Cummings	Checked	Sheet 6 of 7

Downstream Guidewall Cell, Small

(typical)

Area = 700.0 SF

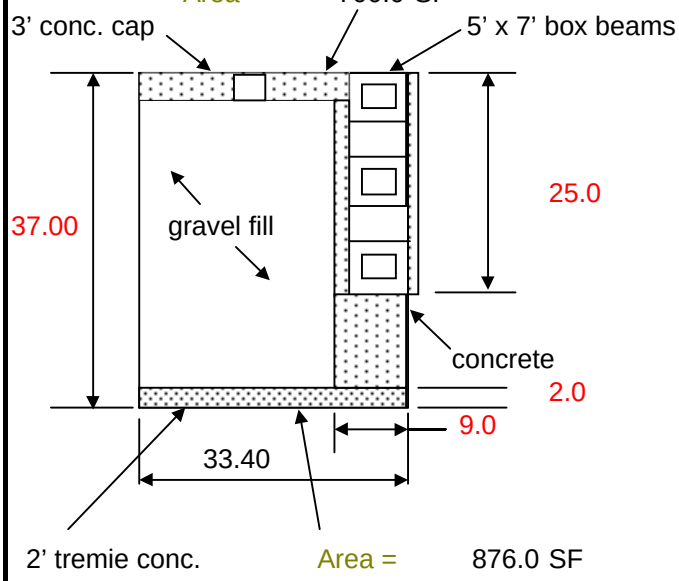

Area = 876.0 SF

Note: For quantities change the RED values in the cells of the dimensioned cross section shown.

Cast-in-Place Concrete			
3' conc. cap	=	77	CY
concrete	=	118	CY
Total	=	195	CY
for 14 cells	=	2,733	CY
Tremie concrete	=	65	CY
for 14 cells	=	910	CY
Precast Concrete			
5'x7' beam	=	2,667	CY
rubbing pl.	=	1,667	CY
Total	=	4,333	CY
Gravel fill	=	832	CY
for 14 cells	=	11,648	CY
Sheet Piling	=	3,882	SF
for 14 cells	=	54,353	SF

Downstream Guidewall Cell, Large

(typical)

Area = 2,124.0 SF

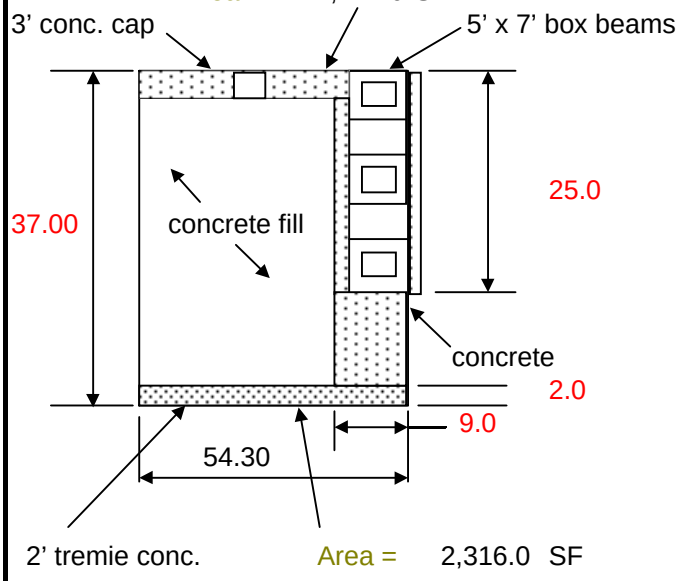

Area = 2,316.0 SF

Note: For quantities change the RED values in the cells of the dimensioned cross section shown.

Cast-in-Place Concrete			
3' conc. cap	=	235	CY
concrete	=	373	CY
Total	=	608	CY
Tremie concrete	=	172	CY
Permanent Cell Fill		2,516	CY
Sheet Piling	=	6,312	SF

LOCK AND DAM NO.16, LOCATION 4, TYPE C,
1200' LOCK ALTERNATIVE (PILE FOUNDED)

Subject	PILE FOUNDED LOCKS: L/D 16 Location 4 Quantities for Type C Lock	Date OCT 1996
Computed by Michael Cummings	Checked	Sheet 7 of 7

LOCK GUIDEWALLS :

A. UPSTREAM GUIDEWALL

1. Cast-in-place concrete

Volume = 2,152 CY

2. Precast concrete

Volume = 1,389 CY

3. Gravel Fill

Volume = 5,824 CY

4. Sheet Piling

Area = 33,488 SF

5. Permanent Cell Fill

Volume = 2,516 CY

6. Tremie Concrete

Volume = 627 CY

B. DOWNSTREAM GUIDEWALL

1. Cast-in-place concrete

Volume = 3,341 CY

2. Precast concrete

Volume = 4,333 CY

3. Gravel Fill

Volume = 11,648 CY

4. Sheet Piling

Area = 60,665 SF

5. Permanent Cell Fill

Volume = 2,516 CY

6. Tremie Concrete

Volume = 1,082 CY

Guidewall Summary

Total Cast-in-Place Concrete	5,492	CY
Total Precast Concrete	5,722	CY
Total Gravel Fill	17,472	CY
Total Sheet Piling	94,154	SF
Total Permanent Cell Fill	5,032	CY
Total Tremie Concrete	1,709	CY

LOCK AND DAM NO. 15UP, LOCATION 2, TYPE B
1200' LOCK ALTERNATIVE (ROCK-FOUNDED)

ACCOUNT CODE	ITEM	QUANTITY	UNIT	UNIT PRICE ($'s)	AMOUNT ($1,000's)
01.	LANDS AND DAMAGES				
	REAL ESTATE	1	JOB	SUM	20
04.	DAMS				
	04 DAMS SUBTOTAL				0
05.	LOCKS				
	SITEWORK				
	MOBILIZATION	1	JOB	SUM	8,000
	DEMOLITION	1	JOB	SUM	1,117
	ROCK EXCAVATION	19,965	CY	45	898
	LOCK DEWATERING	1	JOB	SUM	1,250
	COFFERDAM REMOVAL	1	JOB	SUM	81
	MARINE FACILITIES, TEMP MOORING STRUCTURE	1	JOB	SUM	3,900
	CONCRETE				
	CAST IN PLACE REINFORCED CONCRETE	27,241	CY	217	5,911
	PRECAST CONCRETE CHAMBER AND APPROACH WALLS, FLOOR	11,110	CY	400	4,444
	TREMIE CONCRETE	9,898	CY	165	1,633
	PRESTRESSING/POST TENSION STEEL	1,110,000	LB	2.5	2,775
	FURNISH AND SET LANDING PADS	74	EA	19000	1,406
	SET PRECAST WALL UNITS	56	EA	16000	896
	FLOAT IN AND SET MITER GATE SILL	1	EA	140000	140
	STEEL REINFORCEMENT	1,634,460	LB	0.75	1,226
	METALS				
	SHEET PILING	1	JOB	SUM	220
	STRUCTURAL STEEL (GATES, VALVES, TRASHRACKS)	1	JOB	SUM	3,250
	STRUCTURAL STEEL (MISCELLANEOUS - LADDERS, ETC.	1	JOB	SUM	3,040
	ELECTRICAL				
	ELECTRICAL SYSTEM	1	JOB	SUM	4,700
	MECHANICAL				
	GATE AND VALVE OPERATING MACHINERY	1	JOB	SUM	2,750
	MECHANICAL SYSTEMS	1	JOB	SUM	3,200
	MISCELLANEOUS	1	JOB	SUM	1,950
	05 LOCKS SUBTOTAL				52,788
05.60.	GUIDEWALLS				
	CONCRETE				
	CAST IN PLACE REINFORCED CONCRETE	7,394	CY	280.00	2,070
	PRECAST CONCRETE BEAMS (PRESTRESSED)	4,665	LF	1,170.00	5,458
	PRECAST CONCRETE (W/REINFORCEMENT)	2,107	CY	400.00	843
	TREMIE CONCRETE (WITH REINFORCEMENT)	1,709	CY	210.00	359
	GRAVEL FILL	22,680	CY	15.00	340
	METALS				
	SHEETPILING FOR CELLS (PS31)	90,890	SF	25.00	2,272
	SHEETPILE CUTOFF WALL (PZ35)	34,000	SF	30.00	1,020
	STRUCTURAL STEEL	1	JOB	SUM	3,811
	05.60 GUIDEWALLS SUBTOTAL				16,174
09.	CHANNEL WORK	1	JOB	SUM	910
	PROJECT SUBTOTAL				69,891
	CONTINGENCIES 25%				17,473
	PROJECT SUBTOTAL WITH CONTINGENCIES				87,000
30.	PLANNING, ENGINEERING, AND DESIGN (10%)				9,000
31.	CONSTRUCTION MANAGEMENT (10%)				9,000
	PROJECT TOTAL				105,000

		QUANTITY CALCULATIONS									
		L/D 15UP Location 2, Type B						Sheet 1_ of 4_			
1	Rock excavation										
	under riverward wall:										
	[(28'x7.4')+(2x7.4'x1'x0.5)+(2x5'x3')+(2x3'x3'x0.5)] x 604'						=	146,409.60	CF	5,422.58	CY
	under landward wall:										
	[(28'x7.4')+(2x7.4'x1'x0.5)+(2x5'x3')+(2x3'x3'x0.5)] x 604'						=	146,409.60	CF	5,422.58	CY
	gate bay monolith										
	70' x 14.9' x 166'						=	173,138.00	CF	6,412.52	CY
	lock chamber	1.1	x	110	x	604	=	73,084.00	CF	2,706.81	CY
										19,964.49	CY
2	Anchor bars (#8 x 14.5')										
	riverward wall										
	(2.67 lbs x 14.5' x 6 ea) x 30 locations = 6,968 LB							6,968.00	LB		
	landward wall										
	(2.67 lbs x 14.5' x 6 ea) x 30 locations = 6,968 LB							6,968.00	LB		
3	Steel footing box (1/2" steel plate)									13,936.00	LB
	riverward wall										
	20.42 lb x [(6'x3'x2)+(4'x3'x2)] = 1,225 LB @ 30 locations							36,750.00	LB		
	landward wall										
	20.42 lb x [(6'x3'x2)+(4'x3'x2)] = 1,225 LB @ 30 locations							36,750.00	LB		
4	Concrete									73,500.00	LB
	riverward wall										
	-bottom lift (tremie)										
	Rock excav. - precast lockwall unit = 5,422.6 CY - 474 CY =									4,948.60	CY
	-2nd lift (reinforced)										
	outside wall, lower section	11.0	x	6.67	x	674	=	49,451.38	CF		
	inside wall, lower section	11.0	x	6.67	x	674	=	49,451.38	CF		
	outside wall, upper section	1.5	x	3.67	x	674	=	3,710.37	CF		
	inside wall, upper section	1.5	x	3.67	x	674	=	3,710.37	CF		
	-3rd lift (reinforced									3,937.91	CY
	one section	13.75	x	24	x	674	=	222,420.00	CF		
	-4th lift (reinforced)									8,237.78	CY
	outside wall	6	x	5	x	674	=	20,220.00	CF		
	inside wall	6	x	5	x	674	=	20,220.00	CF		
										1,497.78	CY
	landward wall										
	-bottom lift (tremie)										
	Rock excav. - precast lockwall unit = 5,317 CY - 474 CY =									4,843.00	CY
	-2nd lift (reinforced)										
	outside wall, lower section	11.0	x	6.67	x	674	=	49,451.38	CF		
	inside wall, lower section	11.0	x	6.67	x	674	=	49,451.38	CF		
	outside wall, upper section	1.5	x	3.67	x	674	=	3,710.37	CF		
	inside wall, upper section	1.5	x	3.67	x	674	=	3,710.37	CF		
	-3rd lift (reinforced									3,937.91	CY
	one section	13.75	x	24	x	674	=	222,420.00	CF		
										8,237.78	CY
	-4th lift (reinforced)										
	outside wall	6	x	5	x	674	=	20,220.00	CF		
	inside wall	6	x	5	x	674	=	20,220.00	CF		
										1,497.78	CY
	Total Concrete									37,138.53	CY

LOCK AND DAM NO. 15UP, LOCATION 2, TYPE C
(ROCK-FOUNDED)

CCOUNT CODE	ITEM	QUANTITY	UNIT	UNIT PRICE ($'s)	AMOUNT ($1,000's)
01.	LANDS AND DAMAGES				
	REAL ESTATE	1	JOB	SUM	20
04.	DAMS				
	04 DAMS SUBTOTAL				0
05.	LOCKS				
	SITEWORK				
	MOBILIZATION	1	JOB	SUM	8,000
	DEMOLITION	1	JOB	SUM	1,117
	ROCK EXCAVATION	12,142	CY	45	546
	LOCK DEWATERING	1	JOB	SUM	1,250
	COFFERDAM REMOVAL	1	JOB	SUM	81
	MARINE FACILITIES, TEMP MOORING STRUCTURE	1	JOB	SUM	3,900
	CONCRETE				
	CAST IN PLACE REINFORCED CONCRETE	25,525	CY	217	5,539
	PRECAST CONCRETE CHAMBER AND APPROACH WALL	2,400	CY	400	960
	TREMIE CONCRETE	9,808	CY	165	1,618
	PRESTRESSING STEEL	240,000	LB	2.5	600
	FURNISH AND SET LANDING PADS	18	EA	19000	342
	SET CULVERT UNITS	88	EA	16000	1,408
	FLOAT IN AND SET MITER GATE SILL	1	EA	140000	140
	STEEL REINFORCEMENT	1,531,500	LB	0.75	1,149
	TIMBER				
	12"X12" TIMBER FENDERS	13,480	LF	25	337
	METALS				
	SHEET PILING AND BRACING	1	JOB	SUM	2,900
	STRUCTURAL STEEL (GATES, VALVES, TRASHRACKS)	1	JOB	SUM	3,250
	STRUCTURAL STEEL (MISCELLANEOUS - LADDERS, ETC.)	1	JOB	SUM	3,040
	ELECTRICAL				
	ELECTRICAL SYSTEM	1	JOB	SUM	4,700
	MECHANICAL				
	GATE AND VALVE OPERATING MACHINERY	1	JOB	SUM	2,750
	MECHANICAL SYSTEMS	1	JOB	SUM	3,200
	MISCELLANEOUS	1	JOB	SUM	1,950
	05 LOCKS SUBTOTAL				48,777
05.60.	GUIDEWALLS				
	CONCRETE				
	CAST IN PLACE REINFORCED CONCRETE	7,042	CY	280.00	1,972
	PRECAST CONCRETE BEAMS (PRESTRESSED)	4,680	LF	1,170.00	5,476
	PRECAST CONCRETE (W/REINFORCEMENT)	2,114	CY	400.00	846
	TREMIE CONCRETE (WITH REINFORCEMENT)	1,709	CY	210.00	359
	GRAVEL FILL	22,680	CY	15.00	340
	METALS				
	SHEETPILING FOR CELLS (PS31)	90,890	SF	25.00	2,272
	SHEETPILE CUTOFF WALL (PZ35)	34,000	SF	30.00	1,020
	STRUCTURAL STEEL	1	JOB	SUM	3,811
	05.60 GUIDEWALLS SUBTOTAL				16,095
09.	CHANNEL WORK	1	JOB	SUM	910
	PROJECT SUBTOTAL				65,803
	CONTINGENCIES 25%				16,451
	PROJECT SUBTOTAL WITH CONTINGENCIES				82,000
30.	PLANNING, ENGINEERING, AND DESIGN (10%)				8,000
31.	CONSTRUCTION MANAGEMENT (10%)				8,000
	PROJECT TOTAL				$ 98,000

		QUANTITY CALCULATIONS									
		L/D 15UP Location 2, Type C						Sheet 1_ of 3_			
1	Rock excavation										
	under riverward wall:										
	[(28'x4')+(2x8'x2'x0.5)+(2x1'x8')+(2x2'x4')+(2x4'x1'x0.5)] x 674'						=	110,536.00	CF	4,093.93	CY
	under landward wall:										
	[(28'x4')+(2x8'x2'x0.5)+(2x1'x8')+(2x2'x4')+(2x4'x1'x0.5)] x 674'						=	110,536.00	CF	4,093.93	CY
	gate bay monolith										
	70' x 13' x 110' = 100,100 CF						=	100,100.00	CF	3,707.41	CY
	lock chamber	0.1	x	110	x	604	=	6,644.00	CF	246.07	CY
										12,141.33	CY
2	Concrete										
	riverward wall										
	-bottom lift (tremie)										
	Rock excav. - sheet pile wall = 4,904 CY - 0 CY =									4,904.00	CY
	-2nd lift (reinforced)										
	outside wall	13.5	x	6	x	674	=	54,594.00	CF		
	inside wall	13.5	x	5	x	674	=	45,495.00	CF		
	-3rd lift (reinforced)									3,707.00	CY
	elev.T - elev. A	4.50	x	26	x	674	=	78,858.00	CF		
	-4th lift (reinforced)									2,920.67	CY
	outside wall	7	x	9	x	674	=	42,462.00	CF		
	inside wall	7	x	8	x	674	=	37,744.00	CF		
	landward wall									2,970.59	CY
	-bottom lift (tremie)										
	Rock excav. - sheet pile wall = 4,904 CY - 0 CY =									4,904.00	CY
	-2nd lift (reinforced)										
	outside wall	13.5	x	6	x	674	=	54,594.00	CF		
	inside wall	13.5	x	5	x	674	=	45,495.00	CF		
	-3rd lift (reinforced									3,707.00	CY
	elev.T - elev. A	4.50	x	27	x	674	=	81,891.00	CF		
	-4th lift (reinforced)									3,033.00	CY
	outside wall	7	x	5	x	674	=	23,590.00	CF		
	inside wall	7	x	5	x	674	=	23,590.00	CF		
										1,747.41	CY
	Total Concrete									27,893.67	CY
3	Steel tie rods @ 11' centers	61	x	2	=	122	EA				
4	Steel sheet pile wall, PZ27										
	riverward wall	41.3	x	2	x	674	=	55,605.00	SF		
	landward wall	41.3	x	2	x	674	=	55,605.00	SF		
										111,210.00	SF
5	Timber waler	10	x	2	x	674	=	13,480.00	LF		
6	Precast culvert liner										
	riverward wall	40.5	x	637	x	0.75	=	19,348.88	CF		
	landward wall	40.5	x	637	x	0.75	=	19,348.88	CF		
								38,697.75	CF		
										1,433.25	CY

Location 3, Type B, Rock

ACCOUNT CODE	ITEM L/D 15	QUANTITY	UNIT	NIT PRICE ($'s)	AMOUNT ($1,000's)
01.	LANDS AND DAMAGES				
	REAL ESTATE	1	JOB	SUM	20
04.	DAMS				0
05.	LOCKS				
	SITEWORK				
	MOBILIZATION	1	JOB	SUM	8,000
	DEMOLITION AND REHABILITATION	1	JOB	SUM	1,800
	DREDGING	105,530	CY	4.50	475
	ROCK EXCAVATION	44,100	CY	45.00	1,985
	EXTENSION OF EXISTING DOWNSTREAM GUIDEWALL	1	JOB	SUM	7,700
	COFFERDAM FILL (DOWNSTREAM CLOSURE)	4152	CY	14.50	60
	EXISTING LOCK DEWATERING	1	JOB	SUM	440
	NEW LOCK DEWATERING	1	JOB	SUM	440
	CONCRETE				
	CAST IN PLACE REINFORCED CONCRETE	45,570	CY	280.00	12,760
	PRECAST CONCRETE (W/REINFORCEMENT)	7,900	CY	400.00	3,160
	SET LANDING PADS & WALL UNITS	1	JOB	SUM	3,070
	TREMIE CONCRETE (WITH REINFORCEMENT)	3,330	CY	210.00	699
	GRAVEL FILL	10,570	CY	15.00	159
	METALS				
	SHEETPILING (DOWNSTREAM CLOSURE, PSA23)	14,700	SF	30.00	441
	STRUCTURAL STEEL (GATES, VALVES, TRASHRACKS,	1	JOB	SUM	3,250
	STRUCTURAL STEEL (MISCELLANEOUS - LADDERS, ET	1	JOB	SUM	2,500
	ELECTRICAL				
	ELECTRICAL SYSTEM	1	JOB	SUM	4,700
	MECHANICAL				
	GATE AND VALVE OPERATING MACHINERY	1	JOB	SUM	2,053
	MECHANICAL SYSTEMS	1	JOB	SUM	2,900
	MISCELLANEOUS	1	JOB	SUM	5,659
	05 LOCKS SUBTOTAL				62,250
05.60.	GUIDEWALLS				
	CONCRETE				
	CAST IN PLACE REINFORCED CONCRETE	13,960	CY	280.00	3,909
	PRECAST CONCRETE BEAMS (PRESTRESSED)	6,000	LF	1,170.00	7,020
	PRECAST CONCRETE (W/REINFORCEMENT)	2,114	CY	400.00	846
	TREMIE CONCRETE (WITH REINFORCEMENT)	15,186	CY	210.00	3,189
	GRAVEL FILL	24,679	CY	15.00	370
	METALS				
	SHEETPILING FOR CELLS (PS31)	127,390	SF	25.00	3,185
	SHEETPILE CUTOFF WALL (PZ35)	32,775	SF	30.00	983
	STRUCTURAL STEEL	1	JOB	SUM	3,811
	05.60 GUIDEWALLS SUBTOTAL				23,313
09.	CHANNEL WORK	1	JOB	SUM	910
	PROJECT SUBTOTAL				86,493
	CONTINGENCIES (25%)				21,623
	PROJECT SUBTOTAL WITH CONTINGENCIES				108,116
30.	PLANNING, ENGINEERING, AND DESIGN (10%)				11,000
31.	CONSTRUCTION MANAGEMENT (10%)				11,000
	PROJECT TOTAL				130,116

TOTAL BASIC LOCK COST (O4., 05., 05.60.) WITH CONTINGENCIES, PED, & CM* **$ 130,000**

*(EXCLUDES REAL ESTATE, RELOCATION, AND CHANNEL WORK WHICH ARE MORE SITE-SPECIFIC.)

Subject	ROCK FOUNDED LOCKS: L/D 15 Location 3 Quantities for Type B Lock, Modular Construction	Date SEP 96
Computed by Michael Cummings	Checked David R. Wehrley	Sheet 1 of 5

Riverward Lockwall
(Including the miter gate monolith)

Note: For quantities change the Blue values in the cross section.

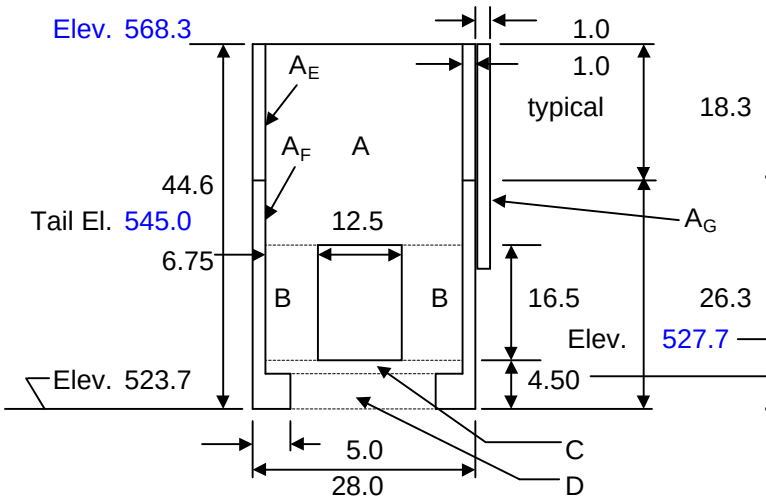

Cast in place concrete		
A_A =	612.3	SF
A_B =	222.8	SF
A_C =	26.0	SF
Total Area =	861.0	SF
Volume =	27,585	CY
Pre-cast concrete		
A_E =	36.5	SF
A_F =	80.6	SF
A_G =	32.3	SF
Total Area =	149.4	SF
Volume =	4,785	CY
Tremie concrete		
A_D =	63.0	SF
Volume =	2,018	CY

NOTE!: THE FLOOR ELEVATION AND BASE OF WALL ELEV. (REQ'D TO MEET CRITERIA) WOULD RESULT IN AN UNREASONABLE AMOUNT OF ROCK EXCAVATION. FUTURE STUDIES WOULD HAVE TO EXAMINE THE TRADEOFFS IN FIRST COST VERSUS PERFORMANCE IF CHAMBER DEPTH CRITERIA WERE RELAXED.

Wall Length = 865 ft

Landward Lockwall ("l-wall")
(Including the miter gate monolith)

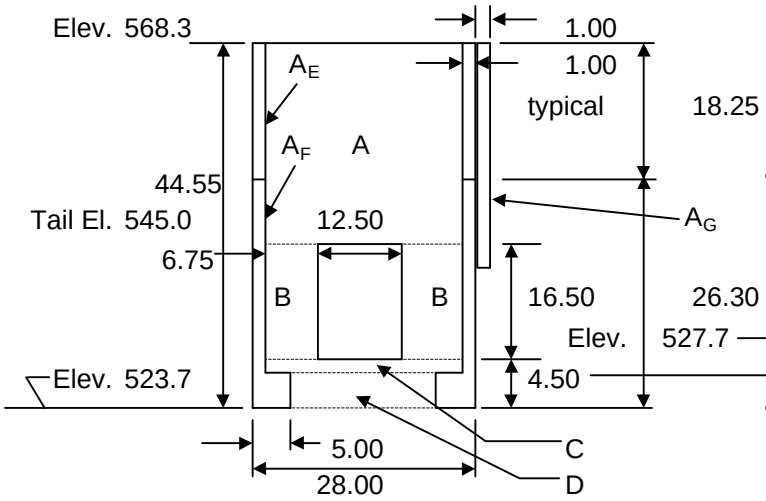

Cast in place concrete		
A_A =	612.3	SF
A_B =	222.8	SF
A_C =	26.0	SF
Total Area =	861.0	SF
Volume =	17,986	CY
Pre-cast concrete		
A_E =	36.5	SF
A_F =	80.6	SF
A_G =	32.3	SF
Total Area =	149.4	SF
Volume =	3,120	CY
Tremie concrete		
A_D =	63.0	SF
Volume =	1,316	CY

Wall Length = 564 ft

Subject		Date
L/D 15 Location 3 Quantities for Type B Lock, Modular Construction		SEP 96
Computed by Michael Cummings	Checked David R. Wehrley	Sheet 2 of 5

Typical cell for downstream closure cofferdam

Change blue value.

Plan Area = 707 ft^2

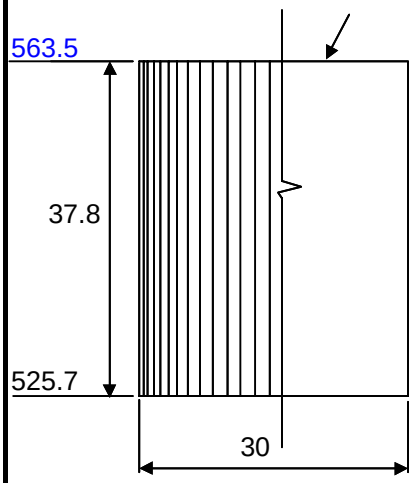

Pile type: psa23 Length = 1.33 ft
Choose PSA23, PS27.5, or PS31

Area of arcs =	845	SF	(Ref. platr3b1.dgn)
Area of 3 cells =	2,121	SF	
Fill Quantity =	4,152	CY	
Circumference of 1 cell =	94.2	FT	
Perimeter of all arcs =	106.9	FT	(Ref. platr3b1.dgn)
Sheetpile Quantity =	14,729	SF	

QUANTITY WRAP-UP (EXCLUDING GUIDEWALLS):

A. CAST-IN-PLACE CONCRETE

Riverwall =	27,585	CY
I-wall =	17,986	CY
Total =	**45,570**	CY

B. PRECAST CONCRETE

Riverwall =	4,785	CY
I-wall =	3,120	CY
Total =	**7,900**	CY

C. TREMIE CONCRETE

Riverwall =	2,018	CY
I-wall =	1,316	CY
Total =	**3,330**	CY

D. COFFERDAM FILL

Total =	**4,150**	CY

E. COFFERDAM SHEETPILING

Total =	**14,700**	SF

Subject		Date
L/D 15 Location 3 Quantities for Type B Lock, Guardwalls		SEP 96
Computed by Michael Cummings	Checked	Sheet 3 of 5

Upstream Guardwall Cell (typical of 14)

1200' Long Guardwall

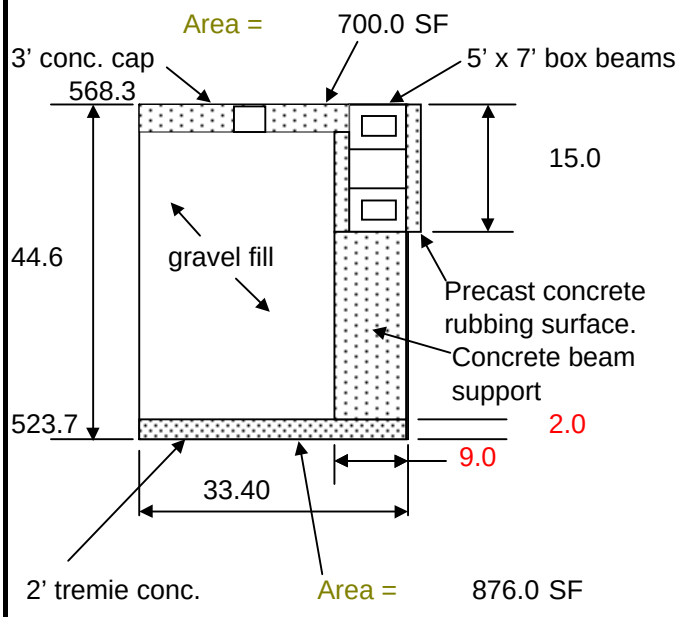

Cast-in-Place Concrete

3' conc. cap	=	78	CY
Beam support	=	220	CY
Total	=	298	CY
For 14 cells	=	4,167	CY
Tremie concrete	=	65	CY
For 14 cells	=	910	CY

Precast Concrete (for entire guardwall length)

5'x7' beam	=	1,741	CY
rubbing pl.	=	979	CY
Total	=	2,720	CY
Gravel fill	=	1,028	CY
For 14 cells	=	14,396	CY
Sheet Piling	=	4,675	SF
For 14 cells	=	65,444	SF

End Cell of Guardwall

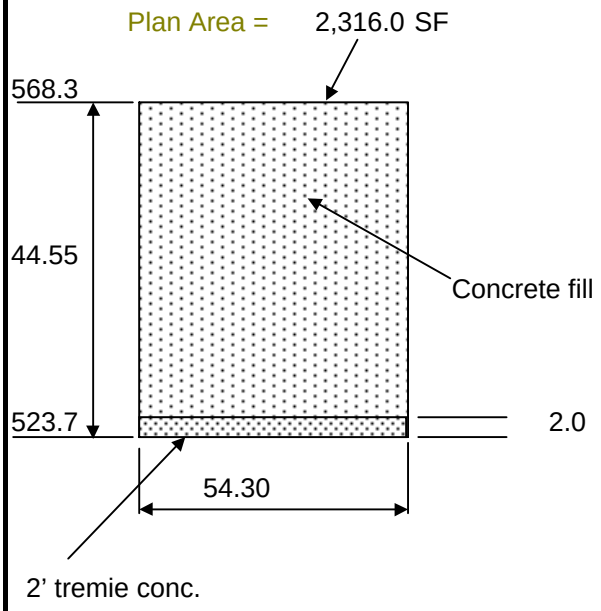

Cast-in-Place Concrete Volume	=	3,650	CY
Tremie concrete	=	172	CY
Sheet Piling (PS31)	=	7,600	SF

Subject		Date
L/D 15 Location 3 Quantities for Type B Lock, Crane-In Construcion		SEP 96
Computed by Michael Cummings	Checked	Sheet 4 of 5

Downstream Guardwall Cell (typical of 14) 817' Long Guardwall

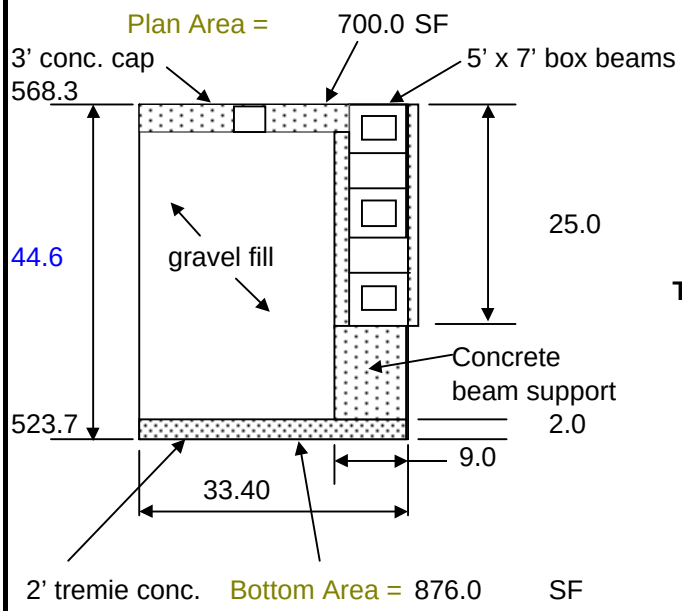

Cast-in-Place Concrete

3' conc. cap	=	78	CY
Beam support	=	172	CY
Total	=	249	CY
for 10 cells	=	2,493	CY
Tremie concrete	=	65	CY
for 10 cells	=	650	CY
Precast Concrete			
5'x7' beam	=	1,816	CY
rubbing pl.	=	1,135	CY
Total	=	2,950	CY
Gravel fill	=	1,028	CY
for 10 cells	=	10,283	CY
Sheet Piling	=	4,675	SF
for 10 cells	=	46,746	SF

End Cell of Guardwall

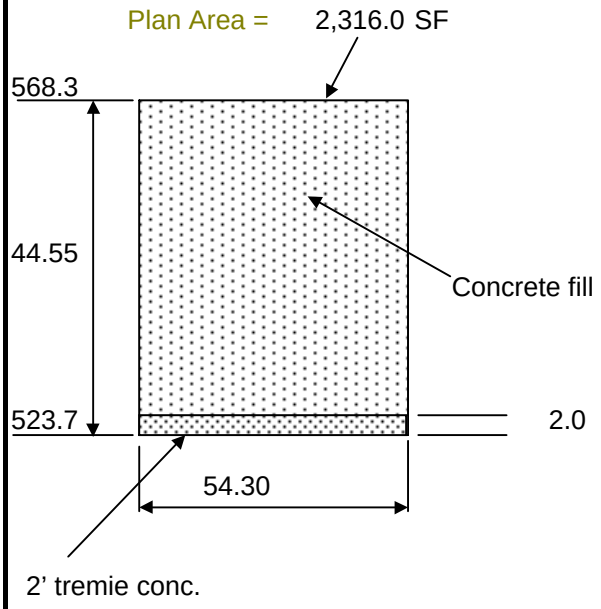

Cast-in-Place Concrete Volume	=	3,650	CY
Tremie concrete	=	172	CY
Sheet Piling (PS31)	=	7,600	SF

Subject		Date
L/D 15 Location 3 Quantities for Type B Lock, Crane-In Construcion		SEP 96
Computed by Michael Cummings	Checked	Sheet 5 of 5

GUARDWALL QUANTITY WRAP-UP :

A. CAST-IN-PLACE CONCRETE

Upstream =	7,817	CY
Downstream =	6,143	CY
TOTAL=	13,960	CY

B. PRECAST CONCRETE

Upstream Beams =	1,741	CY
ownstream Beams =	1,816	CY
TOTAL=	3,556	CY

Upstream Panels =	979	CY
Downstream Panels =	1,135	CY
TOTAL=	2,114	CY

C. GRAVEL FILL

Upstream =	14,396	CY
Downstream =	10,283	CY
TOTAL=	24,679	CY

D. SHEETPILING

Upstream =	73,044	CY
Downstream =	54,346	CY
TOTAL=	127,390	CY

E. TREMIE CONCRETE

Upstream =	1,082	CY
Downstream =	822	CY
TOTAL=	1,904	CY

LOCATION 3, TYPE C
1200' LOCK ALTERNATIVE (ROCK FOUNDED)

CCOUNT CODE	ITEM L/D15	QUANTITY	UNIT	UNIT PRICE ($'s)	AMOUNT ($1,000's)
01.	**LANDS AND DAMAGES**				
	REAL ESTATE	1	JOB	SUM	20
04.	**DAMS**				
	04 DAMS SUBTOTAL				0
05.	**LOCKS**				
	SITEWORK				
	MOBILIZATION	1	JOB	SUM	8,000
	DEMOLITION	1	JOB	SUM	1,800
	DREDGING	105,530	CY	4.50	475
	ROCK EXCAVATION	44,100	CY	45	1,985
	EXTENSION OF EXISTING DOWNSTREAM GUIDEWALL	1	JOB	SUM	7,700
	COFFERDAM FILL (DOWNSTREAM CLOSURE)	4,152	CY	14.50	60
	EXISTING LOCK DEWATERING	1	JOB	SUM	440
	NEW LOCK DEWATERING	1	JOB	SUM	440
	CONCRETE				
	CAST IN PLACE REINFORCED CONCRETE	32,328	CY	280	9,052
	PRECAST CONCRETE (W/REINFORCEMENT)	23,017	CY	400	9,207
	TREMIE CONCRETE	2,664	CY	165	439
	PERMANENT CELL FILL - GRAVEL (RIVERWALL)	31,374	CY	15.00	471
	PERMANENT CELL FILL - CONCRETE (I-WALL)	22,845	CY	280.00	6,397
	PRECAST PANELS FOR CELLULAR WALL (RIVERWALL)	2,063	CY	600	1,238
	PRECAST PANELS FOR CELLULAR WALL (I-WALL)	2,690	CY	800	2,152
	METALS				
	SHEET PILING (DOWNSTREAM CLOSURE, PSA23)	14,729	SF	25.00	368
	SHEET PILING - PERMANENT PSA23 (LOCKWALL)	229,198	SF	25.00	5,730
	STRUCTURAL STEEL (GATES, VALVES, TRASHRACKS)	1	JOB	SUM	3,250
	STRUCTURAL STEEL (MISCELLANEOUS - LADDERS, ETC.)	1	JOB	SUM	2,500
	ELECTRICAL				
	ELECTRICAL SYSTEM	1	JOB	SUM	4,700
	MECHANICAL				
	GATE AND VALVE OPERATING MACHINERY	1	JOB	SUM	2,750
	MECHANICAL SYSTEMS	1	JOB	SUM	3,200
	MISCELLANEOUS	1	JOB	SUM	7,235
	05 LOCKS SUBTOTAL				79,589
05.60.	**GUIDEWALLS**				
	CONCRETE				
	CAST IN PLACE REINFORCED CONCRETE	13,943	CY	280.00	3,904
	PRECAST CONCRETE BEAMS (PRESTRESSED)	6,000	LF	1,170.00	7,020
	PRECAST CONCRETE PANELS (W/REINFORCEMENT)	2,114	CY	400.00	846
	TREMIE CONCRETE (WITH REINFORCEMENT)	1,904	CY	210.00	400
	GRAVEL FILL	24,648	CY	15.00	370
	METALS				
	SHEETPILING FOR CELLS (PS31)	127,247	SF	25.00	3,181
	SHEETPILE CUTOFF WALL (PZ35)	34,000	SF	30.00	1,020
	STRUCTURAL STEEL	1	JOB	SUM	3,811
	05.60 GUIDEWALLS SUBTOTAL				20,551
09.	**CHANNEL WORK**	1	JOB	SUM	910
	PROJECT SUBTOTAL				101,070
	CONTINGENCIES 25%				25,267
	PROJECT SUBTOTAL WITH CONTINGENCIES				126,337
30.	**PLANNING, ENGINEERING, AND DESIGN (10%)**				13,000
31.	**CONSTRUCTION MANAGEMENT (10%)**				13,000
	PROJECT TOTAL				152,337

TOTAL BASIC LOCK COST (O4., 05., 05.60.) WITH CONTINGENCIES, PED, & CM* **$ 152,000**

*(EXCLUDES REAL ESTATE, RELOCATION, AND CHANNEL WORK WHICH ARE MORE SITE-SPECIFIC.)

Subject	ROCK FOUNDED LOCKS: L/D 15 Location 3, Quantities for Type C Lock	Date Jun 97
Computed by David R. Wehrley	Checked DRW	Sheet 1 of 6

Crane-In Gate Monolith

Note: For quantities change the values in the Blue cells of the cross section.

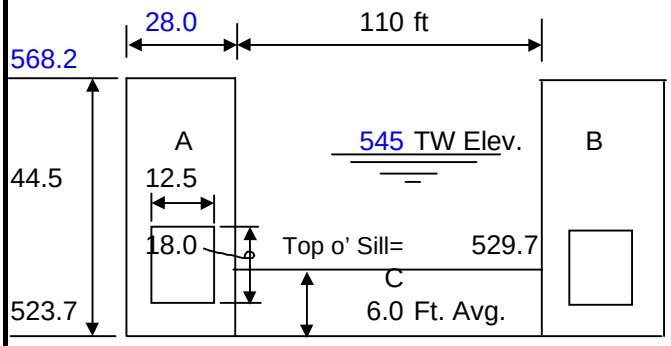

Precast concrete miter gate monolith

A =	8,697	CY
B =	8,697	CY
C =	5,622	CY
Total =	**23,017**	CY

67.6

Monolith Length (into the paper) = 230.0 ft

Typical sheet pile cell for the Riverwall

Cells are 33.8 ft. center-to-center.

Top Area = 616.0 ft^2

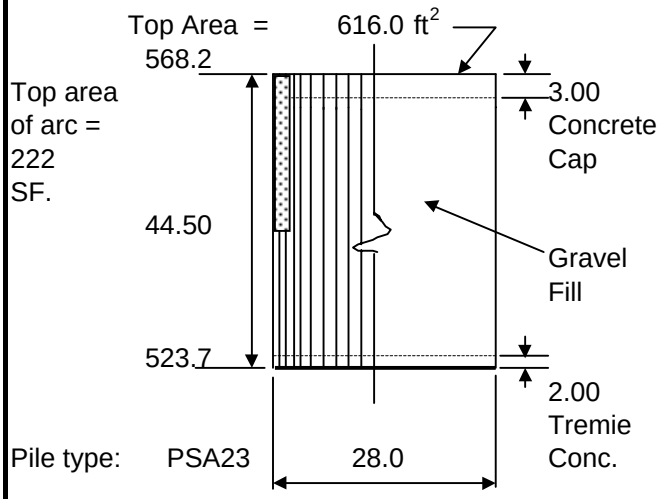

Sheet Piling =	3,914	SF/cell
Sheet Piling =	1,388	SF/arc
Total Sheet Piling =	**135,708**	SF
Cell Fill (gravel) =	**31,374**	CY Total
Precast concrete (panels) =	**2,063**	CY
C.I.P. concrete cap =	**2,383**	CY
Tremie Concrete =	**1589**	CY
Riverwall Length =	865.0	

Typical cell for the Intermediate lockwall

Cells are 31.4 ft. center-to-center.

Top Area = 616.0 ft^2

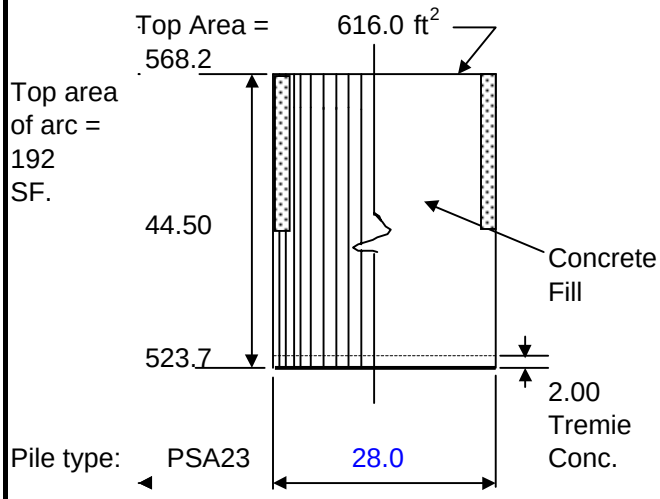

Sheet Piling =	3,914	SF/cell
Sheet Piling =	1,291	SF/arc
Total Sheet Piling =	**93,490**	SF
Cell Fill (concrete) =	**22,845**	CY Total
Precast concrete (panels) =	**2,690**	CY
Tremie Concrete =	**1075**	CY
I-wall Length =	564.0	

Subject		Date
L/D 15 Location 3, Quantities for Type C Lock		Jun 97
Computed by	Checked	Sheet of
David R. Wehrley	DRW	2 6

In ground culvert

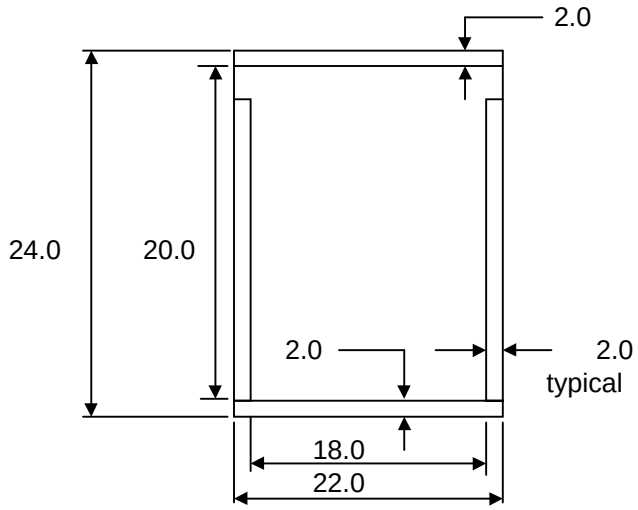

Length =	862.0	ft
Branch length =	267.0	ft
Main culvert concrete =	5,364	CY
Branch culvert concrete =	1,661	CY
Total =	**7,100**	CY

Typical cell of cofferdam

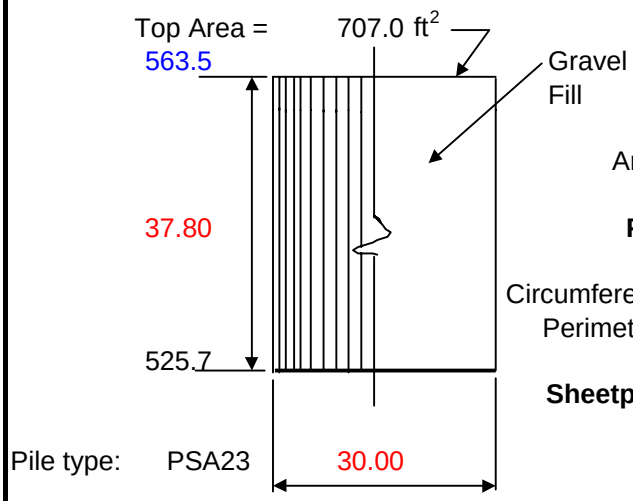

Area of arcs =	845	SF	(Ref. platr3b1.dgn)
Area of 3 cells =	2,121	SF	
Fill Quantity =	**4,152**	CY	
Circumference of 1 cell =	94.2	FT	
Perimeter of all arcs =	106.9	FT	(Ref. platr3b1.dgn)
Sheetpile Quantity =	**14,729**	SF	

Subject		Date
L/D 15 Location 3, Quantities for Type C Lock		Jun 97
Computed by	Checked	Sheet of
David R. Wehrley	DRW	3 6

QUANTITY SUMMARY (Excluding Guardwalls):

A. CAST-IN-PLACE CONCRETE

F/E CULVERT =	7,100	CY
CELL CAPS =	2,383	CY
CONCRETE CELL FILL =	22,845	CY
TOTAL =	**32,328**	CY

B. PRECAST CONCRETE

ITER GATE FLOAT-IN MONO=	23,017	CY
LOCKWALL PANELS =	4,754	CY
TOTAL =	**27,771**	CY

C. TREMIE CONCRETE

LOCKWALLS =	**2664**	CY

D. SHEETPILING

LOCKWALLS (PSA23) =	229,198	SF
OWNSTREAM COFFERDAM =	14,729	SF
TOTAL =	**243,927**	SF

E. GRAVEL FILL

LOCKWALLS =	31,374	CY
COFFERDAM =	4,152	CY
TOTAL =	**35,527**	CY

Subject		Date
L/D 15 Location 3 Quantities for Type B Lock, Guardwalls		2
Computed by Michael Cummings	Checked	Sheet 3 of 5

Upstream Guardwall Cell (typical of 14)

1200' Long Guardwall

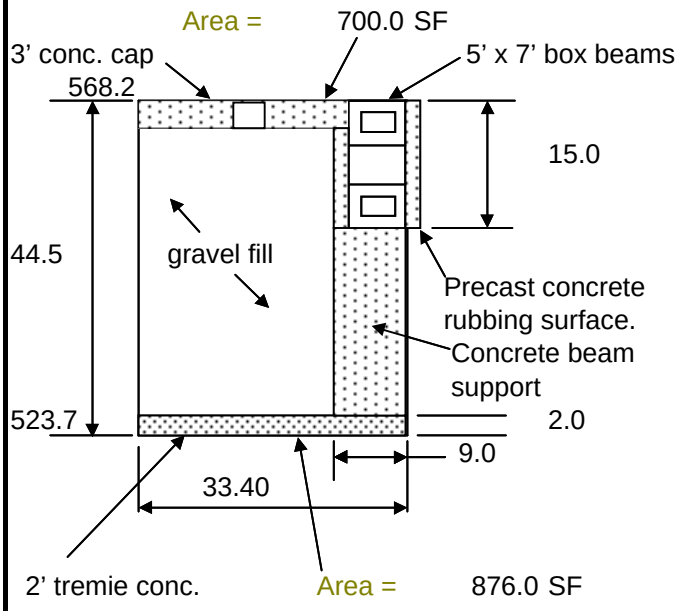

Cast-in-Place Concrete

3' conc. cap	=	78	CY
Beam support	=	220	CY
Total	=	297	CY
For 14 cells	=	4,162	CY
Tremie concrete	=	65	CY
For 14 cells	=	910	CY

Precast Concrete (for entire guardwall length)

5'x7' beam	=	1,741	CY
rubbing pl.	=	979	CY
Total	=	2,720	CY
Gravel fill	=	1,027	CY
For 14 cells	=	14,378	CY
Sheet Piling	=	4,669	SF
For 14 cells	=	65,371	SF

End Cell of Guardwall

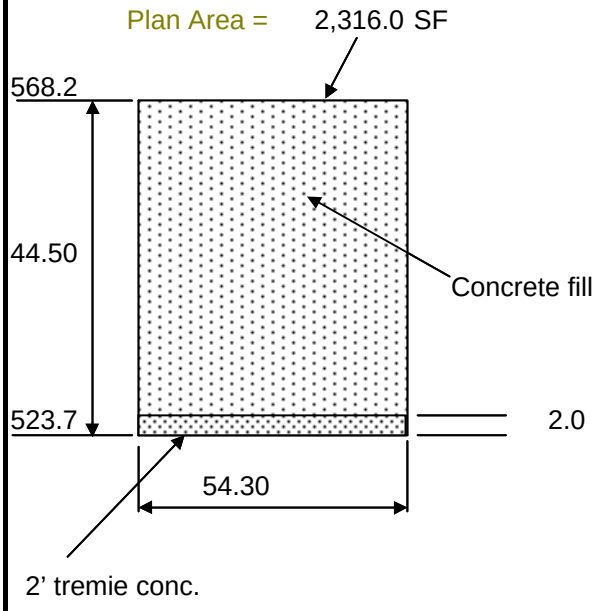

Cast-in-Place Concrete

Volume	=	3,646	CY
Tremie concrete	=	172	CY
Sheet Piling (PS31)	=	7,591	SF

Subject		Date
L/D 15 Location 3 Quantities for Type B Lock, Crane-In Construcion		2
Computed by Michael Cummings	Checked	Sheet 4 of 5

Downstream Guardwall Cell (typical of 14) 817' Long Guardwall

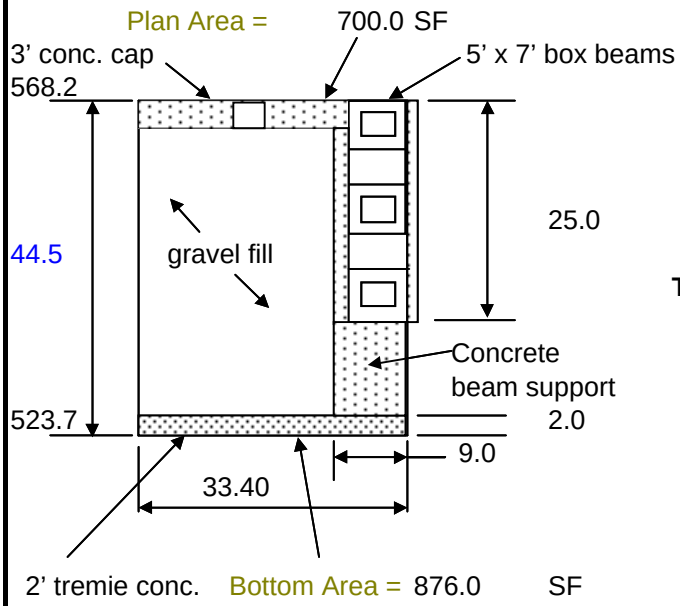

Cast-in-Place Concrete			
3' conc. cap	=	78	CY
Beam support	=	171	CY
Total	=	249	CY
for 10 cells	=	2,490	CY
Tremie concrete	=	65	CY
for 10 cells	=	650	CY
Precast Concrete			
5'x7' beam	=	1,816	CY
rubbing pl.	=	1,135	CY
Total	=	2,950	CY
Gravel fill	=	1,027	CY
for 10 cells	=	10,270	CY
Sheet Piling	=	4,669	SF
for 10 cells	=	46,693	SF

End Cell of Guardwall

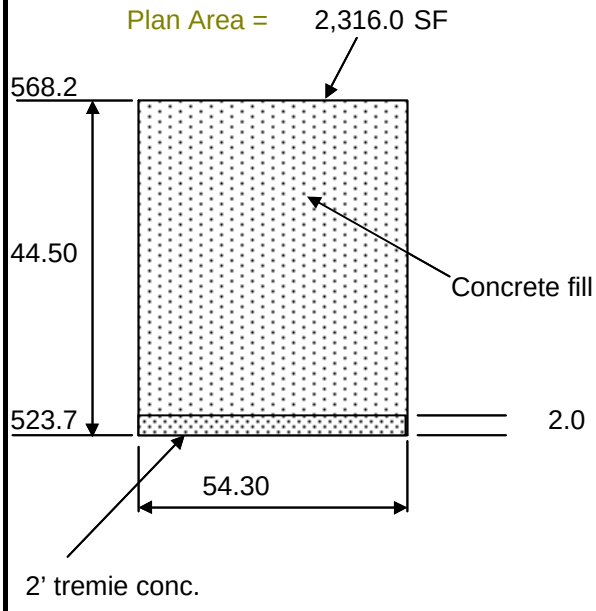

Cast-in-Place Concrete			
Volume	=	3,646	CY
Tremie concrete	=	172	CY
Sheet Piling (PS31)	=	7,591	SF

Subject		Date
L/D 15 Location 3 Quantities for Type B Lock, Crane-In Construcion		2
Computed by	Checked	Sheet of
Michael Cummings		5 5

GUARDWALL QUANTITY WRAP-UP :

A. CAST-IN-PLACE CONCRETE

Upstream =	7,808	CY
Downstream =	6,135	CY
TOTAL=	13,943	CY

B. PRECAST CONCRETE

Upstream Beams =	1,741	CY
ownstream Beams =	1,816	CY
TOTAL=	3,556	CY

Upstream Panels =	979	CY
Downstream Panels =	1,135	CY
TOTAL=	2,114	CY

C. GRAVEL FILL

Upstream =	14,378	CY
Downstream =	10,270	CY
TOTAL=	24,648	CY

D. SHEETPILING

Upstream =	72,962	CY
Downstream =	54,285	CY
TOTAL=	127,247	CY

E. TREMIE CONCRETE

Upstream =	1,082	CY
Downstream =	822	CY
TOTAL=	1,904	CY

LOCK AND DAM NO. 14, LOCATION 2, TYPE B
1200' LOCK ALTERNATIVE (ROCK-FOUNDED)

ACCOUNT CODE	ITEM	QUANTITY	UNIT	UNIT PRICE ($'s)	AMOUNT ($1,000's)
01.	**LANDS AND DAMAGES**				
	REAL ESTATE	1	JOB	SUM	20
04.	**DAMS**				
	04 DAMS SUBTOTAL				0
05.	**LOCKS**				
	SITEWORK				
	MOBILIZATION	1	JOB	SUM	8,000
	DEMOLITION	1	JOB	SUM	1,117
	ROCK EXCAVATION	27,593	CY	45	1,242
	LOCK DEWATERING	1	JOB	SUM	1,250
	COFFERDAM REMOVAL	1	JOB	SUM	81
	MARINE FACILITIES, TEMP MOORING STRUCTURE	1	JOB	SUM	3,900
	CONCRETE				
	CAST IN PLACE REINFORCED CONCRETE	26,496	CY	217	5,750
	PRECAST CONCRETE CHAMBER AND APPROACH WALLS, FLOOR	11,110	CY	400	4,444
	TREMIE CONCRETE	9,898	CY	165	1,633
	PRESTRESSING/POST TENSION STEEL	1,110,000	LB	2.5	2,775
	FURNISH AND SET LANDING PADS	74	EA	19000	1,406
	SET PRECAST WALL UNITS	56	EA	16000	896
	FLOAT IN AND SET MITER GATE SILL	1	EA	140000	140
	STEEL REINFORCEMENT	1,589,800	LB	0.75	1,192
	METALS				
	SHEET PILING	1	JOB	SUM	220
	STRUCTURAL STEEL (GATES, VALVES, TRASHRACKS)	1	JOB	SUM	3,250
	STRUCTURAL STEEL (MISCELLANEOUS - LADDERS, ETC.	1	JOB	SUM	3,040
	ELECTRICAL				
	ELECTRICAL SYSTEM	1	JOB	SUM	4,700
	MECHANICAL				
	GATE AND VALVE OPERATING MACHINERY	1	JOB	SUM	2,750
	MECHANICAL SYSTEMS	1	JOB	SUM	3,200
	MISCELLANEOUS	1	JOB	SUM	1,950
	05 LOCKS SUBTOTAL				52,936
05.60.	**GUIDEWALLS**				
	CONCRETE				
	CAST IN PLACE REINFORCED CONCRETE	7,243	CY	280.00	2,028
	PRECAST CONCRETE BEAMS (PRESTRESSED)	4,665	LF	1,170.00	5,458
	PRECAST CONCRETE (W/REINFORCEMENT)	2,107	CY	400.00	843
	TREMIE CONCRETE (WITH REINFORCEMENT)	1,709	CY	210.00	359
	GRAVEL FILL	22,153	CY	15.00	332
	METALS				
	SHEETPILING FOR CELLS (PS31)	92,893	SF	25.00	2,322
	SHEETPILE CUTOFF WALL (PZ35)	24,247	SF	30.00	727
	SHEETPILE RETAINING WALL (PZ40)	22,995	SF	30.00	690
	STRUCTURAL STEEL	1	JOB	SUM	3,811
	05.60 GUIDEWALLS SUBTOTAL				16,571
09.	**CHANNEL WORK**	1	JOB	SUM	4,187
	PROJECT SUBTOTAL				73,713
	CONTINGENCIES 25%				18,428
	PROJECT SUBTOTAL WITH CONTINGENCIES				92,000
30.	**PLANNING, ENGINEERING, AND DESIGN (10%)**				9,000
31.	**CONSTRUCTION MANAGEMENT (10%)**				9,000
	PROJECT TOTAL				110,000

		QUANTITY CALCULATIONS									
		L/D 14 Location 2, Type B						Sheet 1_ of 4_			
1	Rock excavation										
	under riverward wall:										
	[(28'x7.4')+(2x7.4'x1'x0.5)+(2x5'x3')+(2x3'x3'x0.5)] x 604'						=	146,409.60	CF	5,422.58	CY
	under landward wall:										
	[(28'x7.4')+(2x7.4'x1'x0.5)+(2x5'x3')+(2x3'x3'x0.5)] x 604'						=	146,409.60	CF	5,422.58	CY
	gate bay monolith										
	70' x 14.9' x 166'						=	173,138.00	CF	6,412.52	CY
	lock chamber	4.2	x	110	x	604	=	279,048.00	CF	10,335.11	CY
										27,592.79	CY
2	Anchor bars (#8 x 14.5')										
	riverward wall										
	(2.67 lbs x 14.5' x 6 ea) x 30 locations = 6,968 LB							6,968.00	LB		
	landward wall										
	(2.67 lbs x 14.5' x 6 ea) x 30 locations = 6,968 LB							6,968.00	LB		
3	Steel footing box (1/2" steel plate)									13,936.00	LB
	riverward wall										
	20.42 lb x [(6'x3'x2)+(4'x3'x2)] = 1,225 LB @ 30 locations							36,750.00	LB		
	landward wall										
	20.42 lb x [(6'x3'x2)+(4'x3'x2)] = 1,225 LB @ 30 locations							36,750.00	LB		
4	Concrete									73,500.00	LB
	riverward wall										
	-bottom lift (tremie)										
	Rock excav. - precast lockwall unit = 5,422.6 CY - 474 CY =									4,948.60	CY
	-2nd lift (reinforced)										
	outside wall, lower section	11.5	x	6.67	x	674	=	51,699.17	CF		
	inside wall, lower section	11.5	x	6.67	x	674	=	51,699.17	CF		
	outside wall, upper section	4.0	x	3.67	x	674	=	9,894.32	CF		
	inside wall, upper section	4.0	x	3.67	x	674	=	9,894.32	CF		
	-3rd lift (reinforced									4,562.48	CY
	lower section	6.50	x	24	x	674	=	105,144.00	CF		
	upper section	3	x	25.67	x	674	=	51,904.74	CF		
	-4th lift (reinforced)									5,816.62	CY
	outside wall	7	x	5	x	674	=	23,590.00	CF		
	inside wall	7	x	5	x	674	=	23,590.00	CF		
										1,747.41	CY
	landward wall										
	-bottom lift (tremie)										
	Rock excav. - precast lockwall unit = 5,422.6 CY - 474 CY =									4,948.60	CY
	-2nd lift (reinforced)										
	outside wall, lower section	11.5	x	6.67	x	674	=	51,699.17	CF		
	inside wall, lower section	11.5	x	6.67	x	674	=	51,699.17	CF		
	outside wall, upper section	4.0	x	3.67	x	674	=	9,894.32	CF		
	inside wall, upper section	4.0	x	3.67	x	674	=	9,894.32	CF		
	-3rd lift (reinforced									4,562.48	CY
	lower section	6.50	x	24	x	674	=	105,144.00	CF		
	upper section	6.50	x	25.67	x	674	=	112,460.27	CF		
										8,059.42	CY
	-4th lift (reinforced)										
	outside wall	7	x	5	x	674	=	23,590.00	CF		
	inside wall	7	x	5	x	674	=	23,590.00	CF		
										1,747.41	CY
	Total Concrete									36,393.01	CY

LOCK AND DAM NO. 14, LOCATION 2, TYPE C
(ROCK-FOUNDED)

CCOUNT CODE	ITEM	QUANTITY	UNIT	UNIT PRICE ($'s)	AMOUNT ($1,000's)
01.	LANDS AND DAMAGES				
	REAL ESTATE	1	JOB	SUM	20
04.	DAMS				
	04 DAMS SUBTOTAL				0
05.	LOCKS				
	SITEWORK				
	MOBILIZATION	1	JOB	SUM	8,000
	DEMOLITION	1	JOB	SUM	1,117
	ROCK EXCAVATION	22,231	CY	45	1,000
	LOCK DEWATERING	1	JOB	SUM	1,250
	COFFERDAM REMOVAL	1	JOB	SUM	81
	MARINE FACILITIES, TEMP MOORING STRUCTURE	1	JOB	SUM	3,900
	CONCRETE				
	CAST IN PLACE REINFORCED CONCRETE	25,525	CY	217	5,539
	PRECAST CONCRETE CHAMBER AND APPROACH WALL	2,400	CY	400	960
	TREMIE CONCRETE	9,808	CY	165	1,618
	PRESTRESSING STEEL	240,000	LB	2.5	600
	FURNISH AND SET LANDING PADS	18	EA	19000	342
	SET CULVERT UNITS	88	EA	16000	1,408
	FLOAT IN AND SET MITER GATE SILL	1	EA	140000	140
	STEEL REINFORCEMENT	1,531,500	LB	0.75	1,149
	TIMBER				
	12"X12" TIMBER FENDERS	13,480	LF	25	337
	METALS				
	SHEET PILING AND BRACING	1	JOB	SUM	2,900
	STRUCTURAL STEEL (GATES, VALVES, TRASHRACKS)	1	JOB	SUM	3,250
	STRUCTURAL STEEL (MISCELLANEOUS - LADDERS, ETC.)	1	JOB	SUM	3,040
	ELECTRICAL				
	ELECTRICAL SYSTEM	1	JOB	SUM	4,700
	MECHANICAL				
	GATE AND VALVE OPERATING MACHINERY	1	JOB	SUM	2,750
	MECHANICAL SYSTEMS	1	JOB	SUM	3,200
	MISCELLANEOUS	1	JOB	SUM	1,950
	05 LOCKS SUBTOTAL				49,231
05.60.	GUIDEWALLS				
	CONCRETE				
	CAST IN PLACE REINFORCED CONCRETE	7,042	CY	280.00	1,972
	PRECAST CONCRETE BEAMS (PRESTRESSED)	4,680	LF	1,170.00	5,476
	PRECAST CONCRETE (W/REINFORCEMENT)	2,114	CY	400.00	846
	TREMIE CONCRETE (WITH REINFORCEMENT)	1,709	CY	210.00	359
	GRAVEL FILL	21,450	CY	15.00	322
	METALS				
	SHEETPILING FOR CELLS (PS31)	90,348	SF	25.00	2,259
	SHEETPILING FOR CUTOFF WALL (PZ35)	24,069	SF	30.00	722
	SHEETPILE CUTOFF WALL (PZ40)	22,365	SF	30.00	671
	STRUCTURAL STEEL	1	JOB	SUM	3,811
	05.60 GUIDEWALLS SUBTOTAL				16,436
09.	CHANNEL WORK	1	JOB	SUM	4,187
	PROJECT SUBTOTAL				69,875
	CONTINGENCIES 25%				17,469
	PROJECT SUBTOTAL WITH CONTINGENCIES				87,000
30.	PLANNING, ENGINEERING, AND DESIGN (10%)				9,000
31.	CONSTRUCTION MANAGEMENT (10%)				9,000
	PROJECT TOTAL				$ 105,000

		QUANTITY CALCULATIONS									
		L/D 14 Location 2, Type C						Sheet 1_ of 3_			
1	Rock excavation										
	under riverward wall:										
	[(28'x4')+(2x8'x2'x0.5)+(2x1'x8')+(2x2'x4')+(2x4'x1'x0.5)] x 674'						=	110,536.00	CF	4,093.93	CY
	under landward wall:										
	[(28'x4')+(2x8'x2'x0.5)+(2x1'x8')+(2x2'x4')+(2x4'x1'x0.5)] x 674'						=	110,536.00	CF	4,093.93	CY
	gate bay monolith										
	70' x 13' x 110' = 100,100 CF						=	100,100.00	CF	3,707.41	CY
	lock chamber	4.2	x	110	x	604	=	279,048.00	CF	10,335.11	CY
										22,230.37	CY
2	Concrete										
	riverward wall										
	-bottom lift (tremie)										
	Rock excav. - sheet pile wall = 4,904 CY - 0 CY =									4,904.00	CY
	-2nd lift (reinforced)										
	outside wall	15.0	x	6	x	674	=	60,660.00	CF		
	inside wall	15.0	x	5	x	674	=	50,550.00	CF		
	-3rd lift (reinforced)									4,118.89	CY
	elev.T - elev. A	9.50	x	26	x	674	=	166,478.00	CF		
	-4th lift (reinforced)									6,165.85	CY
	outside wall	7	x	9	x	674	=	42,462.00	CF		
	inside wall	7	x	8	x	674	=	37,744.00	CF		
	landward wall									2,970.59	CY
	-bottom lift (tremie)										
	Rock excav. - sheet pile wall = 4,904 CY - 0 CY =									4,904.00	CY
	-2nd lift (reinforced)										
	outside wall	15.0	x	6	x	674	=	60,660.00	CF		
	inside wall	15.0	x	5	x	674	=	50,550.00	CF		
	-3rd lift (reinforced									4,118.89	CY
	elev.T - elev. A	9.50	x	27	x	674	=	172,881.00	CF		
	-4th lift (reinforced)									6,403.00	CY
	outside wall	7	x	5	x	674	=	23,590.00	CF		
	inside wall	7	x	5	x	674	=	23,590.00	CF		
										1,747.41	CY
	Total Concrete									35,332.63	CY
3	Steel tie rods @ 11' centers	61	x	2	=	122	EA				
4	Steel sheet pile wall, PZ27										
	riverward wall	39.5	x	2	x	674	=	53,246.00	SF		
	landward wall	39.5	x	2	x	674	=	53,246.00	SF		
										106,492.00	SF
5	Timber waler	10	x	2	x	674	=	13,480.00	LF		
6	Precast culvert liner										
	riverward wall	40.5	x	637	x	0.75	=	19,348.88	CF		
	landward wall	40.5	x	637	x	0.75	=	19,348.88	CF		
								38,697.75	CF		
										1,433.25	CY

LOCK AND DAM NO.14, LOCATION NO.4, TYPE A,
1200' LOCK ALTERNATIVE (ROCK FOUNDED)

ACCOUNT CODE	ITEM	QUANTITY	UNIT	UNIT PRICE ($'s)	AMOUNT ($1,000's)
01.	**LANDS AND DAMAGES**				
	REAL ESTATE	1	JOB	SUM	350
04.	**DAMS**				
	REMOVAL OF EXISTING STRUCTURES	1	JOB	SUM	150
	04 DAMS SUBTOTAL				150
05.	**LOCKS**				
	SITEWORK				
	MOBILIZATION	1	JOB	SUM	10,650
	DEMOLITION	1	JOB	SUM	1,910
	EXCAVATION	48,960	CY	6.25	306
	FOUNDATION FILL AT SCOUR HOLE	0	CY	18.75	0
	LOCK WALL FILL AND COFFERDAM FILL	236,600	CY	10.00	2,366
	CAPSTONE	52,660	TN	25.00	1,317
	RIPRAP	33,380	TN	20.00	668
	LEVELING STONE IN LOCK FLOOR	4,580	TN	15.00	69
	GRAVEL FILTER IN LOCK FLOOR	16,606	TN	15.00	249
	GEOTEXTILE	13,740	SY	6.00	82
	FOUNDATION/LOCK DEWATERING	1	JOB	SUM	3,000
	MARINE FACILITIES, TEMP. MOORING STR.	1	JOB	SUM	3,900
	CONCRETE				
	STRUCTURAL GROUTING	450	CY	200	90
	CAST IN PLACE REINFORCED CONCRETE	85,300	CY	217	18,510
	CAST IN PLACE CONNECTIONS	964	CY	725	699
	PRECAST CONCRETE	0	CY	400	0
	TREMIE CONCRETE, BASE .	10,340	CY	165	1,706
	PRECAST FLOOR PAVERS AND STRUTS	15,450	CY	286	4,419
	SET PRECAST FLOOR BEAMS	31	EA	16000	496
	SET FLOOR PANELS	62	EA	10000	620
	STEEL REINFORCEMENT	7,614,000	LB	0.75	5,711
	METALS				
	SHEET PILING	461,200	SF	35.80	16,511
	SHEET PILE BRACING	1	JOB	SUM	350
	FOUNDATION PILING AND TESTING	209,190	LF	39.75	8,315
	STRUCTURAL STEEL (GATES, VALVES, ETC.)	1	JOB	SUM	11,613
	STRUCT. STEEL (MISCELLANEOUS - LADDERS, ETC.)	1	JOB	SUM	3,040
	ELECTRICAL				
	ELECTRICAL SYSTEM		JOB	SUM	4,700
	INSTRUMENTATION	1	JOB	SUM	1,250
	MECHANICAL				
	GATE AND VALVE OPERATING MACHINERY	1	JOB	SUM	2,750
	MECHANICAL SYSTEMS	1	JOB	SUM	3,200
	MISCELLANEOUS	1	JOB	SUM	1,950
	05 LOCKS SUBTOTAL				110,446

LOCK AND DAM NO.14, LOCATION NO.4, TYPE A,
1200' LOCK ALTERNATIVE (ROCK FOUNDED)

05.60.	**GUIDEWALLS**				
	SITEWORK				
	EXCAVATION	118,490	CY	4.5	533
	BACKFILL	73,640	CY	10	736
	SCOUR PROTECTION	46,350	TON	15	695
	CONCRETE				
	42" DIAMETER PILES	6,360	LF	400	2,544
	CAST IN PLACE REINFORCED CONCRETE	4,263	CY	150	640
	PRECAST BEAMS	17,325	CY	500	8,663
	PRECAST BEAM SEATS	262	CY	1000	262
	TREMIE CONCRETE	1,709	CY	500	855
	PERMANENT CELL FILL (C0NCRETE)	3,869	CY	200	774
	GROUT FOR BEAMS	778	CY	1000	778
	STEEL REINFORCEMENT	2,921,700	LB	0.75	2,191
	GRAVEL FILL	13,432	CY	10	134
	METALS				
	SHEET PILING	75,323	SF	25.00	1,883
	FOUNDATION PILING	1	JOB	SUM	318
	POST TENSIONING	2,030	LF	30	61
	STRUCTURAL STEEL	1	JOB	SUM	4,060
	05.60 GUIDEWALLS SUBTOTAL				25,127
09.	**CHANNEL WORK**	1	JOB	SUM	6,520
	PROJECT SUBTOTAL				142,593
	CONTINGENCIES 25%				35,648
	PROJECT SUBTOTAL WITH CONTINGENCIES				178,241
30.	**PLANNING, ENGINEERING, AND DESIGN (10%)**				18,000
31.	**CONSTRUCTION MANAGEMENT (10%)**				18,000
	PROJECT TOTAL				$ 214,000

LOCK AND DAM NO.14, LOCATION 4, TYPE A
1200' LOCK ALTERNATIVE (ROCK FOUNDED)

Subject	ROCK FOUNDED LOCKS: L/D 14 Location 4 Quantities for Type A Lock, Crane-In Construction	Date Sep 96
Computed by Michael Cummings	Checked	Sheet 1 of 6

Gate Monolith

Note: For quantities change the RED values in the cells of the dimensioned cross section shown.

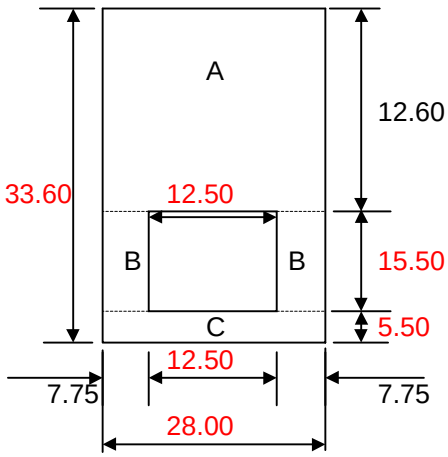

Cast in place concrete

A_g =	352.8	ft^2	
B_g =	240.3	ft^2	
C_g =	154.0	ft^2	
D_g =	193.8	ft^2	CULVERT
Total =	747.1	ft^2	

hght chk = 33.60 left
hght chk = 33.60 right

US lngth = 265.0 ft DS lngth = 240.0 ft

Lock Wall
typical

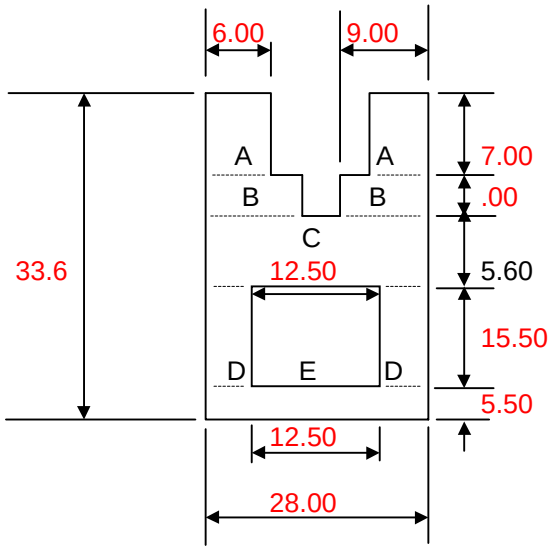

Cast in place concrete

A_w =	84.00	ft^2	
B_w =	.00	ft^2	
C_w =	156.80	ft^2	
D_w =	240.25	ft^2	
E_w =	193.75	ft^2	CULVERT
F_w =	154.00	ft^2	
Total =	635.05	ft^2	

hght chk = 33.60 left
hght chk = 33.60 right

RS Wall = 1,050.0 ft LS Wall = 1,050.0 ft

LOCK AND DAM NO.14, LOCATION 4, TYPE A
1200' LOCK ALTERNATIVE (ROCK FOUNDED)

Subject		Date
L/D 14 Location 4 Quantities for Type A Lock, Crane-In Construction		Sep 96
Computed by Michael Cummings	Checked	Sheet 2 of 6

Typical cell for cofferdam

Area = 1,736.0 ft^2

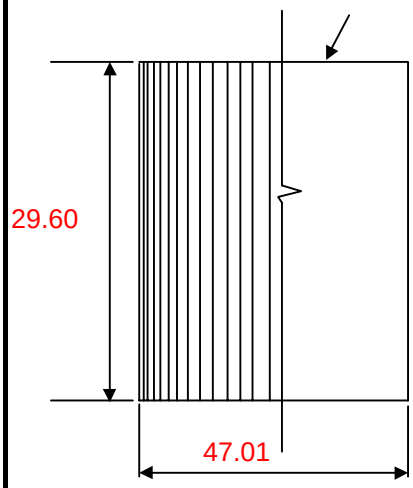

Pile type: PS31
Choose PSA23, PS27.5, or PS31

Area between cells:

Area =	773.0	ft^2
Distance =	15.28	ft
Length =	1.64	ft
Number in cell =	90	piles
No. in space =	20	piles
US Length =	2,650.0	ft
DS Length =	2,650.0	ft

LOCK CHAMBER WALLS:

A. WALL MONOLITHS

1. River side walls

(a) Cast in place concrete

Volume = 24,696.4 CY

(b) Precast concrete

Volume = .0 CY

1. Land side walls

(a) Cast in place concrete

Volume = 24,696.4 CY

(b) Precast concrete

Volume = .0 CY

B. GATE MONOLITHS

1. Upstream cast in place concrete

Volume = 14,664.3 CY

2. Upstream precast concrete

Volume = .0 CY

1. Downstream cast in place concrete

Volume = 13,280.9 CY

2. Downstream precast concrete

Volume = .0 CY

LOCK AND DAM NO.14, LOCATION 4, TYPE A
1200' LOCK ALTERNATIVE (ROCK FOUNDED)

Subject		Date
L/D 14 Location 4 Quantities for Type A Lock, Crane-In Construcion		Sep 96
Computed by Michael Cummings	Checked	Sheet 3 of 6

COFFERDAMS:

1. Cofferdam #1, Upstream

Number = 43.0 cells

Total = 9,460.0 piles

2. Cofferdam #2, Upstream

Number = 43.0 cells

Total = 236,552.0 CY fill volume

SILLS:

Length = 120.0 ft
Width = 111.0 ft
Height = 8.0 ft

Volume = 7,893.3 CY

SUMMARY:

CONCRETE (Cast in place)

A.	Lockwalls =	49,392.8 CY
B.	Gate monoliths =	27,945.2 CY
C.	Sills =	7,893.3 CY
	Total =	85,300.0 CY

PRECAST CONCRETE

A.	Lockwalls =	.0 CY
B.	Gate monoliths =	.0 CY
	Total =	.0 CY

SHEETPILES

A.	Required number for cofferdams =	9,460.0 piles
B.	Required number for walls =	0 piles
	Total =	9,500.0 piles
	Total =	461,200.0 SF of piling

FILL

A.	Required fill for cofferdams =	236,552.0 CY
	Total =	236,600.0 CY

LOCK AND DAM NO.14, LOCATION 4, TYPE A
1200' LOCK ALTERNATIVE (ROCK FOUNDED)

Subject		Date
L/D 14 Location 3 Quantities for Type B Lock, Crane-In Construcion		Sep 96
Computed by Michael Cummings	Checked	Sheet 4 of 6

Upstream Guidewall Cell, Small

(typical)

Area = 700.0 SF

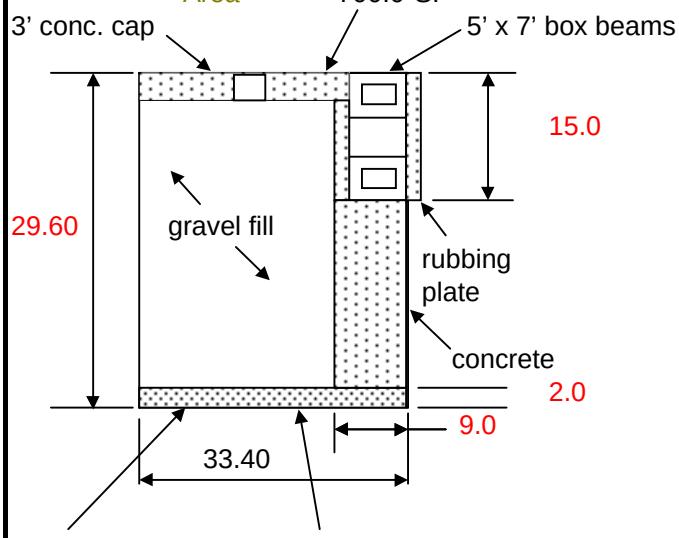

Area = 876.0 SF

Note: For quantities change the RED values in the cells of the dimensioned cross section shown.

Cast-in-Place Concrete			
3' conc. cap	=	77	CY
concrete	=	115	CY
Total	=	192	CY
for 7 cells	=	1,341	CY
Tremie concrete	=	65	CY
for 7 cells	=	455	CY
Precast Concrete			
5'x7' beam	=	889	CY
rubbing pl.	=	500	CY
Total	=	1,389	CY
Gravel fill	=	640	CY
for 7 cells	=	4,477	CY
Sheet Piling	=	3,106	SF
for 7 cells	=	21,741	SF

Upstream Guidewall Cell, Large

(typical)

Area = 2,124.0 SF

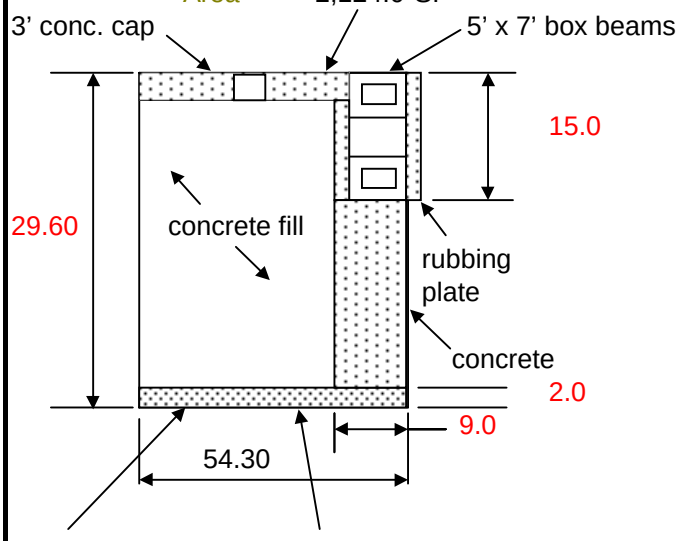

Area = 2,316.0 SF

Note: For quantities change the RED values in the cells of the dimensioned cross section shown.

Cast-in-Place Concrete			
3' conc. cap	=	235	CY
concrete	=	143	CY
Total	=	378	CY
Tremie concrete	=	172	CY
Permanent Cell Fill		1,934	CY
Sheet Piling	=	5,049	SF

LOCK AND DAM NO.14, LOCATION 4, TYPE A
1200' LOCK ALTERNATIVE (ROCK FOUNDED)

Subject		Date
L/D 14 Location 3 Quantities for Type B Lock, Crane-In Construcion		Sep 96
Computed by Michael Cummings	Checked	Sheet 5 of 6

Downstream Guidewall Cell, Small

(typical)

Area = 700.0 SF

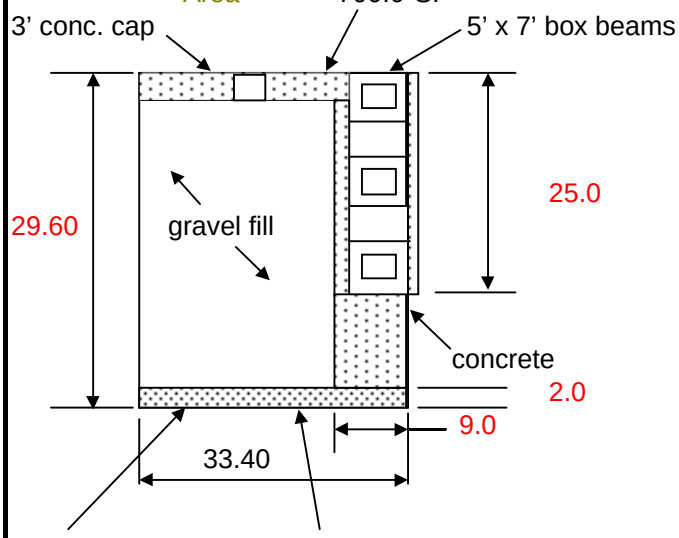

Area = 876.0 SF

Note: For quantities change the RED values in the cells of the dimensioned cross section shown.

Cast-in-Place Concrete			
3' conc. cap	=	77	CY
concrete	=	67	CY
Total	=	143	CY
for 14 cells	=	2,005	CY
Tremie concrete	=	65	CY
for 14 cells	=	910	CY
Precast Concrete			
5'x7' beam	=	2,667	CY
rubbing pl.	=	1,667	CY
Total	=	4,333	CY
Gravel fill	=	640	CY
for 14 cells	=	8,954	CY
Sheet Piling	=	3,106	SF
for 14 cells	=	43,483	SF

Downstream Guidewall Cell, Large

(typical)

Area = 2,124.0 SF

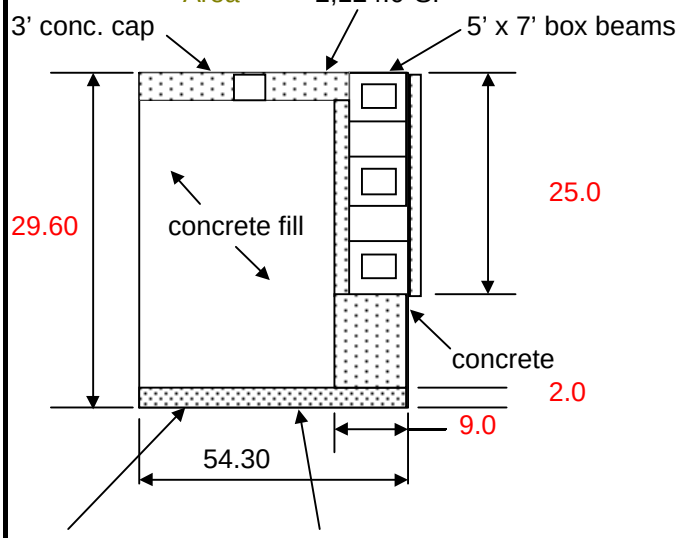

Area = 2,316.0 SF

Note: For quantities change the RED values in the cells of the dimensioned cross section shown.

Cast-in-Place Concrete			
3' conc. cap	=	235	CY
concrete	=	304	CY
Total	=	539	CY
Tremie concrete	=	172	CY
Permanent Cell Fill		1,934	CY
Sheet Piling	=	5,049	SF

LOCK AND DAM NO.14, LOCATION 4, TYPE A
1200' LOCK ALTERNATIVE (ROCK FOUNDED)

Subject		Date
L/D 14 Location 3 Quantities for Type B Lock, Crane-In Construcion		Sep 96
Computed by Michael Cummings	Checked	Sheet 6 of 6

LOCK GUIDEWALLS :

A. UPSTREAM GUIDEWALL

1. Cast-in-place concrete

Volume = 1,719 CY

2. Precast concrete

Volume = 1,389 CY

3. Gravel Fill

Volume = 4,477 CY

4. Sheet Piling

Area = 26,791 SF

5. Permanent Cell Fill

Volume = 1,934 CY

6. Tremie Concrete

Volume = 627 CY

B. DOWNSTREAM GUIDEWALL

1. Cast-in-place concrete

Volume = 2,544 CY

2. Precast concrete

Volume = 4,333 CY

3. Gravel Fill

Volume = 8,954 CY

4. Sheet Piling

Area = 48,532 SF

5. Permanent Cell Fill

Volume = 1,934 CY

6. Tremie Concrete

Volume = 1,082 CY

Guidewall Summary

Total Cast-in-Place Concrete	4,263	CY
Total Precast Concrete	5,722	CY
Total Gravel Fill	13,432	CY
Total Sheet Piling	75,323	SF
Total Permanent Cell Fill	3,869	CY
Total Tremie Concrete	1,709	CY

LOCK AND DAM NO.14, LOCATION 4, TYPE B
1200' LOCK ALTERNATIVE (ROCK FOUNDED)

ACCOUNT CODE	ITEM	QUANTITY	UNIT	UNIT PRICE ($'s)	AMOUNT ($1,000's)
01.	**LANDS AND DAMAGES**				
	REAL ESTATE	1	JOB	SUM	350
04.	**DAMS**				
	DEMOLITION (TAINTER GATE BAY NO.1)	1	JOB	SUM	1,504
	CONCRETE (TIE-IN TO EXISTING LOCK)	362	CY	280.00	101
	MISCELLANEOUS	1	JOB	SUM	150
	REPLACEMENT TAINTER GATE	1	JOB	SUM	10,200
	04 DAMS SUBTOTAL				11,955
05.	**LOCKS**				
	SITEWORK				
	MOBILIZATION	1	JOB	SUM	8,000
	DEMOLITION (AUXILIARY LOCK AREA)	1	JOB	SUM	5,700
	DREDGING	86,500	CY	4.50	389
	ROCK EXCAVATION	50,000	CY	45	2,250
	EXTENSION OF EXISTING UPSTREAM GUIDEWALL	1	JOB	SUM	7,700
	COFFERDAM FILL	167,280	CY	14.50	2,426
	COFFERDAM DEWATERING	1	JOB	SUM	8,000
	CONCRETE				
	CAST IN PLACE REINFORCED CONCRETE	75,700	CY	280	21,196
	GRAVEL FILL	9,700	CY	15.00	146
	METALS				
	SHEET PILING (CLOSURE, PS31)	24,300	SF	25.00	608
	STRUCTURAL STEEL (GATES, VALVES, TRASHRACKS)	1	JOB	SUM	3,250
	STRUCTURAL STEEL (MISCELLANEOUS - LADDERS, ETC.)	1	JOB	SUM	2,500
	ELECTRICAL				
	ELECTRICAL SYSTEM	1	JOB	SUM	4,700
	MECHANICAL				
	GATE AND VALVE OPERATING MACHINERY	1	JOB	SUM	2,750
	MECHANICAL SYSTEMS	1	JOB	SUM	3,200
	MISCELLANEOUS	1	JOB	SUM	9,022
	05 LOCKS SUBTOTAL				81,836
05.60.	**GUIDEWALLS**				
	CONCRETE				
	CAST IN PLACE REINFORCED CONCRETE	4,263	CY	280.00	1,194
	PRECAST CONCRETE BEAMS (W/REINFORCEMENT)	8,960	LF	1,170.00	10,483
	TREMIE CONCRETE	1,709	CY	210.00	359
	METALS				
	SHEETPILING FOR CELLS (PS31)	75,323	SF	25.00	1,883
	STRUCTURAL STEEL	1	JOB	SUM	900
	05.60 GUIDEWALLS SUBTOTAL				14,819
09.	**CHANNEL WORK**	1	JOB	SUM	6,520
	PROJECT SUBTOTAL				115,480
	CONTINGENCIES 25%				28,870
	PROJECT SUBTOTAL WITH CONTINGENCIES				144,000
30.	**PLANNING, ENGINEERING, AND DESIGN (10%)**				14,000
31.	**CONSTRUCTION MANAGEMENT (10%)**				14,000
	PROJECT TOTAL				172,000

LOCK AND DAM NO.14, LOCATION 4, TYPE B
1200' LOCK ALTERNATIVE (ROCK FOUNDED)

Subject	ROCK FOUNDED LOCKS: L/D 14 Location 4 Quantities for Type B Lock, Crane-In Construction	Date Sep 96
Computed by Michael Cummings	Checked	Sheet 1 of 7

Crane - In Gate Monolith

Note: For quantities change the Red values in the cells of the dimensioned cross section shown.

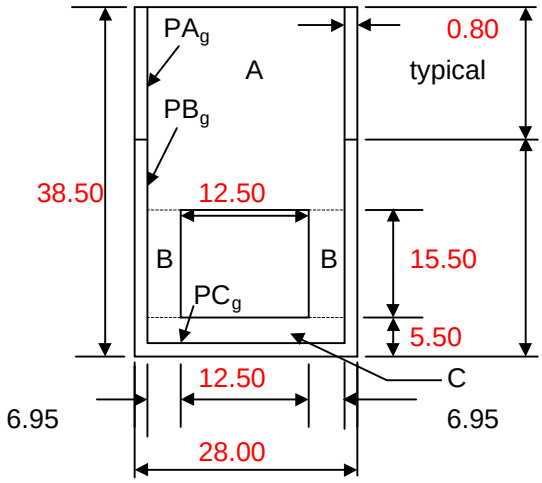

Cast in place concrete

A_g =	462.0	ft^2	
B_g =	215.5	ft^2	
C_g =	124.1	ft^2	
D_g =	193.8	ft^2	CULVERT
Total =	801.5	ft^2	

Pre-cast concrete

PA_g =	19.2	ft^2
PB_g =	42.4	ft^2
PC_g =	21.1	ft^2
Total =	82.7	ft^2

hght chk = 38.50 left
hght chk = 38.50 right

DS lngth = 250.0 ft

Crane - in Lock Wall

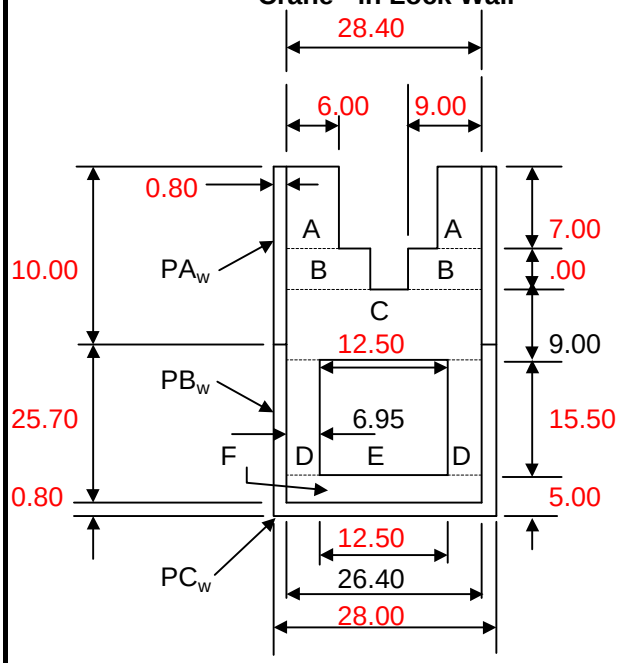

Cast in place concrete

A_w =	84.00	ft^2	
B_w =	.00	ft^2	
C_w =	255.60	ft^2	
D_w =	215.45	ft^2	
E_w =	193.75	ft^2	CULVERT
F_w =	110.88	ft^2	
Total =	665.93	ft^2	

Pre-cast concrete

PA_w =	16.0	ft^2
PB_w =	42.4	ft^2
PC_w =	21.1	ft^2
Total =	79.5	ft^2

hght chk = 36.50 left
hght chk = 36.50 right

RS Wall = 975.0 ft LS Wall = 465.0 ft

L144br

LOCK AND DAM NO.14, LOCATION 4, TYPE B
1200' LOCK ALTERNATIVE (ROCK FOUNDED)

Subject		Date
L/D 14 Location 4 Quantities for Type B Lock, Crane-In Construction		Sep 96
Computed by Michael Cummings	Checked	Sheet 2 of 7

Typical cell for cofferdam

Area = 1,512.0 ft^2

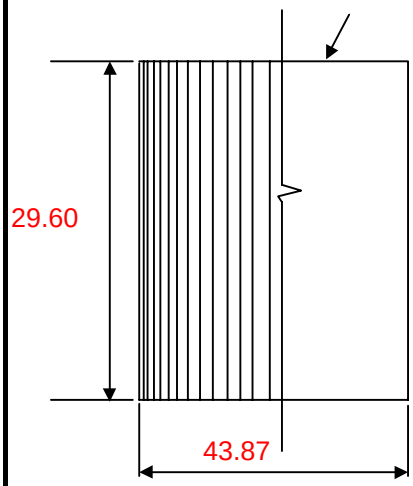

Pile type: PS31
Choose PSA23, PS27.5 or PS31

Area between cells:

Area =	694.0	ft^2
Distance =	14.66	ft
Length =	1.64	ft
Number in cell =	84	piles
No. in space =	19	piles
US Length =	110.0	ft
DS Length =	110.0	ft

Cast In Place Gate Monolith

Note: For quantities change the RED values in the cells of the dimensioned cross section shown.

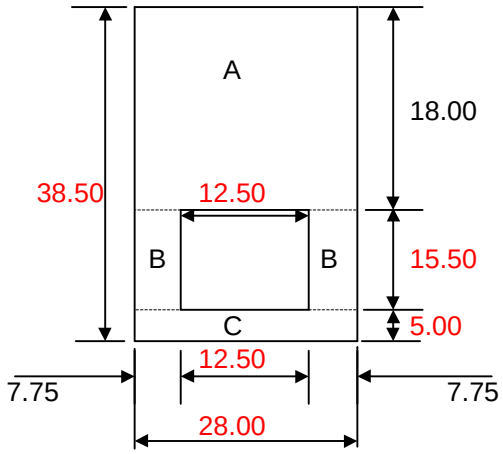

Cast in place concrete

A_g =	504.0	ft^2	
B_g =	240.3	ft^2	
C_g =	140.0	ft^2	
D_g =	193.8	ft^2	CULVERT
Total =	884.3	ft^2	

US lngth = 265.0 ft

hght chk =	38.50	left
hght chk =	38.50	right

L144br

LOCK AND DAM NO.14, LOCATION 4, TYPE B
1200' LOCK ALTERNATIVE (ROCK FOUNDED)

Subject		Date
L/D 14 Location 4 Quantities for Type B Lock, Crane-In Construction		Sep 96
Computed by Michael Cummings	Checked	Sheet 3 of 7

LOCK CHAMBER WALLS:

A. WALL MONOLITHS

1. River side walls

(a) Cast in place concrete

Volume = 24,047.5 CY

(b) Precast concrete

Volume = 2,871.6 CY

1. Land side walls

(a) Cast in place concrete

Volume = 11,468.8 CY

(b) Precast concrete

Volume = 1,369.5 CY

B. GATE MONOLITHS

1. Upstream cast in place concrete

Volume = 17,357.5 CY

2. Upstream precast concrete

Volume = .0 CY

1. Downstream cast in place concrete

Volume = 14,843.1 CY

2. Downstream precast concrete

Volume = 1,531.9 CY

COFFERDAMS:

1. Cofferdam #1, Upstream

Number = 2.0 cells

Total = 412.0 piles

2. Cofferdam #2, Upstream

Number = 2.0 cells

Total = 9,674.0 CY fill volume

SILLS:

Length = 120.0 ft
Width = 111.0 ft
Height = 8.0 ft

Volume = 7,893.3 CY

LOCK AND DAM NO.14, LOCATION 4, TYPE B
1200' LOCK ALTERNATIVE (ROCK FOUNDED)

Subject		Date
L/D 14 Location 4 Quantities for Type B Lock, Crane-In Construcion		Sep 96
Computed by	Checked	Sheet of
Michael Cummings		4 7

SUMMERY:

CONCRETE (Cast in place)

A.	Lockwalls =	35,516.3	CY
B.	Gate monoliths =	32,200.6	CY
C.	Sills =	7,893.3	CY
	Total =	75,700.0	CY

PRECAST CONCRETE

A.	Lockwalls =	4,241.1	CY
B.	Gate monoliths =	1,531.9	CY
	Total =	5,800.0	CY

SHEETPILES

A.	Required number for cofferdams =	412.0	piles
B.	Required number for walls =	0	piles
	Total =	500.0	CY
	Total =	24,300.0	SF of piling

FILL

A.	Required fill for cofferdams =	9,674.0	CY
	Total =	9,700.0	CY

LOCK AND DAM NO.14, LOCATION 4, TYPE B
1200' LOCK ALTERNATIVE (ROCK FOUNDED)

Subject		Date
L/D 14 Location 4 Quantities for Type B Lock, Crane-In Construcion		Sep 96
Computed by Michael Cummings	Checked	Sheet 5 of 7

Upstream Guidewall Cell, Small
(typical)
Area = 700.0 SF

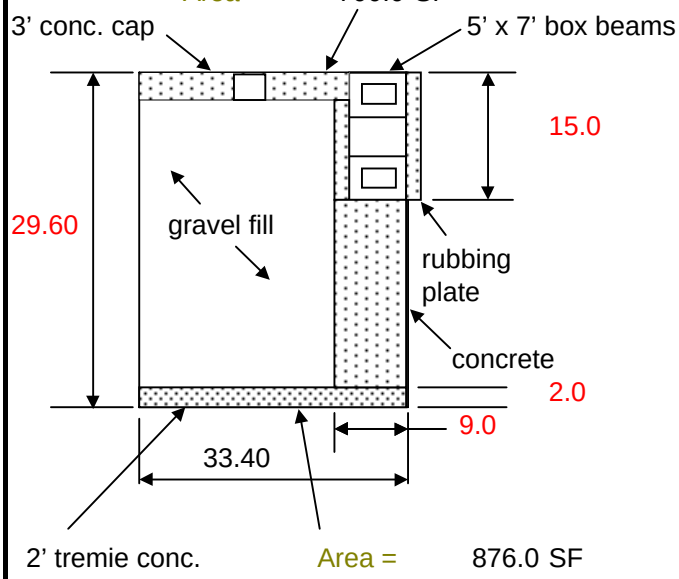

Area = 876.0 SF

Note: For quantities change the RED values in the cells of the dimensioned cross section shown.

Cast-in-Place Concrete

3' conc. cap	=	77	CY
concrete	=	115	CY
Total	=	192	CY
for 7 cells	=	1,341	CY
Tremie concrete	=	65	CY
for 7 cells	=	455	CY

Precast Concrete

5'x7' beam	=	889	CY
rubbing pl.	=	500	CY
Total	=	1,389	CY
Gravel fill	=	640	CY
for 7 cells	=	4,477	CY
Sheet Piling	=	3,106	SF
for 7 cells	=	21,741	SF

Upstream Guidewall Cell, Large
(typical)
Area = 2,124.0 SF

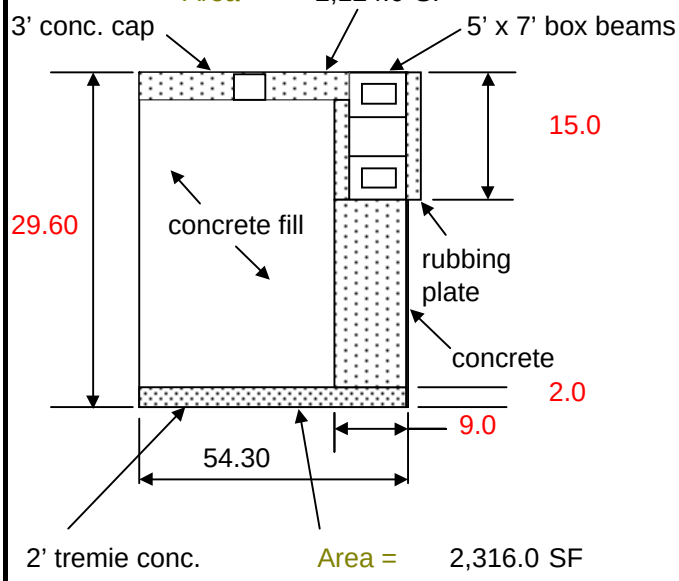

Area = 2,316.0 SF

Note: For quantities change the RED values in the cells of the dimensioned cross section shown.

Cast-in-Place Concrete

3' conc. cap	=	235	CY
concrete	=	143	CY
Total	=	378	CY
Tremie concrete	=	172	CY
Permanent Cell Fill		1,934	CY
Sheet Piling	=	5,049	SF

LOCK AND DAM NO.14, LOCATION 4, TYPE B
1200' LOCK ALTERNATIVE (ROCK FOUNDED)

Subject		Date
L/D 14 Location 4 Quantities for Type B Lock, Crane-In Construcion		Sep 96
Computed by Michael Cummings	Checked	Sheet 6 of 7

Downstream Guidewall Cell, Small
(typical)
Area = 700.0 SF

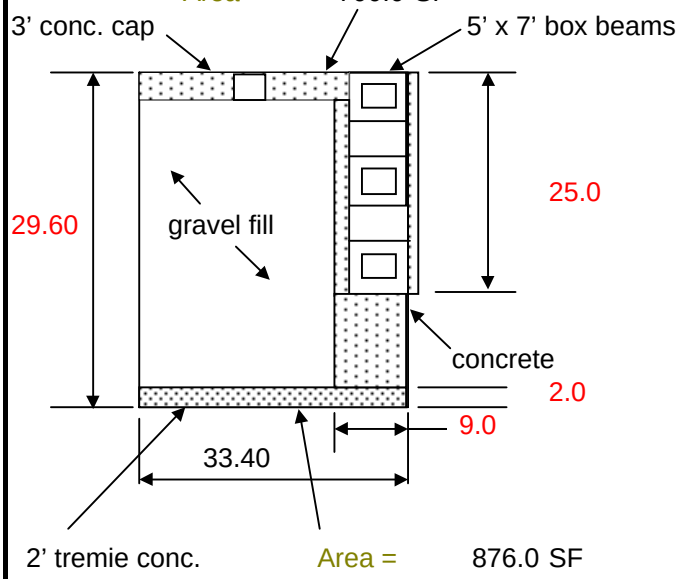

Area = 876.0 SF

Note: For quantities change the RED values in the cells of the dimensioned cross section shown.

Cast-in-Place Concrete

3' conc. cap	=	77	CY
concrete	=	67	CY
Total	=	143	CY
for 14 cells	=	2,005	CY
Tremie concrete	=	65	CY
for 14 cells	=	910	CY

Precast Concrete

5'x7' beam	=	2,667	CY
rubbing pl.	=	1,667	CY
Total	=	4,333	CY
Gravel fill	=	640	CY
for 14 cells	=	8,954	CY
Sheet Piling	=	3,106	SF
for 14 cells	=	43,483	SF

Downstream Guidewall Cell, Large
(typical)
Area = 2,124.0 SF

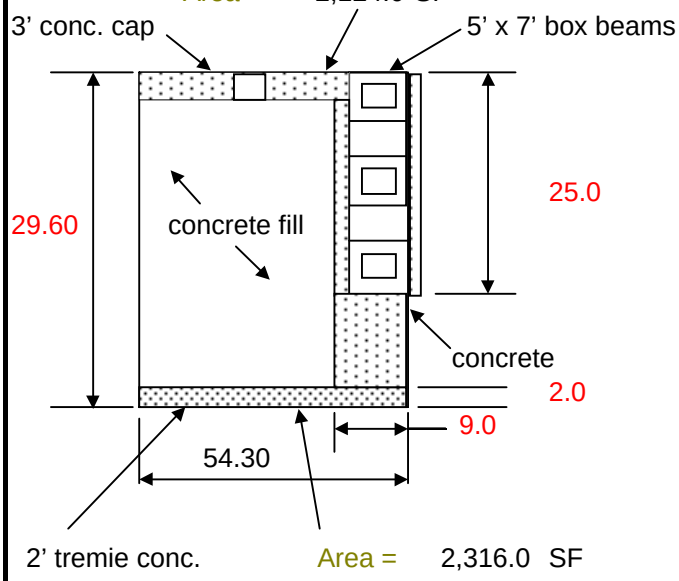

Area = 2,316.0 SF

Note: For quantities change the RED values in the cells of the dimensioned cross section shown.

Cast-in-Place Concrete

3' conc. cap	=	235	CY
concrete	=	304	CY
Total	=	539	CY
Tremie concrete	=	172	CY
Permanent Cell Fill		1,934	CY
Sheet Piling	=	5,049	SF

LOCK AND DAM NO.14, LOCATION 4, TYPE B
1200' LOCK ALTERNATIVE (ROCK FOUNDED)

Subject		Date
L/D 14 Location 4 Quantities for Type B Lock, Crane-In Construcion		Sep 96
Computed by Michael Cummings	Checked	Sheet 7 of 7

LOCK GUIDEWALLS :

A. UPSTREAM GUIDEWALL

1. Cast-in-place concrete

Volume = 1,719 CY

2. Precast concrete

Volume = 1,389 CY

3. Gravel Fill

Volume = 4,477 CY

4. Sheet Piling

Area = 26,791 SF

5. Permanent Cell Fill

Volume = 1,934 CY

6. Tremie Concrete

Volume = 627 CY

B. DOWNSTREAM GUIDEWALL

1. Cast-in-place concrete

Volume = 2,544 CY

2. Precast concrete

Volume = 4,333 CY

3. Gravel Fill

Volume = 8,954 CY

4. Sheet Piling

Area = 48,532 SF

5. Permanent Cell Fill

Volume = 1,934 CY

6. Tremie Concrete

Volume = 1,082 CY

Guidewall Summary

Total Cast-in-Place Concrete	4,263	CY
Total Precast Concrete	5,722	CY
Total Gravel Fill	13,432	CY
Total Sheet Piling	75,323	SF
Total Permanent Cell Fill	3,869	CY
Total Tremie Concrete	1,709	CY

LOCK AND DAM NO.14, LOCATION 4, TYPE C
1200' LOCK ALTERNATIVE (ROCK FOUNDED)

ACCOUNT CODE	ITEM	QUANTITY	UNIT	UNIT PRICE ($'s)	AMOUNT ($1,000's)
01.	**LANDS AND DAMAGES**				
	REAL ESTATE	1	JOB	SUM	350
04.	**DAMS**				
	DEMOLITION (TAINTER GATE BAY NO.1)	1	JOB	SUM	1,504
	CONCRETE (TIE-IN TO EXISTING LOCK)	362	CY	280.00	101
	MISCELLANEOUS	1	JOB	SUM	150
	REPLACEMENT TAINTER GATE	1	JOB	SUM	10,200
	04 DAMS SUBTOTAL				11,955
05.	**LOCKS**				
	SITEWORK				
	MOBILIZATION	1	JOB	SUM	8,000
	DEMOLITION (AUXILIARY LOCK AREA)	1	JOB	SUM	5,700
	DREDGING	86,500	CY	4.50	389
	ROCK EXCAVATION	50,000	CY	45	2,250
	EXTENSION OF EXISTING UPSTREAM GUIDEWALL	1	JOB	SUM	7,700
	COFFERDAM FILL	167,280	CY	14.50	2,426
	COFFERDAM DEWATERING	1	JOB	SUM	8,000
	CONCRETE				
	CAST IN PLACE REINFORCED CONCRETE	27,400	CY	280	7,672
	GRAVEL FILL	50,300	CY	15.00	755
	METALS				
	SHEET PILING (CLOSURE, PS31)	232,500	SF	25.00	5,813
	STRUCTURAL STEEL (GATES, VALVES, TRASHRACKS)	1	JOB	SUM	3,250
	STRUCTURAL STEEL (MISCELLANEOUS - LADDERS, ETC.)	1	JOB	SUM	2,500
	ELECTRICAL				
	ELECTRICAL SYSTEM	1	JOB	SUM	4,700
	MECHANICAL				
	GATE AND VALVE OPERATING MACHINERY	1	JOB	SUM	2,750
	MECHANICAL SYSTEMS	1	JOB	SUM	3,200
	MISCELLANEOUS	1	JOB	SUM	9,022
	05 LOCKS SUBTOTAL				74,126
05.60.	**GUIDEWALLS**				
	CONCRETE				
	CAST IN PLACE REINFORCED CONCRETE	4,263	CY	280.00	1,194
	PRECAST CONCRETE BEAMS (W/REINFORCEMENT)	8,960	LF	1,170.00	10,483
	TREMIE CONCRETE	1,709	CY	210.00	359
	METALS				
	SHEETPILING FOR CELLS (PS31)	75,323	SF	25.00	1,883
	STRUCTURAL STEEL	1	JOB	SUM	900
	05.60 GUIDEWALLS SUBTOTAL				14,819
09.	**CHANNEL WORK**	1	JOB	SUM	6,520
	PROJECT SUBTOTAL				107,770
	CONTINGENCIES 25%				26,943
	PROJECT SUBTOTAL WITH CONTINGENCIES				135,000
30.	**PLANNING, ENGINEERING, AND DESIGN (10%)**				14,000
31.	**CONSTRUCTION MANAGEMENT (10%)**				14,000
	PROJECT TOTAL				163,000

LOCK AND DAM NO.14, LOCATION 4, TYPE C
1200' LOCK ALTERNATIVE (ROCK FOUNDED)

Subject	ROCK FOUNDED LOCKS: L/D 14 Location 4, Quantities for Type C Lock	Date Sep 96
Computed by Michael Cummings	Checked	Sheet 1 of 6

Crane-In Gate Monolith

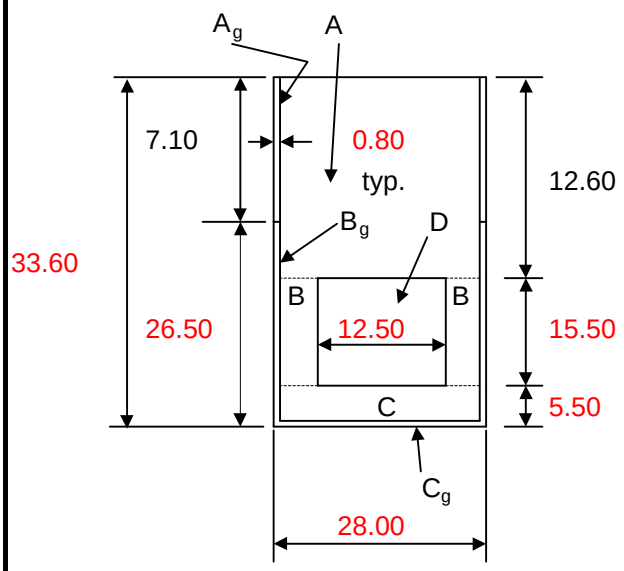

US lngth = .0 DS lngth = 250.0

Note: For quantities change the values in the cells of the dimensioned cross section shown. RED characters can be redimensioned.

AREAS: Cast concrete, one monolith

A =	332.6	ft^2	
B =	215.5	ft^2	
C =	124.1	ft^2	
D =	193.8	ft^2	CULVERT
Total =	672.2	ft^2	

AREAS: Precast concrete, one monolith

A_g =	11.4	ft^2
B_g =	42.4	ft^2
C_g =	21.1	ft^2
Total =	74.9	ft^2

hght chk = 33.60 right side
hght chk = 33.60 left side

Typical sheet pile cell for the lockwall

Area = 661.0 ft^2

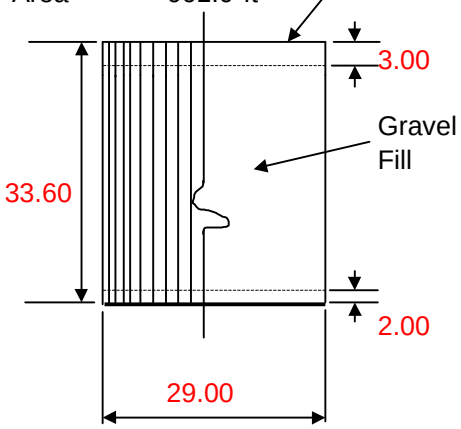

Pile type: PSA23 Choose PSA23, PS27.5, PS31
Area between cells:

Area =	236.0	ft^2
distance =	6.03	ft
Length =	1.33	ft of a single pile
Number in cell =	69	piles
No. in space =	22	piles

LS lngth = 465.0 RS lngth = 975.0

Typical cell of cofferdam

Area = 1,521.0 ft^2

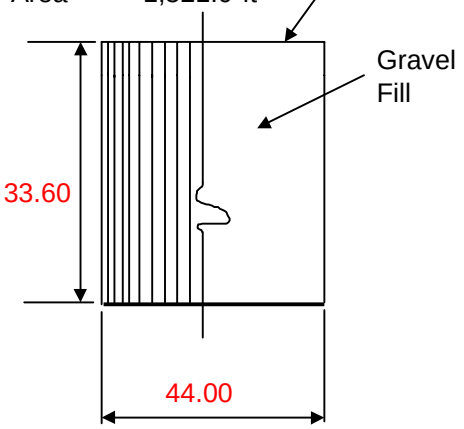

Pile type: PS31 Choose PSA23, PS27.5, PS31
Area between cells:

Area =	694.0	ft^2
distance =	14.66	ft
Length =	1.64	ft of a single pile
Number in cell =	84	piles
No. in space =	38	piles

US lngth = 110.0 DS lngth = 110.0

LOCK AND DAM NO.14, LOCATION 4, TYPE C
1200' LOCK ALTERNATIVE (ROCK FOUNDED)

Subject		Date
L/D 14 Location 4, Quantities for Type C Lock		Sep 96
Computed by Michael Cummings	Checked	Sheet 2 of 6

LOCK CHAMBER WALLS:

A. SHEETPILE CELLS:

1. River side walls:

(a) No. of cells = 28.0
Total = 2,548.0 piles

(b) Volume of Fill required:
Volume = 26,604.4 CY

2. Land side walls:

(a) No. of cells = 14.0
Total = 1,274.0 piles

Volume of Fill required:
Volume = 13,302.2 CY

Total piles = 3,822.0 **Total Fill Volume =** 39,907.0 CY

Lock wall concrete caps and tremie concrete:
Volume = 6,976.7 CY

B. GATE MONOLITHS: Gross estimate of concrete, does not include any machinery spaces

1. Upstream cast in place concrete:
Volume = .0 CY

2. Downstream cast in place concrete:
Volume = 12,447.6 CY

(a). Upstream Pre-cast concrete
Volume = 0 CY

(b). Upstream Pre-cast concrete
Volume = 693.3 CY

COFFERDAMS:

1. Cofferdam: #1, Upstream

Number = 2.0 cells
Total = 488.0 piles

2. Cofferdam: #2, Downstream

Number = 2.0 cells
Total Fill Volume = 10,338.0 CY

PRE-CAST (rubbing surface on intermediate lock wall)

Thickness	2.0 ft	Length	465.0 ft
Height	32.7 ft		

Total = 2252.7 CY

BUMPER SYSTEM:

A. Downstream:
Volume = .0 CY

B. Upstream:
Volume = .0 CY

SILLS:

Length	120.0 ft
Width	111.0 ft
Height	8.0 ft

SILLS:
Volume = 7,893.3 CY

Subject		Date
L/D 14 Location 4, Quantities for Type C Lock		Sep 96
Computed by Michael Cummings	Checked	Sheet 3 of 6

GUIDEWALLS: Information is on another Excel sheet

SUMMARY:

CONCRETE: (Cast in place)

A.	Lockwalls =	6,976.7	CY
B.	Gate monoliths =	12,447.6	CY
C.	Sills =	7,893.3	CY
	Total =	27,400.0	CY

PRE-CAST CONCRETE:

A.	Gate monoliths =	693.3	CY
B.	Precast on intermediate lockwall =	2,252.7	CY
	Total =	3,000.0	CY

SHEETPILES:

A.	Required number for cofferdam =	488.0	piles
B.	Required number for lock walls =	3,822.0	piles
	Total =	4,400.0	piles
	Total =	232,500.0	SF of piling

FILL:

A.	Required for the main lock walls =	39,907.0	CY
B.	Required for the cofferdams =	10,338.0	CY
	Total =	50,300.0	CY

LOCK AND DAM NO.14, LOCATION 4, TYPE C
1200' LOCK ALTERNATIVE (ROCK FOUNDED)

Subject		Date
L/D 14 Location 4 Quantities for Type C Lock, Crane-In Construcion		Sep 96
Computed by Michael Cummings	Checked	Sheet 4 of 6

Upstream Guidewall Cell, Small

(typical)

Area = 700.0 SF

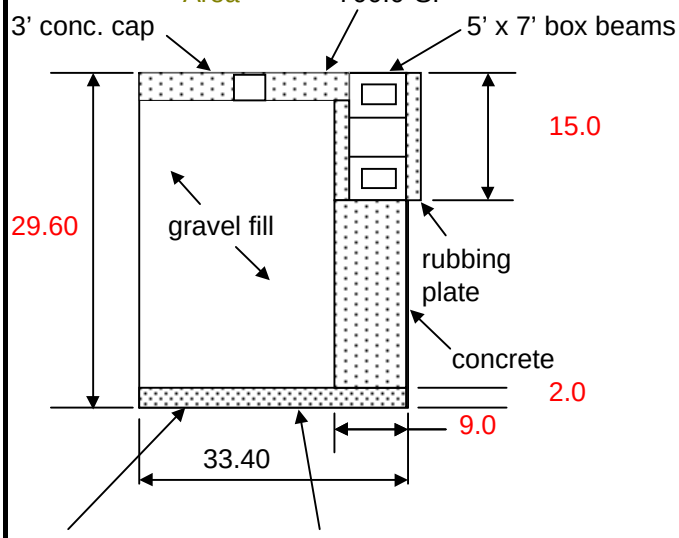

Area = 876.0 SF

Note: For quantities change the RED values in the cells of the dimensioned cross section shown.

Cast-in-Place Concrete

3' conc. cap	=	77	CY
concrete	=	115	CY
Total	=	192	CY
for 7 cells	=	1,341	CY
Tremie concrete	=	65	CY
for 7 cells	=	455	CY
Precast Concrete			
5'x7' beam	=	889	CY
rubbing pl.	=	500	CY
Total	=	1,389	CY
Gravel fill	=	640	CY
for 7 cells	=	4,477	CY
Sheet Piling	=	3,106	SF
for 7 cells	=	21,741	SF

Upstream Guidewall Cell, Large

(typical)

Area = 2,124.0 SF

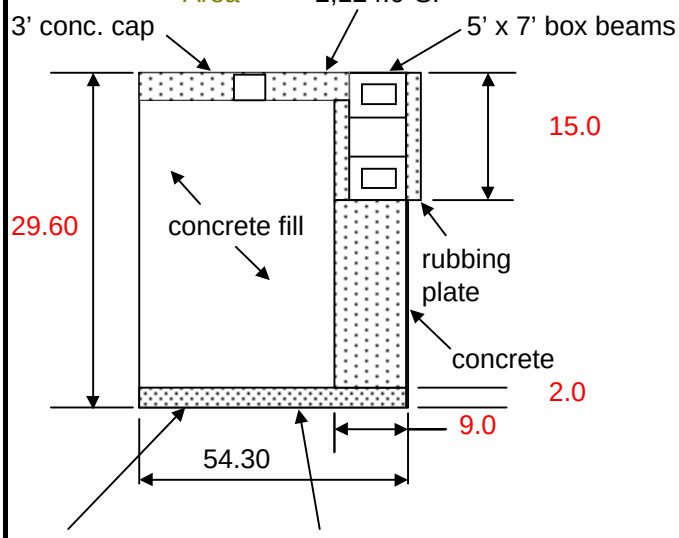

Area = 2,316.0 SF

Note: For quantities change the RED values in the cells of the dimensioned cross section shown.

Cast-in-Place Concrete

3' conc. cap	=	235	CY
concrete	=	143	CY
Total	=	378	CY
Tremie concrete	=	172	CY
Permanent Cell Fill		1,934	CY
Sheet Piling	=	5,049	SF

LOCK AND DAM NO.14, LOCATION 4, TYPE C
1200' LOCK ALTERNATIVE (ROCK FOUNDED)

Subject		Date
L/D 14 Location 4 Quantities for Type C Lock, Crane-In Construcion		Sep 96
Computed by Michael Cummings	Checked	Sheet 5 of 6

Downstream Guidewall Cell, Small

(typical)

Area = 700.0 SF

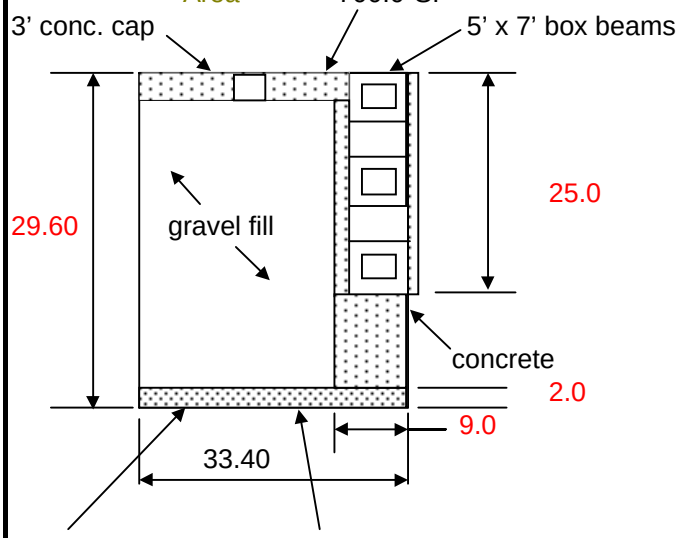

Area = 876.0 SF

Note: For quantities change the RED values in the cells of the dimensioned cross section shown.

Cast-in-Place Concrete			
3' conc. cap	=	77	CY
concrete	=	67	CY
Total	=	143	CY
for 14 cells	=	2,005	CY
Tremie concrete	=	65	CY
for 14 cells	=	910	CY
Precast Concrete			
5'x7' beam	=	2,667	CY
rubbing pl.	=	1,667	CY
Total	=	4,333	CY
Gravel fill	=	640	CY
for 14 cells	=	8,954	CY
Sheet Piling	=	3,106	SF
for 14 cells	=	43,483	SF

Downstream Guidewall Cell, Large

(typical)

Area = 2,124.0 SF

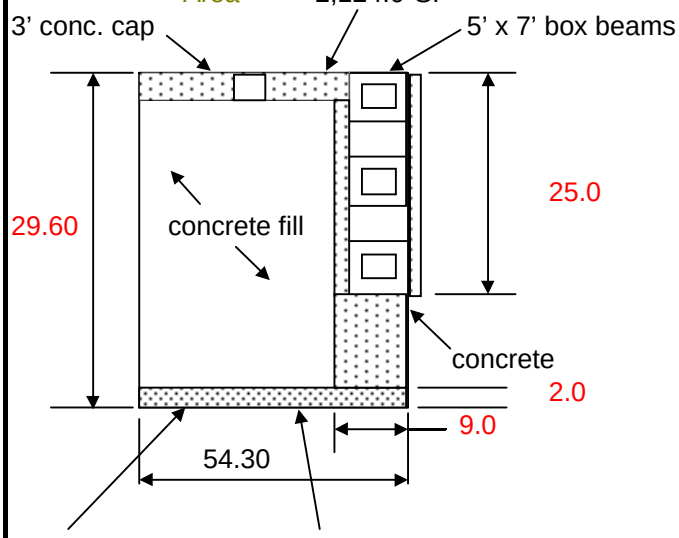

Area = 2,316.0 SF

Note: For quantities change the RED values in the cells of the dimensioned cross section shown.

Cast-in-Place Concrete			
3' conc. cap	=	235	CY
concrete	=	304	CY
Total	=	539	CY
Tremie concrete	=	172	CY
Permanent Cell Fill		1,934	CY
Sheet Piling	=	5,049	SF

LOCK AND DAM NO.14, LOCATION 4, TYPE C
1200' LOCK ALTERNATIVE (ROCK FOUNDED)

Subject		Date
L/D 14 Location 4 Quantities for Type C Lock, Crane-In Construcion		Sep 96
Computed by Michael Cummings	Checked	Sheet 6 of 6

LOCK GUIDEWALLS :

A. UPSTREAM GUIDEWALL

1. Cast-in-place concrete

Volume = 1,719 CY

2. Precast concrete

Volume = 1,389 CY

3. Gravel Fill

Volume = 4,477 CY

4. Sheet Piling

Area = 26,791 SF

5. Permanent Cell Fill

Volume = 1,934 CY

6. Tremie Concrete

Volume = 627 CY

B. DOWNSTREAM GUIDEWALL

1. Cast-in-place concrete

Volume = 2,544 CY

2. Precast concrete

Volume = 4,333 CY

3. Gravel Fill

Volume = 8,954 CY

4. Sheet Piling

Area = 48,532 SF

5. Permanent Cell Fill

Volume = 1,934 CY

6. Tremie Concrete

Volume = 1,082 CY

Guidewall Summary

Total Cast-in-Place Concrete	4,263	CY
Total Precast Concrete	5,722	CY
Total Gravel Fill	13,432	CY
Total Sheet Piling	75,323	SF
Total Permanent Cell Fill	3,869	CY
Total Tremie Concrete	1,709	CY

LOCK AND DAM NO. 13, LOCATION 2, TYPE B
(PILE-FOUNDED)

CCOUNT CODE	ITEM	QUANTITY	UNIT	UNIT PRICE ($'s)	AMOUNT ($1,000's)
01.	**LANDS AND DAMAGES**				
	REAL ESTATE	1	JOB	SUM	230
04.	**DAMS**				
	04 DAMS SUBTOTAL				0
05.	**LOCKS**				
	SITEWORK				
	MOBILIZATION	1	JOB	SUM	10,650
	DEMOLITION	1	JOB	SUM	1,910
	EXCAVATION	27,090	CY	4.5	122
	BACKFILL	22,000	CY	6.25	138
	WALL FILL	8,675	CY	10.00	87
	SCOUR PROTECTION	429	TN	20.00	9
	SCOUR STONE IN LOCK FLOOR	9,030	TN	25.00	226
	FOUNDATION/LOCK DEWATERING	1	JOB	SUM	3,000
	MARINE FACILITIES, TEMP. MOORING STR.	1	JOB	SUM	3,900
	CONCRETE				
	UNDERBASE GROUTING	5,297	CY	200	1,059
	CAST IN PLACE REINFORCED CONCRETE	35,182	CY	217	7,634
	PRECAST CONCRETE	8,802	CY	400	3,521
	TREMIE CONCRETE	5,651	CY	165	932
	POST TENSION STEEL	135,000	LB	2.5	338
	FURNISH AND SET LANDING PADS	74	EA	19000	1,406
	SET PRECAST WALL UNITS	28	EA	16000	448
	FLOAT IN AND SET FLOOR UNITS	26	EA	16000	416
	FLOAT IN AND SET MITER GATE SILL	1	JOB	SUM	140
	STEEL REINFORCEMENT	2,111,000	LB	0.75	1,583
	METALS				
	SHEET PILING	55,186	SF	21.52	1,188
	WALL UNIT BRACING	1	JOB	SUM	250
	FOUNDATION PILING AND TESTING	1	JOB	SUM	5,300
	STRUCTURAL STEEL (GATES, VALVES, TRASHRACKS, BU	1	JOB	SUM	11,613
	STRUCTURAL STEEL (MISCELLANEOUS - LADDERS, ETC.	1	JOB	SUM	3,040
	ELECTRICAL				
	ELECTRICAL SYSTEM	1	JOB	SUM	4,700
	INSTRUMENTATION	1	JOB	SUM	1,250
	MECHANICAL				
	GATE AND VALVE OPERATING MACHINERY	1	JOB	SUM	2,750
	MECHANICAL SYSTEMS	1	JOB	SUM	3,200
	MISCELLANEOUS	1	JOB	SUM	1,950
	05 LOCKS SUBTOTAL				72,759
05.60.	**GUIDEWALLS**				
	SITEWORK				
	EXCAVATION	118,490	CY	4.5	533
	BACKFILL	73,640	CY	10	736
	SCOUR PROTECTION	18,900	TON	15	284
	CONCRETE				
	42" DIAMETER PILES	2,462	LF	400	985
	CAST IN PLACE REINFORCED CONCRETE	1,570	CY	150	236
	PRECAST BEAMS	10,900	CY	500	5,450
	PRECAST BEAM SEATS	165	CY	1000	165
	TREMIE CONCRETE	130	CY	500	65
	PERMANENT CELL FILL (C0NCRETE)	14,235	CY	200	2,847
	GROUT FOR BEAMS	490	CY	1000	490
	STEEL REINFORCEMENT	1,840,000	LB	0.75	1,380
	GRAVEL FILL	27,993	CY	10	280
	METALS				
	SHEET PILING FOR CELLS (PS31)	177,876	SF	25.00	4,447
	SHEET PILING CUTOFF WALL (PZ35)	45,200	SF	30.00	1,356
	SHEET PILE RETAINING WALL (PZ40)	42,000	SF	30.00	1,260
	FOUNDATION PILING		JOB	SUM	318
	POST TENSIONING	1,280	LF	30	38
	STRUCTURAL STEEL	1	JOB	SUM	4,060
	05.60 GUIDEWALLS SUBTOTAL				24,930
	PROJECT SUBTOTAL				97,919
	CONTINGENCIES 25%				24,480
	PROJECT SUBTOTAL WITH CONTINGENCIES				122,000
30.	**PLANNING, ENGINEERING, AND DESIGN (10%)**				12,000
31.	**CONSTRUCTION MANAGEMENT (10%)**				12,000
	PROJECT TOTAL				$ 146,000

		QUANTITY CALCULATIONS									
	L/D 13 Location 2, Type B, Pile Founded							Sheet 1_ of 3____			
1	Remove existing sill down to										
	elev. 405.33	25	x	2	x	110	=	5,500.00	CF	203.70	CY
2	Remove existing 2' thick slab	95.25	x	2	x	110	=	20,955.00	CF	776.11	CY
3	Demolish existing guidewall, to										
	include timber crib and pile	502	x	30	x	53	=	798,180.00	CF	29,562.22	CY
4	Install sheet piling, PZ27	41.0	x	673	x	2	=	55,186.00	SF		
5	Excavation	6.3	x	172		675	=	731,430.00	CF	27,090.00	CY
6	Place scour stone	1.5	x	172	x	675	=	174,150.00	CF	6,450.00	CY
7	Place scour protection (riprap)	3	x	25	x	110	=	8,250.00	CF	305.56	CY
8	Install piling, HP 14 x 89										
	(54 ea per monolith @ 50' long										
	for 28 monoliths)	54	x	50	x	28	=	75,600.00	LF		
	Lockwall/floor connection										
9	HP14 x 117 stud w/welded ribs	23	x	2	=	46	EA				
	thixotropic grout @ HP studs	23.5	x	46	=	1,081.00	CF				
	thixotropic grout @ joints per ft	0.25	x	5	x	1296	=	1,620.00	CF		
10	Grout under base filling	2	x	650	x	110	=	143,000.00	CF	5,296.30	CY
11	Install piling, HP 14 x 89										
	(5 ea per floor unit @ 45' long										
	for 26 floor units	5	x	45	x	26	=	5,850.00	LF		
							=	26	EA		
12	Sand infill of floor units, large	((9.25' x 6.25' x2)+(19.75' x 6.25' x 4))x 510'					=	310,794.00	CF		
	" " " " " , small	((9.25' x 3' x 2)+(19.75' x 3' x 4)) x 66					=	19,305.00	CF		
								330,099.00	CF	12,225.89	CY
13	Concrete										
	riverward wall										
	-bottom lift (tremie)	5.5	x	23	x	603	=	76,279.50	CF		
	-2nd lift (reinforced)	4	x	28	x	603	=	67,536.00	CF		
	-3rd lift (reinforced)inside	13.5	x	7.75	x	603	=	63,088.88	CF		
	- " " " outside	13.5	x	7.75	x	603	=	63,088.88	CF		
	-4th lift (reinforced)	8.5	x	26	x	603	=	133,263.00	CF		
	-5th lift (reinforced)	3.3	x	28	x	603	=	55,717.20	CF		
	-6th lift (reinforced)outside	5.00	x	9	x	603	=	27,135.00	CF		
	- " " " inside	5.00	x	9	x	603	=	27,135.00	CF		
	-7th lift (reinforced)outside	7.0	x	9	x	603	=	37,989.00	CF		
								551,232.45		20,416.02	CY
14	Concrete										
	landward wall										
	-bottom lift (tremie)	5.5	x	23	x	603	=	76,279.50	CF		
	-2nd lift (reinforced)	4	x	28	x	603	=	67,536.00	CF		
	-3rd lift (reinforced)inside	13.5	x	7.75	x	603	=	63,088.88	CF		
	- " " " outside	13.5	x	7.75	x	603	=	63,088.88	CF		
	-4th lift (reinforced)	8.5	x	26	x	603	=	133,263.00	CF		
	-5th lift (reinforced)	3.3	x	28	x	603	=	55,717.20	CF		
	-6th lift (reinforced)outside	5.00	x	9	x	603	=	27,135.00	CF		
	- " " " inside	5.00	x	9	x	603	=	27,135.00	CF		
	-7th lift (reinforced)outside	7.0	x	9	x	603	=	37,989.00	CF		
								551,232.45		20,416.02	CY
	Total Concrete									40,832.03	CY
											Ld132bpf

LOCK AND DAM NO. 13, LOCATION 2, TYPE C
(PILE-FOUNDED)

CCOUNT CODE	ITEM	QUANTITY	UNIT	UNIT PRICE ($'s)	AMOUNT ($1,000's)
01.	**LANDS AND DAMAGES**				
	REAL ESTATE	1	JOB	SUM	230
04.	**DAMS**				
	04 DAMS SUBTOTAL				0
05.	**LOCKS**				
	SITEWORK				
	MOBILIZATION	1	JOB	SUM	10,650
	DEMOLITION	1	JOB	SUM	1,910
	EXCAVATION	28,299	CY	4.5	127
	BACKFILL	19,700	CY	10.00	197
	SCOUR PROTECTION	2,000	TN	15.00	30
	SCOUR STONE IN LOCK FLOOR	16,860	TN	15.00	253
	GRAVEL FILTER IN LOCK FLOOR	16,090	TN	20.00	322
	FOUNDATION/LOCK DEWATERING	1	JOB	SUM	3,000
	MARINE FACILITIES, TEMP. MOORING STR.	1	JOB	SUM	3,900
	CONCRETE				
	STRUCTURAL GROUTING	700	CY	200	140
	CAST IN PLACE REINFORCED CONCRETE	30,827	CY	217	6,689
	CAST IN PLACE CONNECTIONS	200	CY	725	145
	PRECAST CONCRETE	10,007	CY	400	4,003
	TREMIE CONCRETE, BASE .	3,574	CY	165	590
	PRECAST FLOOR PANELS	8,210	CY	286	2,348
	POST TENSION STEEL	185,300	LB	2.5	463
	FURNISH AND SET LANDING PADS	74	EA	19000	1,406
	SET PRECAST WALL UNITS	28	EA	16000	448
	FLOAT IN AND SET MITER GATE SILL	1	JOB	SUM	140
	STEEL REINFORCEMENT	1,850,000	LB	0.75	1,388
	METALS				
	SHEET PILING	47,110	SF	21.52	1,014
	WALL UNIT BRACING	1	JOB	SUM	250
	FOUNDATION PILING AND TESTING	1	JOB	SUM	3,487
	STRUCTURAL STEEL (GATES, VALVES, TRASHRACKS, B	1	JOB	SUM	11,613
	STRUCTURAL STEEL (MISCELLANEOUS - LADDERS, ET	1	JOB	SUM	3,040
	ELECTRICAL				
	ELECTRICAL SYSTEM	1	JOB	SUM	4,700
	INSTRUMENTATION	1	JOB	SUM	1,250
	MECHANICAL				
	GATE AND VALVE OPERATING MACHINERY	1	JOB	SUM	2,750
	MECHANICAL SYSTEMS	1	JOB	SUM	3,200
	MISCELLANEOUS	1	JOB	SUM	1,950
	05 LOCKS SUBTOTAL				71,403
05.60.	**GUIDEWALLS**				
	SITEWORK				
	EXCAVATION	118,490	CY	4.5	533
	BACKFILL	73,640	CY	10	736
	SCOUR PROTECTION	18,900	TON	15	284
	CONCRETE				
	42" DIAMETER PILES	2,462	LF	400	985
	CAST IN PLACE REINFORCED CONCRETE	1,570	CY	150	236
	PRECAST BEAMS	10,900	CY	500	5,450
	PRECAST BEAM SEATS	165	CY	1000	165
	TREMIE CONCRETE	130	CY	500	65
	PERMANENT CELL FILL (C0NCRETE)	14,045	CY	200	2,809
	GROUT FOR BEAMS	490	CY	1000	490
	STEEL REINFORCEMENT	1,840,000	LB	0.75	1,380
	GRAVEL FILL	27,611	CY	10	276
	METALS				
	SHEET PILING FOR CELLS (PS31)	177,876	SF	25.00	4,447
	SHEET PILE FOR CUTOFF WALL (PZ35)	45,182	SF	30.00	1,355
	SHEET PILE RETAINING WALL (PZ40)	41,916	SF	30.00	1,257
	FOUNDATION PILING	1	JOB	SUM	318
	POST TENSIONING	1,280	LF	30	38
	STRUCTURAL STEEL	1	JOB	SUM	4,060
	05.60 GUIDEWALLS SUBTOTAL				24,885
	PROJECT SUBTOTAL				96,517
	CONTINGENCIES 25%				24,129
	PROJECT SUBTOTAL WITH CONTINGENCIES				121,000
30.	**PLANNING, ENGINEERING, AND DESIGN (10%)**				12,000
31.	**CONSTRUCTION MANAGEMENT (10%)**				12,000
	PROJECT TOTAL				$ 145,000

		QUANTITY CALCULATIONS									
	L/D 13, Location 2, Type C, Pile Founded							Sheet 1_ of	3_		
1	Remove existing sill down to										
	elev. 577.83	25	x	2	x	110	=	5,500.00	CF	203.70	CY
2	Remove existing 2' thick slab	95.25	x	2	x	110	=	20,955.00	CF	776.11	CY
3	Demolish existing guidewall, to	502	x	30	x	53	=	798,180.00	CF	29,562.22	CY
	include timber crib and pile										
4	Install sheet piling, PZ27	35	x	673	x	2	=	47,110.00	SF		
5	Place scour stone (under walls)	1.5	x	60	x	600	=	54,000.00	CF	2,000.00	CY
6	Excavation	11.5	x	110	x	604	=	764,060.00	CF	28,298.52	CY
7	Install piling, HP 14 x 89										
	(24 ea per monolith @50' long										
	for 28 monoliths)	24	x	50	x	28	=	33,600.00	LF		
8	Steel footing box(1/2"steel plate)										
	riverward wall										
	20.42 lb x [(6'x3'x2)+(4'x3'x2)]=1,225 LB @ 30 locations							36,750.00	LB		
	landward wall										
	20.42 lb x [(6'x3'x2)+(4'x3'x2)]=1,225 LB @ 30 location							36,750.00	LB		
								73,500.00	LB		
9	Install piling, HP 14 x 89								or	2,722.22	TN
	for chamber floor paving blocks										
	(7 ea per joint @ 50' for 14 ea										
	joints)	50	x	7	x	14	=	4,900.00	LF		
10	Scour stone, (removed prior to										
	floor construction)	3	x	110	x	580	=	191,400.00	CF	7,088.89	CY
11	Filter layer	2	x	110	x	580	=	127,600.00	CF	4,725.93	CY
12	Filter gravel	2	x	110	x	580	=	127,600.00	CF	4,725.93	CY
13	Paving blocks (3'x30'x14')										
	1,260cf @ 8/row x 18 rows	1,260	x	8	x	18	=	181,440.00	CF	6,720.00	CY
14	Structural steel (per cell unit)										
	- W18 x 86 waler	86	x	154	=	13,244.00					
	- W18 x 86 brace	86	x	22	=	1,892.00					
	- C12 x 25 diagonal brace	25	x	232	=	5,800.00					
	(There are 30 cell units, 15 in each wall)					20,936.00	x	30	=	628,080.00	LB
									or	314.04	TN
15	Precast liner										
	riverward wall	23.8	x	603	x	1	=	14,351.40	CF		
	landward wall	23.8	x	603	x	1	=	14,351.40	CF		
								28,702.80	CF		
									or	1,063.07	CY
16	Precast concrete miter gate sill										
	and wall monoliths										
	Taken from quantity calc's from St. Paul District's Microstation analysis										
						- Slab volume			=	1,434.50	CY
						- Wall volume			=	771.32	CY
						- Concrete strut volume			=	17.25	CY
	Total Precast Concrete Volume for Miter Gate Sill & Wall Monoliths								=	2,223.07	CY
											Ld13 2cpf

LOCK AND DAM NO. 13, LOCATION 3, TYPE C
1200' LOCK ALTERNATIVE (PILE FOUNDED)

CCOUNT CODE	L/D 13	QUANTITY	UNIT	NIT PRICE ($'s)	AMOUNT ($1,000's)
01.	**LANDS AND DAMAGES**				
	REAL ESTATE	1	JOB	SUM	230
04.	**DAMS**				
	REMOVAL OF EXISTING STRUCTURES	1	JOB	SUM	150
	04 DAMS SUBTOTAL				150
05.	**LOCKS**				
	SITEWORK				
	MOBILIZATION	1	JOB	SUM	10,650
	DEMOLITION	1	JOB	SUM	1,910
	EXCAVATION (Lock chamber footprint)	89,100	CY	6.25	557
	FILL (Lock chamber footprint)	15,600	CY	20.00	312
	FOUNDATION FILL AT SCOUR HOLE	7,100	CY	18.75	133
	WALL FILL	15,760	CY	10.00	158
	CAPSTONE	52,660	TN	25.00	1,317
	RIPRAP	33,380	TN	20.00	668
	LEVELING STONE IN LOCK FLOOR	4,580	TN	15.00	69
	GRAVEL FILTER IN LOCK FLOOR	16,606	TN	15.00	249
	GEOTEXTILE	13,740	SY	6.00	82
	FOUNDATION/LOCK DEWATERING	1	JOB	SUM	3,000
	MARINE FACILITIES, TEMP. MOORING STR.	1	JOB	SUM	3,900
	CONCRETE				
	STRUCTURAL GROUTING	450	CY	200	90
	CAST IN PLACE REINFORCED CONCRETE	58,800	CY	217	12,760
	CAST IN PLACE CONNECTIONS	964	CY	725	699
	PRECAST CONCRETE	2,895	CY	400	1,158
	TREMIE CONCRETE	9,135	CY	165	1,507
	PRECAST FLOOR PAVERS AND STRUTS	15,450	CY	286	4,419
	SET PRECAST FLOOR BEAMS	31	EA	16000	496
	SET FLOOR PANELS	62	EA	10000	620
	STEEL REINFORCEMENT	6,586,000	LB	0.75	4,940
	METALS				
	SHEET PILING	260,100	SF	35.80	9,312
	SHEET PILE BRACING	1	JOB	SUM	350
	FOUNDATION PILING AND TESTING	222,300	LF	39.75	8,836
	STRUCTURAL STEEL (GATES, VALVES, TRASH	1	JOB	SUM	11,613
	STRUCTURAL STEEL (MISCELLANEOUS - LAD	1	JOB	SUM	3,040
	ELECTRICAL				
	ELECTRICAL SYSTEM	1	JOB	SUM	4,700
	INSTRUMENTATION	1	JOB	SUM	1,250
	MECHANICAL				
	GATE AND VALVE OPERATING MACHINERY	1	JOB	SUM	2,750
	MECHANICAL SYSTEMS	1	JOB	SUM	3,200
	MISCELLANEOUS	1	JOB	SUM	1,950
	05 LOCKS SUBTOTAL				96,693

LOCK AND DAM NO. 13, LOCATION 3, TYPE C
1200' LOCK ALTERNATIVE (PILE FOUNDED)

05.60.	**GUIDEWALLS**				
	SITEWORK				
	~~EXCAVATION~~ *(Included in Channel Work)*	0	CY	4.5	0
	~~BACKFILL~~ *None*	0	CY	10	0
	SCOUR PROTECTION	37,312	TON	15	560
	CONCRETE				
	42" DIAMETER PILES	5,120	LF	400	2,048
	CAST IN PLACE REINFORCED CONCRETE	977	CY	150	147
	PRECAST BEAMS	13,947	CY	500	6,973
	PRECAST BEAM SEATS	211	CY	1000	211
	TREMIE CONCRETE	168	CY	500	84
	PERMANENT CELL FILL (C0NCRETE)	7,806	CY	200	1,561
	GROUT FOR BEAMS	626	CY	1000	626
	STEEL REINFORCEMENT	2,351,969	LB	0.75	1,764
	GRAVEL FILL	38,234	CY	10	382
	METALS				
	SHEET PILING	1	JOB	SUM	6,131
	FOUNDATION PILING	1	JOB	SUM	256
	POST TENSIONING	1,634	LF	30	49
	STRUCTURAL STEEL	1	JOB	SUM	3,268
	FLOATING GUIDEWALL	1	JOB	SUM	3,750
	05.60 GUIDEWALLS SUBTOTAL				27,811
09.	**CHANNEL WORK**	1	JOB	SUM	1,350
	PROJECT SUBTOTAL				126,234
	CONTINGENCIES 25%				31,558
	PROJECT SUBTOTAL WITH CONTINGENCIES				157,792
30.	**PLANNING, ENGINEERING, AND DESIGN (10%)**				15,500
31.	**CONSTRUCTION MANAGEMENT (10%)**				15,500
	PROJECT TOTAL				$ 188,792

TOTAL BASIC LOCK COST (O4., 05., 05.60.) WITH CONTINGENCIES, PED, & CM*	**$ 189,000**

*(EXCLUDES REAL ESTATE, RELOCATION, AND CHANNEL WORK WHICH ARE MORE SITE-SPECIFIC.)

Subject	ROCK FOUNDED LOCKS: L/D 13 Location 3 Quantities for Type C Lock, Parallel Sheetpile Walls	Date June 1997
Computed by David R. Wehrley	Checked DRW	Sheet 1 of 4

Riverward Lockwall

(Including the miter gate monolith)

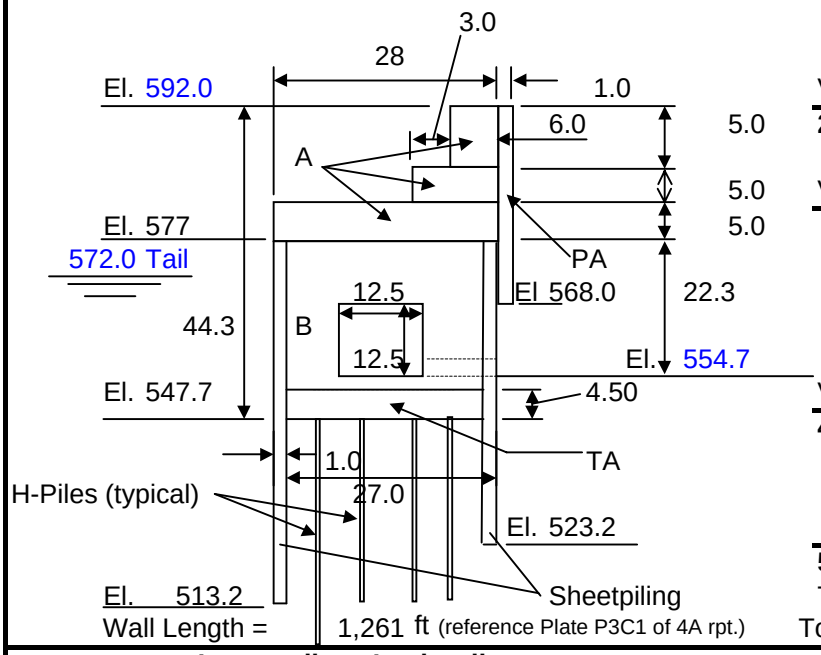

Wall Length = 1,261 ft (reference Plate P3C1 of 4A rpt.)

1. Cast in place concrete

A =	215.0	SF
B =	498.8	SF
Sum =	713.8	SF
Volume =	**33,339**	CY

2. Tremie concrete

TA =	121.5	SF
Volume =	**5,675**	CY

3. Precast concrete

PA =	24.0	SF
PB =	14.5	SF (Culvert top, not shown)
Sum =	38.5	SF
Volume =	**1,798**	CY

4. Sheetpiling

Ht. Left=	63.8	FT
Ht. Right=	53.8	FT
Area =	**148,294**	SF (both sides)

5. H-Piling = 54/45' mono x wall length

Total No.=	1,513	HP 14 X89
Total Lgth.=	**113,490**	LF HP

Intermediate Lockwall

(Including the miter gate monolith)

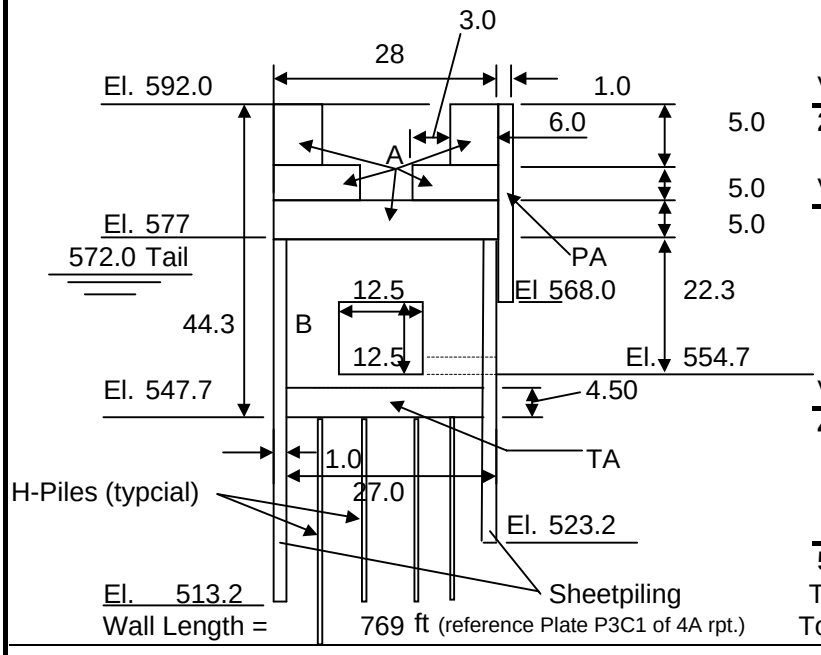

Wall Length = 769 ft (reference Plate P3C1 of 4A rpt.)

1. Cast in place concrete

A =	290.0	SF
B =	498.8	SF
Sum =	788.8	SF
Volume =	**22,468**	CY

2. Tremie concrete

TA =	121.5	SF
Volume =	**3,461**	CY

3. Precast concrete

PA =	24.0	SF
PB =	14.5	SF (Culvert top, not shown)
Sum =	38.5	SF
Volume =	**1,097**	CY

4. Sheetpiling

Ht. Left=	63.8	FT
Ht. Right=	53.8	FT
Area =	**90,434**	SF (both sides)

5. H-Piling = 54/45' mono x wall length

Total No.=	923	HP 14 X89
Total Lgth.=	**69,210**	FT HP

Subject		Date
L/D 13 Location 3 Quantities for Type C Lock, Parallel Sheetpile Walls		June 1997
Computed by David R. Wehrley	Checked DRW	Sheet 2 of 4

COFFERDAM (ONLY SINGLE WALL COFFERDAM -- FOR LOWER MITER GATE MONOLITH):

ASSUME THE SAME AS L/D 25

Extra Sheetpiling = 2 x (29+110+29) x length
= 21,437 LF Sheetpiling

LOWER MITER GATE SILL:

Length = 120.0 ft
Width = 110.0 ft
Average Height = 6.0 ft

Volume = 2,933.3 CY (cast-in-place concrete)

H-piling for sill: Assume 5' spacing each way, 75' long
Total = (120/5 x 110/5) x 75
= 39,600 LF (HP 14X89)

SUMMARY:

CONCRETE (Cast in place)

Lockwalls =	55,807	CY
Sills =	2,933	CY
Total =	58,800	CY

PRECAST CONCRETE

Total =	2,895	CY

TREMIE CONCRETE

Total =	9,135	CY

SHEETPILING

Required quantity for walls =	238,700	SF
Required quantity for cofferdam =	21,400	SF
Total =	260,100	SF of piling

FOUNDATION PILING

Total =	222,300	LF (HP 14 X 89)

Subject		Date
L/D 13 Location 3 Quantities for Type C Lock, Guardwalls		June 1997
Computed by David R. Wehrley	Checked David R. Wehrley	Sheet of 3 4

Upstream Guardwall Cell, Small (14 total)
(Downstream Quantities the same)

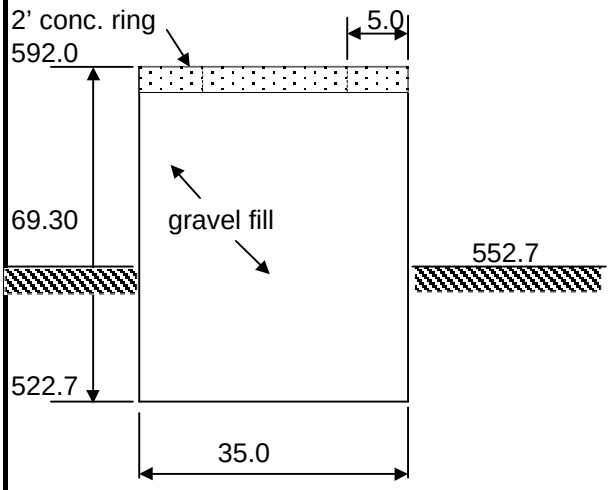

Except for those quantities computed here, all other quantities are assumed the same as for Lock 25 (the model site for pile-founded locks).

Cast-in-Place Concrete

2' conc. ring	=	34.9	CY
for 14 cells	=	489	CY
Gravel fill	=	1,366	CY
for 14 cells	=	19,117	CY
Sheet Piling	=	7,620	SF
for 14 cells	=	106,679	SF

Upstream Guardwall Cell, Large, Concrete filled (1 total)
(Downstream Quantities the same)

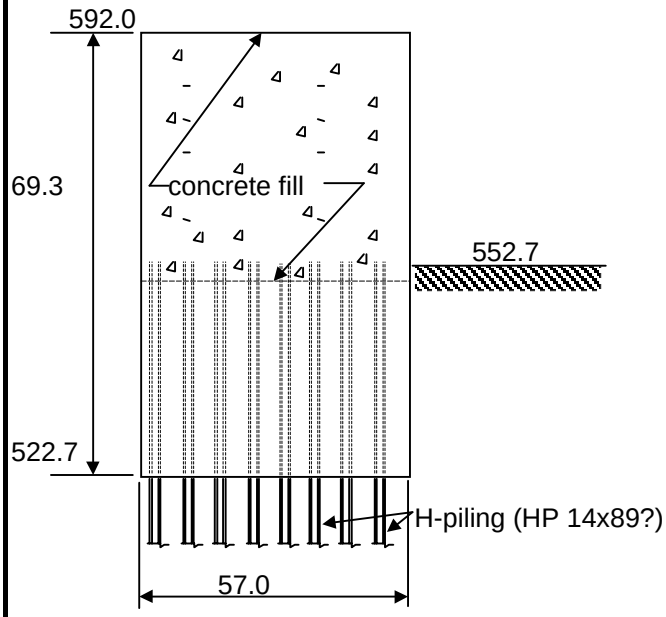

Concrete Fill for Cell
= 3,903 CY

Sheet Piling = 12,410 SF

H-piling:

No. of Piles	=	102	
Length of Piles	=	7,650	L.F.

Subject		Date
L/D 13 Location 3 Quantities for Type C Lock, Guardwalls		June 1997
Computed by David R. Wehrley	Checked David R. Wehrley	Sheet 4 of 4

LOCK GUIDEWALLS :

A. UPSTREAM GUIDEWALL

1. Concrete Rings (cast-in-place)

Volume = 489 CY

2. Concrete cell fill

Volume = 3,903 CY

3. Gravel Fill

Volume = 19,117 CY

4. Sheet Piling

Area = 119,089 SF

5. H-Piling

Length = 7,650 LF

B. DOWNSTREAM GUIDEWALL

1. Concrete Rings (cast-in-place)

Volume = 489 CY

2. Concrete cell fill

Volume = 3,903 CY

3. Gravel Fill

Volume = 19,117 CY

4. Sheet Piling

Area = 119,089 SF

5. H-Piling

Length = 7,650 LF

Guidewall Summary

Total Cast-in-Place Concrete	977	CY
Total Concrete Fill	7,806	CY
Total Gravel Fill	38,234	CY
Total Sheet Piling	238,177	SF
Total H-Piling	15,300	LF

LOCK AND DAM NO.13, LOCATION NO.4, TYPE A,
1200' LOCK ALTERNATIVE (PILE FOUNDED)

ACCOUNT CODE	ITEM	QUANTITY	UNIT	UNIT PRICE ($'s)	AMOUNT ($1,000's)
01.	**LANDS AND DAMAGES**				
	REAL ESTATE	1	JOB	SUM	230
04.	**DAMS**				
	DEMOLITION (TAINTER GATE BAY NO.1)	1	JOB	SUM	1,504
	CONCRETE (TIE-IN TO EXISTING LOCK)	362	CY	280.00	101
	MISCELLANEOUS	1	JOB	SUM	150
	REPLACEMENT TAINTER GATE	1	JOB	SUM	25,000
	04 DAMS SUBTOTAL				26,755
05.	**LOCKS**				
	SITEWORK				
	MOBILIZATION	1	JOB	SUM	10,650
	DEMOLITION	1	JOB	SUM	1,910
	EXCAVATION	48,960	CY	6.25	306
	FOUNDATION FILL AT SCOUR HOLE	11,893	CY	18.75	223
	LOCK WALL FILL AND COFFERDAM FILL	330,100	CY	10.00	3,301
	CAPSTONE	52,660	TN	25.00	1,317
	RIPRAP	33,380	TN	20.00	668
	LEVELING STONE IN LOCK FLOOR	4,580	TN	15.00	69
	GRAVEL FILTER IN LOCK FLOOR	16,606	TN	15.00	249
	GEOTEXTILE	13,740	SY	6.00	82
	FOUNDATION/LOCK DEWATERING	1	JOB	SUM	3,000
	MARINE FACILITIES, TEMP. MOORING STR.	1	JOB	SUM	3,900
	CONCRETE				
	STRUCTURAL GROUTING	450	CY	200	90
	CAST IN PLACE REINFORCED CONCRETE	107,900	CY	217	23,414
	CAST IN PLACE CONNECTIONS	964	CY	725	699
	PRECAST CONCRETE	0	CY	400	0
	TREMIE CONCRETE, BASE .	12,736	CY	165	2,101
	PRECAST FLOOR PAVERS AND STRUTS	15,450	CY	286	4,419
	SET PRECAST FLOOR BEAMS	31	EA	16000	496
	SET FLOOR PANELS	62	EA	10000	620
	STEEL REINFORCEMENT	6,474,000	LB	0.75	4,856
	METALS				
	SHEET PILING	643,500	SF	35.80	23,037
	SHEET PILE BRACING	1	JOB	SUM	350
	FOUNDATION PILING AND TESTING	209,190	LF	39.75	8,315
	STRUCTURAL STEEL (GATES, VALVES, ETC.)	1	JOB	SUM	11,613
	STRUCT. STEEL (MISCELLANEOUS - LADDERS, ETC.)	1	JOB	SUM	3,040
	ELECTRICAL				
	ELECTRICAL SYSTEM		JOB	SUM	4,700
	INSTRUMENTATION	1	JOB	SUM	1,250
	MECHANICAL				
	GATE AND VALVE OPERATING MACHINERY	1	JOB	SUM	2,750
	MECHANICAL SYSTEMS	1	JOB	SUM	3,200
	MISCELLANEOUS	1	JOB	SUM	1,950
	05 LOCKS SUBTOTAL				122,575

LOCK AND DAM NO.13, LOCATION NO.4, TYPE A,
1200' LOCK ALTERNATIVE (PILE FOUNDED)

05.60.	**GUIDEWALLS**				
	SITEWORK				
	EXCAVATION	118,490	CY	4.5	533
	BACKFILL	73,640	CY	10	736
	SCOUR PROTECTION	46,350	TON	15	695
	CONCRETE				
	42" DIAMETER PILES	6,360	LF	400	2,544
	CAST IN PLACE REINFORCED CONCRETE	6,207	CY	150	931
	PRECAST BEAMS	17,325	CY	500	8,663
	PRECAST BEAM SEATS	262	CY	1000	262
	TREMIE CONCRETE	1,709	CY	500	855
	PERMANENT CELL FILL (C0NCRETE)	5,709	CY	200	1,142
	GROUT FOR BEAMS	778	CY	1000	778
	STEEL REINFORCEMENT	2,921,700	LB	0.75	2,191
	GRAVEL FILL	19,820	CY	10	198
	METALS				
	SHEET PILING	105,096	SF	25.00	2,627
	FOUNDATION PILING	1	JOB	SUM	318
	POST TENSIONING	2,030	LF	30	61
	STRUCTURAL STEEL	1	JOB	SUM	4,060
	05.60 GUIDEWALLS SUBTOTAL				26,594
09.	**CHANNEL WORK**	1	JOB	SUM	1,009
	PROJECT SUBTOTAL				177,164
	CONTINGENCIES 25%				44,291
	PROJECT SUBTOTAL WITH CONTINGENCIES				221,454
30.	**PLANNING, ENGINEERING, AND DESIGN (10%)**				22,000
31.	**CONSTRUCTION MANAGEMENT (10%)**				22,000
	PROJECT TOTAL				$ 265,000

LOCK AND DAM NO.13, LOCATION 4, TYPE A
1200'LOCK ALTERNATIVE (PILE FOUNDED)

Subject	PILE FOUNDED LOCKS: L/D 13 Location 4 Quantities for Type A Lock, Crane-In Construction	Date Sep 96
Computed by Michael Cummings	Checked	Sheet 1 of 6

Gate Monolith

Note: For quantities change the RED values in the cells of the dimensioned cross section shown.

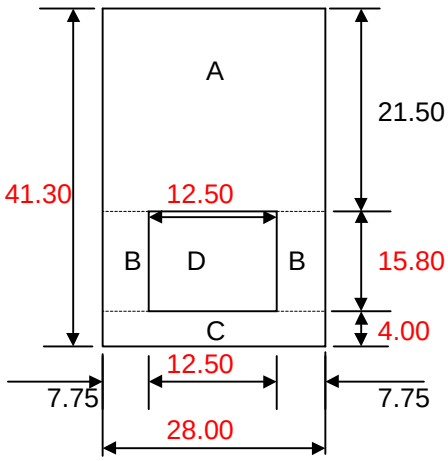

Cast in place concrete

A_g =	602.0	ft^2	
B_g =	244.9	ft^2	
C_g =	112.0	ft^2	
D_g =	197.5	ft^2	CULVERT
Total =	958.9	ft^2	

Tremie concrete (below "C")

132.0 ft^2

hght chk = 41.30 left
hght chk = 41.30 right

US lngth = 265.0 ft DS lngth = 240.0 ft

Lock Wall
typical

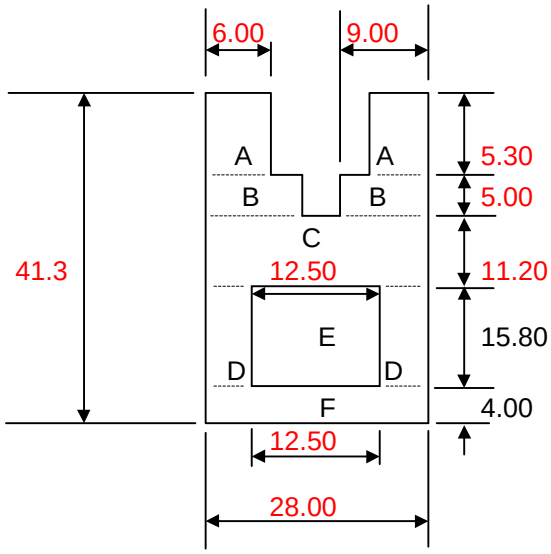

Cast in place concrete

A_w =	63.60	ft^2	
B_w =	90.00	ft^2	
C_w =	313.60	ft^2	
D_w =	244.90	ft^2	
E_w =	197.50	ft^2	CULVERT
F_w =	112.00	ft^2	
Total =	824.10	ft^2	

Tremie concrete (below "F")

132.0 ft^2

hght chk = 41.30 left
hght chk = 41.30 right

RS Wall = 1,050.0 ft LS Wall = 1,050.0 ft

LOCK AND DAM NO.13, LOCATION 4, TYPE A
1200'LOCK ALTERNATIVE (PILE FOUNDED)

Subject		Date
L/D 13 Location 4 Quantities for Type A Lock, Crane-In Construction		Sep 96
Computed by Michael Cummings	Checked	Sheet 2 of 6

Typical cell for cofferdam

Area = 1,736.0 ft^2

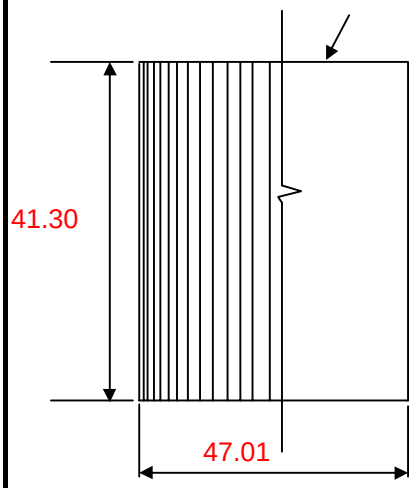

Pile type: PS31
Choose PSA23, PS27.5, or PS31

Area between cells:

Area =	773.0	ft^2
Distance =	15.28	ft
Length =	1.64	ft
Number in cell =	90	piles
No. in space =	20	piles
US Length =	2,650.0	ft
DS Length =	2,650.0	ft

LOCK CHAMBER WALLS:

A. WALL MONOLITHS

1. River side walls

(a) Cast in place concrete

Volume = 32,048.3 CY

(b) Precast concrete

Volume = .0 CY

1. Land side walls

(a) Cast in place concrete

Volume = 32,048.3 CY

(b) Precast concrete

Volume = .0 CY

B. GATE MONOLITHS

1. Upstream cast in place concrete

Volume = 18,822.9 CY

2. Upstream precast concrete

Volume = .0 CY

1. Downstream cast in place concrete

Volume = 17,047.1 CY

2. Downstream precast concrete

Volume = .0 CY

LOCK AND DAM NO.13, LOCATION 4, TYPE A
1200'LOCK ALTERNATIVE (PILE FOUNDED)

Subject		Date
L/D 13 Location 4 Quantities for Type A Lock, Crane-In Construcion		Sep 96
Computed by Michael Cummings	Checked	Sheet 3 of 6

COFFERDAMS:

1. Cofferdam #1, Upstream

Number = 43.0 cells

Total = 9,460.0 piles

2. Cofferdam #2, Upstream

Number = 43.0 cells

Total = 330,054.0 CY fill volume

SILLS:

Length = 120.0 ft
Width = 111.0 ft
Height = 8.0 ft

Volume = 7,893.3 CY

SUMMARY:

CONCRETE (Cast in place)

A.	Lockwalls =	64,096.7 CY
B.	Gate monoliths =	35,870.0 CY
C.	Sills =	7,893.3 CY
D.	Tremie =	12,735.6 CY
	Total =	107,900.0 CY

PRECAST CONCRETE

A.	Lockwalls =	.0 CY
B.	Gate monoliths =	.0 CY
	Total =	.0 CY

SHEETPILES

A.	Required number for cofferdams =	9,460.0 piles
B.	Required number for walls =	0 piles
	Total =	9,500.0 piles
	Total =	643,500.0 SF of piling

FILL

A.	Required fill for cofferdams =	330,054.0 CY
	Total =	330,100.0 CY

LOCK AND DAM NO.13, LOCATION 4, TYPE A
1200'LOCK ALTERNATIVE (PILE FOUNDED)

Subject		Date
L/D 13 Location 4 Quantities for Type B Lock, Crane-In Construcion		Sep 96
Computed by Michael Cummings	Checked	Sheet 4 of 6

Upstream Guidewall Cell, Small

(typical)

Area = 700.0 SF

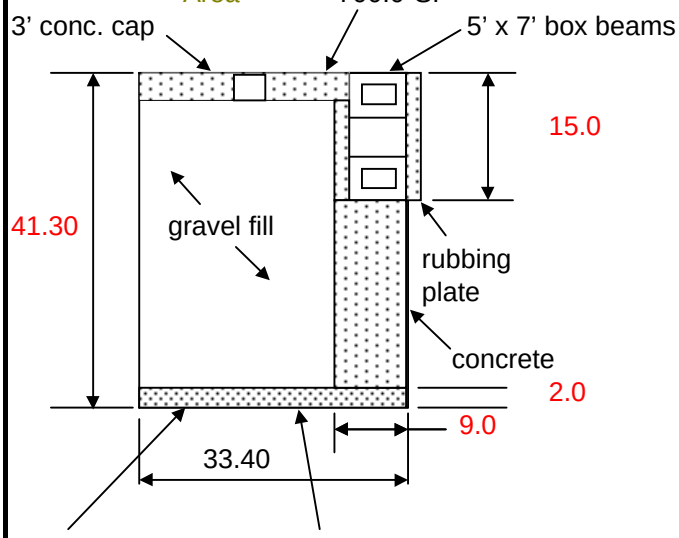

Area = 876.0 SF

Note: For quantities change the RED values in the cells of the dimensioned cross section shown.

Cast-in-Place Concrete

3' conc. cap	=	77	CY
concrete	=	197	CY
Total	=	274	CY
for 7 cells	=	1,916	CY
Tremie concrete	=	65	CY
for 7 cells	=	455	CY

Precast Concrete

5'x7' beam	=	889	CY
rubbing pl.	=	500	CY
Total	=	1,389	CY
Gravel fill	=	944	CY
for 7 cells	=	6,607	CY
Sheet Piling	=	4,334	SF
for 7 cells	=	30,335	SF

Upstream Guidewall Cell, Large

(typical)

Area = 2,124.0 SF

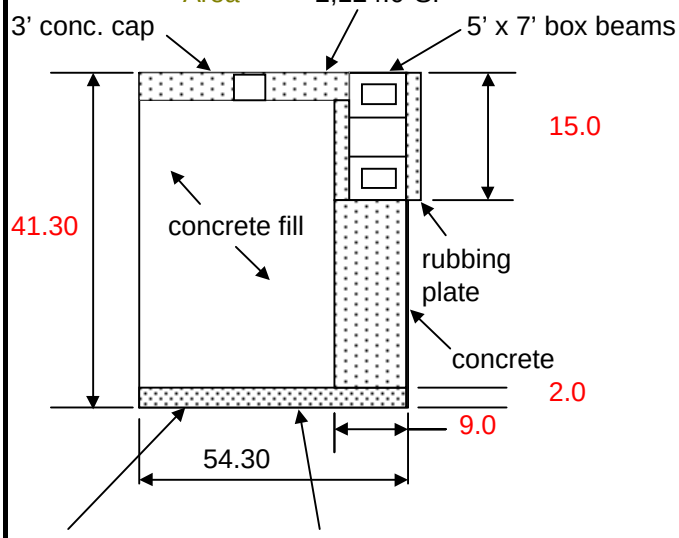

Area = 2,316.0 SF

Note: For quantities change the RED values in the cells of the dimensioned cross section shown.

Cast-in-Place Concrete

3' conc. cap	=	235	CY
concrete	=	252	CY
Total	=	487	CY
Tremie concrete	=	172	CY
Permanent Cell Fill		2,854	CY
Sheet Piling	=	7,045	SF

LOCK AND DAM NO.13, LOCATION 4, TYPE A
1200'LOCK ALTERNATIVE (PILE FOUNDED)

Subject		Date
L/D 13 Location 4 Quantities for Type B Lock, Crane-In Construcion		Sep 96
Computed by Michael Cummings	Checked	Sheet 5 of 6

Downstream Guidewall Cell, Small

(typical)

Area = 700.0 SF

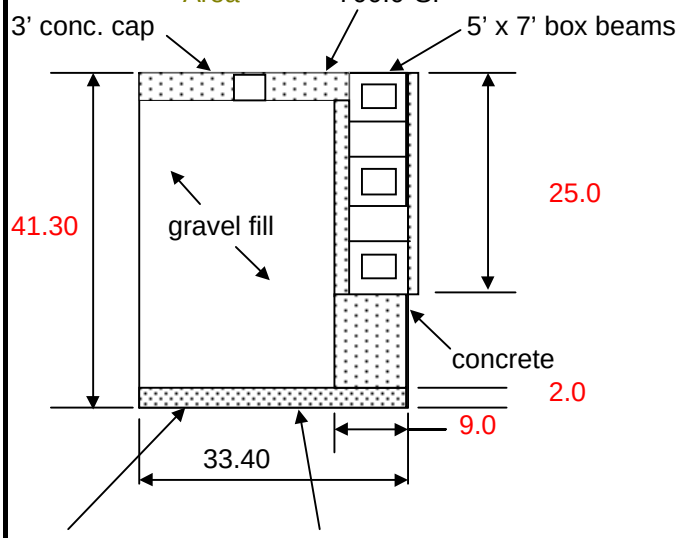

Area = 876.0 SF

Note: For quantities change the RED values in the cells of the dimensioned cross section shown.

Cast-in-Place Concrete			
3' conc. cap	=	77	CY
concrete	=	149	CY
Total	=	225	CY
for 14 cells	=	3,156	CY
Tremie concrete	=	65	CY
for 14 cells	=	910	CY
Precast Concrete			
5'x7' beam	=	2,667	CY
rubbing pl.	=	1,667	CY
Total	=	4,333	CY
Gravel fill	=	944	CY
for 14 cells	=	13,213	CY
Sheet Piling	=	4,334	SF
for 14 cells	=	60,670	SF

Downstream Guidewall Cell, Large

(typical)

Area = 2,124.0 SF

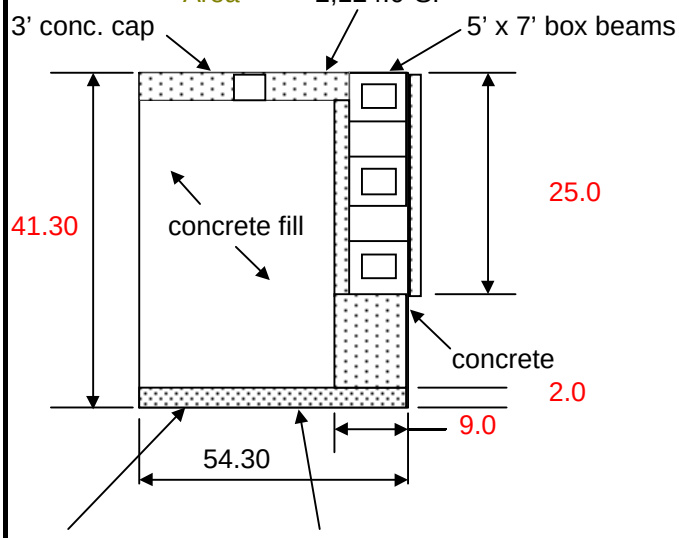

Area = 2,316.0 SF

Note: For quantities change the RED values in the cells of the dimensioned cross section shown.

Cast-in-Place Concrete			
3' conc. cap	=	235	CY
concrete	=	413	CY
Total	=	648	CY
Tremie concrete	=	172	CY
Permanent Cell Fill		2,854	CY
Sheet Piling	=	7,045	SF

LOCK AND DAM NO.13, LOCATION 4, TYPE A
1200'LOCK ALTERNATIVE (PILE FOUNDED)

Subject		Date
L/D 13 Location 4 Quantities for Type B Lock, Crane-In Construcion		Sep 96
Computed by Michael Cummings	Checked	Sheet 6 of 6

LOCK GUIDEWALLS :

A. UPSTREAM GUIDEWALL

1. Cast-in-place concrete

Volume = 2,403 CY

2. Precast concrete

Volume = 1,389 CY

3. Gravel Fill

Volume = 6,607 CY

4. Sheet Piling

Area = 37,380 SF

5. Permanent Cell Fill

Volume = 2,854 CY

6. Tremie Concrete

Volume = 627 CY

B. DOWNSTREAM GUIDEWALL

1. Cast-in-place concrete

Volume = 3,804 CY

2. Precast concrete

Volume = 4,333 CY

3. Gravel Fill

Volume = 13,213 CY

4. Sheet Piling

Area = 67,715 SF

5. Permanent Cell Fill

Volume = 2,854 CY

6. Tremie Concrete

Volume = 1,082 CY

Guidewall Summary

Total Cast-in-Place Concrete	6,207	CY
Total Precast Concrete	5,722	CY
Total Gravel Fill	19,820	CY
Total Sheet Piling	105,096	SF
Total Permanent Cell Fill	5,709	CY
Total Tremie Concrete	1,709	CY

LOCK AND DAM NO.13, LOCATION 4, TYPE B,
1200' LOCK ALTERNATIVE (PILE FOUNDED)

ACCOUNT CODE	ITEM	QUANTITY	UNIT	UNIT PRICE ($'s)	AMOUNT ($1,000's)
01.	**LANDS AND DAMAGES**				
	REAL ESTATE	1	JOB	SUM	200
04.	**DAMS**				
	DEMOLITION (TAINTER GATE BAY NO.1)	1	JOB	SUM	1,504
	REPLACEMENT TAINTER GATE	1	JOB	SUM	25,000
	04 DAMS SUBTOTAL				26,504
05.	**LOCKS**				
	SITEWORK				
	MOBILIZATION	1	JOB	SUM	8,000
	DEMOLITION	1	JOB	SUM	1,910
	EXCAVATION	117,700	CY	4.50	530
	BACKFILL	160,000	CY	6.25	1,000
	CAPSTONE	52,660	TN	25.00	1,317
	SCOUR PROTECTION	1	JOB	SUM	2,300
	RIPRAP	143,700	TN	20.00	2,874
	STONE FILL	16,606	TN	15.00	249
	GEOTEXTILE	13,740	SY	6.00	82
	FOUNDATION/LOCK DEWATERING	1	JOB	SUM	3,000
	COFFERDAM REMOVAL	1	JOB	SUM	81
	MARINE FACILITIES, TEMP. MOORING STR.	1	JOB	SUM	3,900
	CONCRETE				
	STRUCTURAL GROUTING	1	JOB	SUM	5,400
	CAST IN PLACE REINFORCED CONCRETE	43,700	CY	217	9,483
	CAST IN PLACE CONNECTIONS	964	CY	725	699
	PRECAST CONCRETE LOCK FLOOR	8,600	CY	400	3,440
	PRECAST CONCRETE CHAMBER AND APPROACH WALL	7,600	CY	400	3,040
	TREMIE CONCRETE, BASE	20,300	CY	165	3,350
	TREMIE CONCRETE, WALLS	46,900	CY	165	7,739
	FURNISH AND SET LANDING PADS	24	EA	19000	456
	SET PRECAST WALL UNITS	88	EA	16000	1,408
	FLOAT IN AND SET FLOOR UNITS	11	EA	40000	440
	STEEL REINFORCEMENT	5,462,500	LB	0.75	4,097
	STEEL CULVERT PIPE	5,278,500	LB	0.65	3,431
	METALS				
	SHEET PILING	1	JOB	SUM	6,400
	SHEET PILE BRACING	1	JOB	SUM	600
	FOUNDATION PILING AND TESTING	1	JOB	SUM	15,000
	STRUCTURAL STEEL (GATES, VALVES, ETC.)	1	JOB	SUM	11,600
	STRUCT. STEEL (MISCELLANEOUS - LADDERS, ETC.)	1	JOB	SUM	3,000
	ELECTRICAL				
	ELECTRICAL SYSTEM		JOB	SUM	4,700
	INSTRUMENTATION	1	JOB	SUM	1,250
	MECHANICAL				
	GATE AND VALVE OPERATING MACHINERY	1	JOB	SUM	2,750
	MECHANICAL SYSTEMS	1	JOB	SUM	3,200
	MISCELLANEOUS	1	JOB	SUM	1,950
	05 LOCKS SUBTOTAL				118,675

LOCK AND DAM NO.13, LOCATION 4, TYPE B,
1200' LOCK ALTERNATIVE (PILE FOUNDED)

05.60.	**GUIDEWALLS**				
	SITEWORK				
	EXCAVATION	118,490	CY	4.5	533
	BACKFILL	73,640	CY	10	736
	SCOUR PROTECTION	211,130	TON	15	3,167
	CONCRETE				
	42" DIAMETER PILES	6,360	LF	400	2,544
	CAST IN PLACE REINFORCED CONCRETE	12,070	CY	150	1,810
	PRECAST BEAMS	17,325	CY	500	8,663
	PRECAST BEAM SEATS	262	CY	1000	262
	TREMIE CONCRETE	1,709	CY	500	855
	PERMANENT CELL FILL (C0NCRETE)	11,260	CY	200	2,252
	GROUT FOR BEAMS	778	CY	1000	778
	STEEL REINFORCEMENT	2,921,700	LB	0.75	2,191
	GRAVEL FILL	39,094	CY	10	391
	METALS				
	SHEET PILING	194,923	SF	25.00	4,873
	FOUNDATION PILING	1	JOB	SUM	318
	POST TENSIONING	2,030	LF	30	61
	STRUCTURAL STEEL	1	JOB	SUM	4,060
	05.60 GUIDEWALLS SUBTOTAL				33,494
09.	**CHANNEL WORK**	1	JOB	SUM	2,974
	PROJECT SUBTOTAL				181,847
	CONTINGENCIES 25%				45,462
	PROJECT SUBTOTAL WITH CONTINGENCIES				227,308
30.	**PLANNING, ENGINEERING, AND DESIGN (10%)**				23,000
31.	**CONSTRUCTION MANAGEMENT (10%)**				23,000
	PROJECT TOTAL				$ 273,000

LOCK AND DAM NO.13, LOCATION 4, TYPE B,
1200' LOCK ALTERNATIVE (PILE FOUNDED)

Subject	PILE FOUNDED LOCKS: 1200 ft lock L/D 13 Location 4 Quantities for Type B Lock	Date OCT 1996
Computed by Michael Cummings	Checked	Sheet 1 of 7

Gate Monolith
(typical)

Note: For quantities change the RED values in the cells of the dimensioned cross section shown.

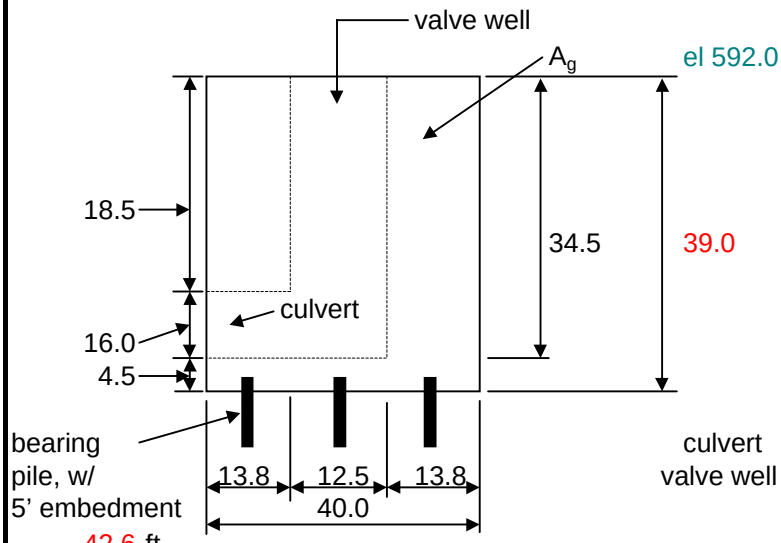

Cast in place concrete

A_g =	15,358.5	CY	U.S.
A_g =	18,536.3	CY	D.S.
Total =	33,894.8	CY	

The culverts are subtracted gross volume

	width	length	heighth	
culvert =	12.5	16.0	50.0	CF
valve well =	12.5	16.0	13.8	CF

US gates length = 137.0 ft DS gates length = 164.5 ft

hght chk =	39.00	left
hght chk =	39.00	right

Lock Wall
(typical)

Note: For quantities change the RED values in the cells of the dimensioned cross section

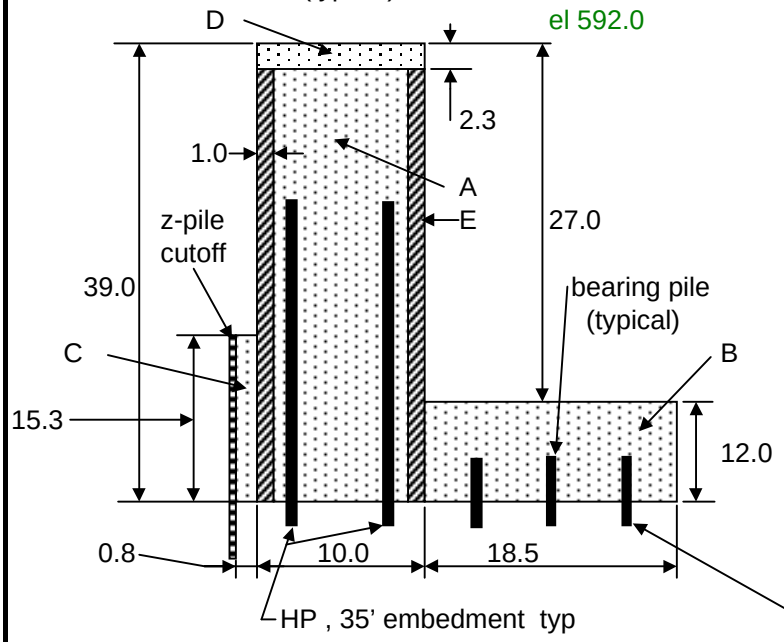

Tremie concrete / CIP

A =	293.6	SF
B =	222.0	SF
C =	11.5	SF

Cast in place

D =	23.0	SF

Pre-cast

E =	73.4	SF
Total =		SF

HP reinforcing ratio = 0.960 HP/ft

Total HP walls = 2,088.0 ea

Total bearing pile = 13,050.0 ea
assume 3' spacing

72.6 ft total length 42.6 ft

RS Wall = 1,087.5 ft LS Wall = 1,087.5 ft

hght chk =	39.00	left
hght chk =	39.00	right

L134bp

LOCK AND DAM NO.13, LOCATION 4, TYPE B,
1200' LOCK ALTERNATIVE (PILE FOUNDED)

Subject	PILE FOUNDED LOCKS: 1200 ft lock L/D 13 Location 4 Quantities for Type B Lock	Date OCT 1996
Computed by Michael Cummings	Checked	Sheet 2 of 7

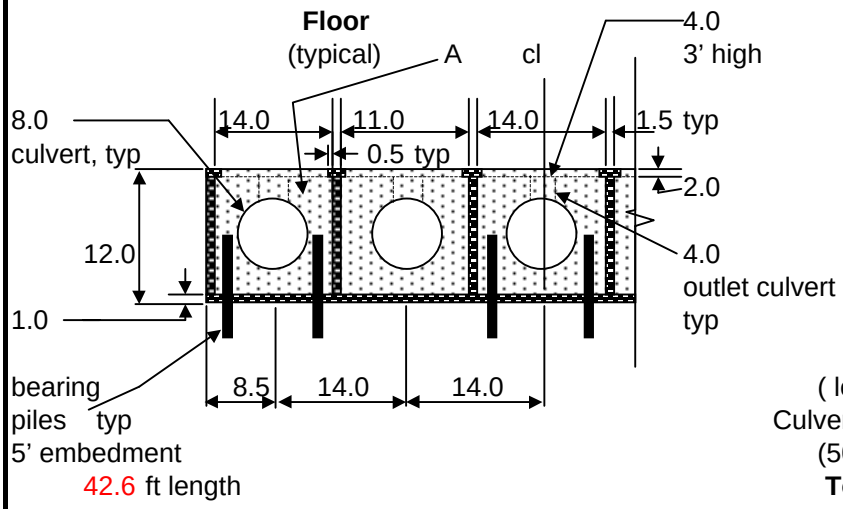

Tremie concrete
A = 442.7 SF
Pre-cast
B = 182.0 SF

Total = 624.7 SF

Piles: 6 rows = 7,620.0 piles
(length not determined)
Culvert fill/empty area = 11.31 CF/ft
(50 ft section from plate P4B2)
Total tremie conc = 20,290.0 CY

Total pre-cast = 8,560.7 CY

Length of floor = 1,270.0 ft width of floor = 73.0 ft

Impact cell
typical
Area = 2,827.0 ft^2

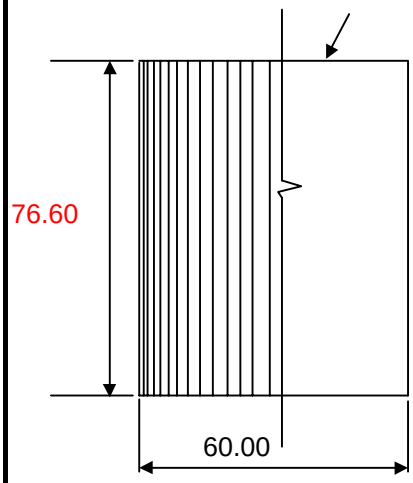

Note: For quantities change the RED values in the cells of the dimensioned cross section shown.

Pile type: PS31
Choose PSA23, PS27.5, or PS31

Area between cells:
Area = 1,127.0 SF

Length = 1.641 ft
Number in cell = 115 piles

US number = 1.0 cells and spaces between cells
DS number = 1.0 cells and spaces between cells

US Wall = 994.0 ft DS Wall = 1,016.0 ft

LOCK AND DAM NO.13, LOCATION 4, TYPE B,
1200' LOCK ALTERNATIVE (PILE FOUNDED)

Subject	PILE FOUNDED LOCKS: 1200 ft lock L/D 13 Location 4 Quantities for Type B Lock	Date OCT 1996
Computed by Michael Cummings	Checked	Sheet 3 of 7

cofferdam cell
typical
Area = 1,963.0 ft^2

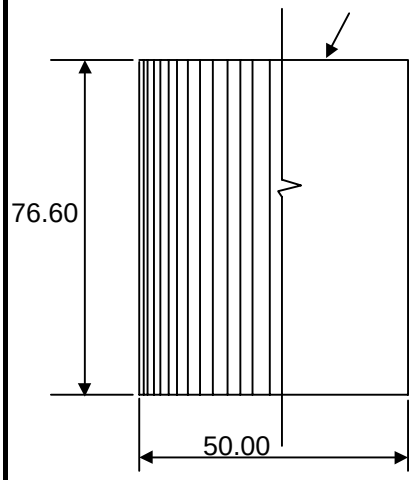

Note: For quantities change the RED values in the cells of the dimensioned cross section shown.

Pile type: PS31
Choose PSA23, PS27.5, or PS31

Area between cells:

Area =	855.0	SF
Distance =	15.91	ft
Length =	1.641	ft
Number in cell =	96	piles
No. in space =	21	piles

UPSTREAM

North or South length:	264.0	.4	modular numbers
East or West length:	330.0	.5	to aid in value search

DOWNSTREAM

North or South length:	264.0	.4	modular numbers
East or West length:	330.0	.5	to aid in value search

US	Total number of cells:	9.0	DS	Total number of cells:	9.0
US	Total number of cells:	11.0	DS	Total number of cells:	11.0

LOCK CHAMBER WALLS:

A. WALL MONOLITHS

1. River side walls
(a) Cast in place concrete
Volume = 926.4 CY
(b) Tremie concrete
Volume = 21,229.4 CY
(c) Pre-cast concrete
Volume = 3,207.7 CY
(d) Pre-cast concrete (approach wall)
Volume = 758.1 CY
(e) Tremie concrete (approach wall)
Volume = 2,969.8 CY

1. Land side walls
(a) Cast in place concrete
Volume = 926.4 CY
(b) Tremie concrete
Volume = 21,229.4 CY
(c) Pre-cast concrete
Volume = 3,207.7 CY
(d) Pre-cast concrete (approach wall)
Volume = 383.5 CY
(e) Tremie concrete (approach wall)
Volume = 1,502.2 CY

B. GATE MONOLITHS

1. Upstream cast in place concrete
Volume = 15,358.5 CY
Piles = 2600 LF

1. Downstream cast in place concrete
Volume = 18,536.3 CY
Piles = 3000 LF

IMPACT CELLS

Total = 230.0 piles
Total = 17,618.0 SF of piling

Total = 16,041.0 CY fill volume

LOCK AND DAM NO.13, LOCATION 4, TYPE B,
1200' LOCK ALTERNATIVE (PILE FOUNDED)

Subject	PILE FOUNDED LOCKS: 1200 ft lock L/D 13 Location 4 Quantities for Type B Lock	Date OCT 1996
Computed by Michael Cummings	Checked	Sheet 4 of 7

SILLS:

Length = 120.0 ft **Volume =** 7,893.0 CY of CIP concrete
111.0 ft
8.0 ft

COFFERDAM CELLS:

Upstream riverside
Total = 2,340.0 piles
Total = 294,139.0 SF of piling

Downstream riverside
Total = 2,340.0 piles
Total = 294,139.0 SF of piling

SUMMARY:

Lockwalls:

CONCRETE (Precast)
A. Lockwalls = 6,415.4 CY
B. Approach walls = 1,141.5 CY **Total =** 7,600.0 CY

CONCRETE (CIP, Cast in place)
A. Lockwalls = 1,852.8 CY
B. Gate mono's = 33,894.8 CY
C. Sills = 7,893.0 CY **Total =** 43,700.0 CY

CONCRETE (Tremie)
A. Lockwalls = 42,458.8
B. Approach walls = 4,472.0 **Total =** 46,900.0 CY

HP PILING **Total =** 75,800.0 LF
BEARING PILES:
Total = 98,300.0 LF

Lock Floor:

CONCRETE:
A. Tremie concrete = 20,300.0 CY
B. Precast = 8,600.0 CY
BEARING PILES:
Total = 108,300.0 LF

Impact cells:

A. SHEETPILES
1. Required number for impact cells = 230.0 piles
Total = 300.0 piles **Total =** 37,800.0 SF of piling

2. Required number for seepage cutoff
Total = .0 SF

B. FILL
1. Required fill for cofferdams = #REF! CY
Total = #REF! CY includes losses from compaction, etc

Cofferdam sheet piling

A. SHEETPILE, up and down stream
Total = 4,700.0 piles **Total =** 588,300.0 SF

LOCK AND DAM NO.13, LOCATION 4, TYPE B,
1200' LOCK ALTERNATIVE (PILE FOUNDED)

Subject	PILE FOUNDED LOCKS: L/D 13 Location 4 Quantities for Type B Lock, Crane-In Construcion	Date OCT 1996
Computed by Michael Cummings	Checked	Sheet 5 of 7

Upstream Guidewall Cell, Small

(typical)

Area = 700.0 SF

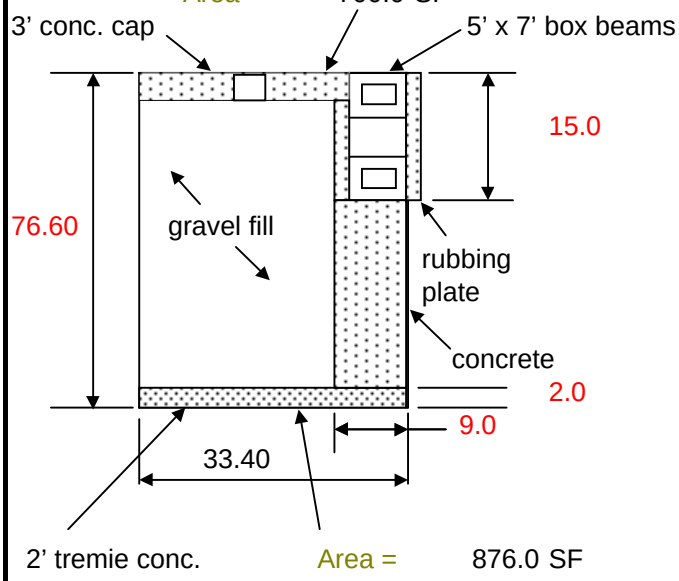

Area = 876.0 SF

Note: For quantities change the RED values in the cells of the dimensioned cross section shown.

Cast-in-Place Concrete			
3' conc. cap	=	77	CY
concrete	=	445	CY
Total	=	522	CY
for 7 cells	=	3,652	CY
Tremie concrete	=	65	CY
for 7 cells	=	455	CY
Precast Concrete			
5'x7' beam	=	889	CY
rubbing pl.	=	500	CY
Total	=	1,389	CY
Gravel fill	=	1,862	CY
for 7 cells	=	13,031	CY
Sheet Piling	=	8,038	SF
for 7 cells	=	56,263	SF

Upstream Guidewall Cell, Large

(typical)

Area = 2,124.0 SF

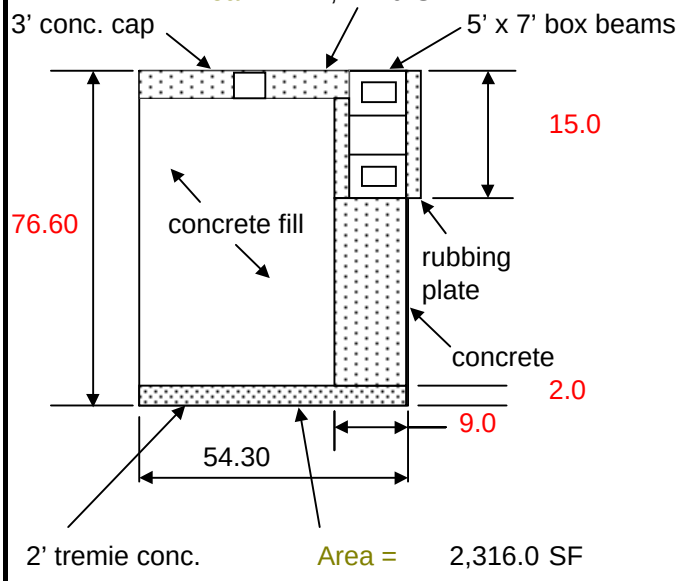

Area = 2,316.0 SF

Note: For quantities change the RED values in the cells of the dimensioned cross section shown.

Cast-in-Place Concrete			
3' conc. cap	=	235	CY
concrete	=	579	CY
Total	=	814	CY
Tremie concrete	=	172	CY
Permanent Cell Fill		5,630	CY
Sheet Piling	=	13,067	SF

LOCK AND DAM NO.13, LOCATION 4, TYPE B,
1200' LOCK ALTERNATIVE (PILE FOUNDED)

Subject	PILE FOUNDED LOCKS: L/D 13 Location 4 Quantities for Type B Lock, Crane-In Construcion	Date OCT 1996
Computed by Michael Cummings	Checked	Sheet 6 of 7

Downstream Guidewall Cell, Small

(typical)

Area = 700.0 SF

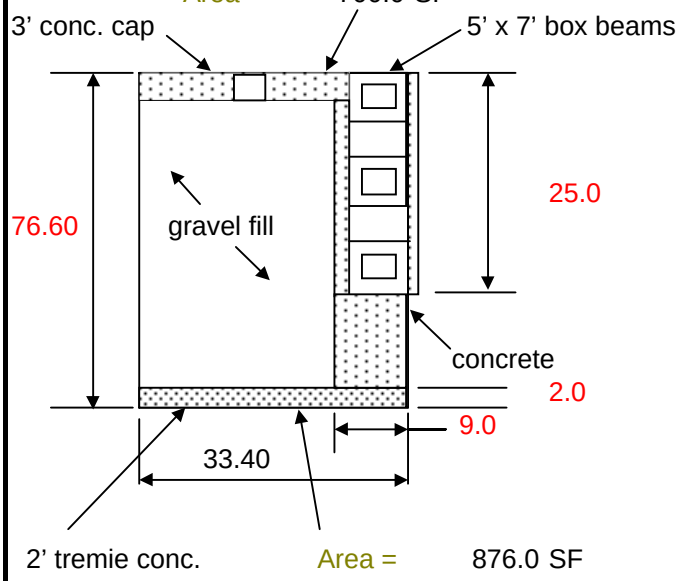

Area = 876.0 SF

Note: For quantities change the RED values in the cells of the dimensioned cross section shown.

Cast-in-Place Concrete			
3' conc. cap	=	77	CY
concrete	=	397	CY
Total	=	473	CY
for 14 cells	=	6,628	CY
Tremie concrete	=	65	CY
for 14 cells	=	910	CY
Precast Concrete			
5'x7' beam	=	2,667	CY
rubbing pl.	=	1,667	CY
Total	=	4,333	CY
Gravel fill	=	1,862	CY
for 14 cells	=	26,062	CY
Sheet Piling	=	8,038	SF
for 14 cells	=	112,526	SF

Downstream Guidewall Cell, Large

(typical)

Area = 2,124.0 SF

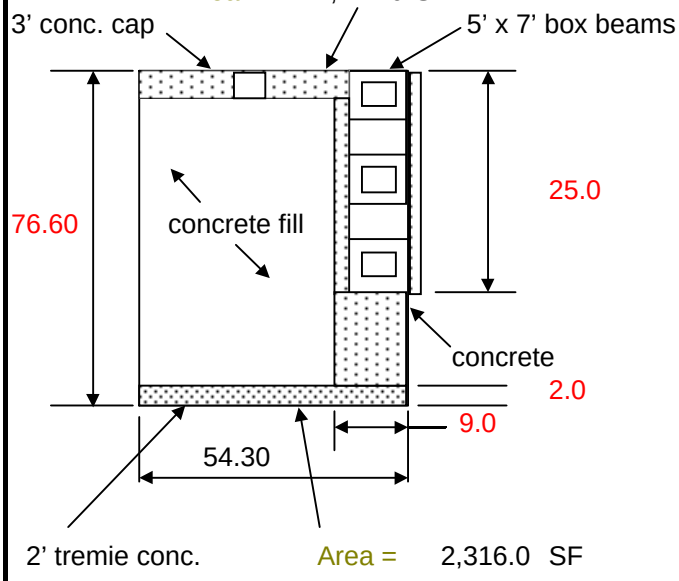

Area = 2,316.0 SF

Note: For quantities change the RED values in the cells of the dimensioned cross section shown.

Cast-in-Place Concrete			
3' conc. cap	=	235	CY
concrete	=	740	CY
Total	=	975	CY
Tremie concrete	=	172	CY
Permanent Cell Fill		5,630	CY
Sheet Piling	=	13,067	SF

LOCK AND DAM NO.13, LOCATION 4, TYPE B,
1200' LOCK ALTERNATIVE (PILE FOUNDED)

Subject	PILE FOUNDED LOCKS: L/D 13 Location 4 Quantities for Type B Lock, Crane-In Construcion	Date OCT 1996
Computed by Michael Cummings	Checked	Sheet 7 of 7

LOCK GUIDEWALLS :

A. UPSTREAM GUIDEWALL

1. Cast-in-place concrete

Volume = 4,466 CY

2. Precast concrete

Volume = 1,389 CY

3. Gravel Fill

Volume = 13,031 CY

4. Sheet Piling

Area = 69,330 SF

5. Permanent Cell Fill

Volume = 5,630 CY

6. Tremie Concrete

Volume = 627 CY

B. DOWNSTREAM GUIDEWALL

1. Cast-in-place concrete

Volume = 7,603 CY

2. Precast concrete

Volume = 4,333 CY

3. Gravel Fill

Volume = 26,062 CY

4. Sheet Piling

Area = 125,593 SF

5. Permanent Cell Fill

Volume = 5,630 CY

6. Tremie Concrete

Volume = 1,082 CY

Guidewall Summary

Total Cast-in-Place Concrete	12,070	CY
Total Precast Concrete	5,722	CY
Total Gravel Fill	39,094	CY
Total Sheet Piling	194,923	SF
Total Permanent Cell Fill	11,260	CY
Total Tremie Concrete	1,709	CY

LOCK AND DAM NO.13, LOCATION 4, TYPE C,
1200' LOCK ALTERNATIVE (PILE FOUNDED)

ACCOUNT CODE	ITEM	QUANTITY	UNIT	UNIT PRICE ($'s)	AMOUNT ($1,000's)
01.	**LANDS AND DAMAGES**				
	REAL ESTATE	1	JOB	SUM	230
04.	**DAMS**				
	DEMOLITION (TAINTER GATE BAY NO.1)	1	JOB	SUM	1,504
	REPLACEMENT TAINTER GATE	1	JOB	SUM	25,000
	04 DAMS SUBTOTAL				26,504
05.	**LOCKS**				
	SITEWORK				
	MOBILIZATION	1	JOB	SUM	8,000
	DEMOLITION	1	JOB	SUM	1,910
	EXCAVATION	117,700	CY	4.50	530
	BACKFILL	160,000	CY	6.25	1,000
	CAPSTONE	52,660	TN	25.00	1,317
	SCOUR PROTECTION	1	JOB	SUM	2,300
	RIPRAP	143,700	TN	20.00	2,874
	STONE FILL	16,606	TN	15.00	249
	GEOTEXTILE	13,740	SY	6.00	82
	FOUNDATION/LOCK DEWATERING	1	JOB	SUM	3,000
	COFFERDAM REMOVAL	1	JOB	SUM	81
	MARINE FACILITIES, TEMP. MOORING STR.	1	JOB	SUM	3,900
	CONCRETE				
	STRUCTURAL GROUTING	1	JOB	SUM	5,400
	CAST IN PLACE REINFORCED CONCRETE	41,800	CY	217	9,071
	CAST IN PLACE CONNECTIONS	964	CY	725	699
	PRECAST FLOOR SLABS	3,398	CY	150	510
	PRECAST CONCRETE APPROACH WALLS	1,532	CY	400	613
	PRECAST CULVERTS	4,990	CY	600	2,994
	PRECAST RUB PANELS	54,375	SF	40	2,175
	TREMIE CONCRETE, BASE	19,130	CY	165	3,156
	TREMIE CONCRETE, WALLS	4,527	CY	175	792
	STEEL REINFORCEMENT	5,225,000	LB	0.75	3,919
	CELL FILL, GRAVEL	117,299	CY	10	1,173
	METALS				
	SHEET PILING	452,805	SF	25.00	11,320
	SHEET PILE BRACING	1	JOB	SUM	600
	FOUNDATION PILING AND TESTING	1	JOB	SUM	15,000
	STRUCTURAL STEEL (GATES, VALVES, ETC.)	1	JOB	SUM	11,600
	STRUCT. STEEL (MISCELLANEOUS - LADDERS, ETC.)	1	JOB	SUM	3,000
	ELECTRICAL				
	ELECTRICAL SYSTEM		JOB	SUM	4,700
	INSTRUMENTATION	1	JOB	SUM	1,250
	MECHANICAL				
	GATE AND VALVE OPERATING MACHINERY	1	JOB	SUM	2,750
	MECHANICAL SYSTEMS	1	JOB	SUM	3,200
	MISCELLANEOUS	1	JOB	SUM	1,950
	05 LOCKS SUBTOTAL				111,114

LOCK AND DAM NO.13, LOCATION 4, TYPE C,
1200' LOCK ALTERNATIVE (PILE FOUNDED)

05.60.	**GUIDEWALLS**				
	SITEWORK				
	EXCAVATION	118,490	CY	4.5	533
	BACKFILL	73,640	CY	10	736
	SCOUR PROTECTION	211,130	TON	15	3,167
	CONCRETE				
	42" DIAMETER PILES	6,360	LF	400	2,544
	CAST IN PLACE REINFORCED CONCRETE	5,825	CY	150	874
	PRECAST BEAMS	17,325	CY	500	8,663
	PRECAST BEAM SEATS	262	CY	1000	262
	TREMIE CONCRETE	1,709	CY	500	855
	PERMANENT CELL FILL (C0NCRETE)	5,347	CY	200	1,069
	GROUT FOR BEAMS	778	CY	1000	778
	STEEL REINFORCEMENT	2,921,700	LB	0.75	2,191
	GRAVEL FILL	18,564	CY	10	186
	METALS				
	SHEET PILING	99,243	SF	25.00	2,481
	FOUNDATION PILING	1	JOB	SUM	318
	POST TENSIONING	2,030	LF	30	61
	STRUCTURAL STEEL	1	JOB	SUM	4,060
	05.60 GUIDEWALLS SUBTOTAL				28,778
09.	**CHANNEL WORK**	1	JOB	SUM	1,009
	PROJECT SUBTOTAL				167,635
	CONTINGENCIES 25%				41,909
	PROJECT SUBTOTAL WITH CONTINGENCIES				209,544
30.	**PLANNING, ENGINEERING, AND DESIGN (10%)**				21,000
31.	**CONSTRUCTION MANAGEMENT (10%)**				21,000
	PROJECT TOTAL				$ 252,000

LOCK AND DAM NO.13, LOCATION 4, TYPE C,
1200' LOCK ALTERNATIVE (PILE FOUNDED)

Subject	PILE FOUNDED LOCKS: 1200 ft lock L/D 13 Location 4 Quantities for Type C Lock	Date OCT 1996
Computed by Michael Cummings	Checked	Sheet 1 of 7

Gate Monolith
(typical)

Note: For quantities change the RED values in the cells of the dimensioned cross section shown.

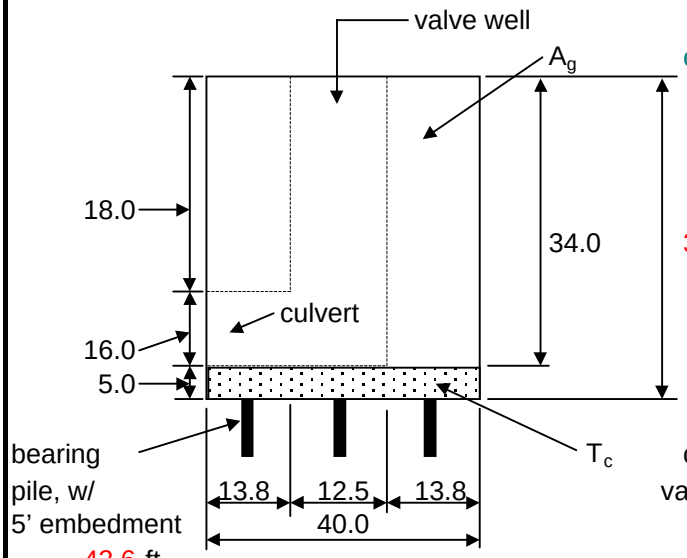

Cast in place concrete

A_g =	15,358.5	CY	U.S.
A_g =	18,536.3	CY	D.S.
Total =	33,894.8	CY	

Tremie concrete

T_c = 10,203.7 CY

The culverts are subtracted gross volume

	width	length	heighth	
culvert =	12.5	16.0	50.0	CF
valve well =	12.5	16.0	13.8	CF

US gates length = 137.0 ft DS gates length = 164.5 ft

hght chk =	39.00	left
hght chk =	39.00	right

Lock Wall

Note: For quantities change the RED values in the cells of the dimensioned cross section

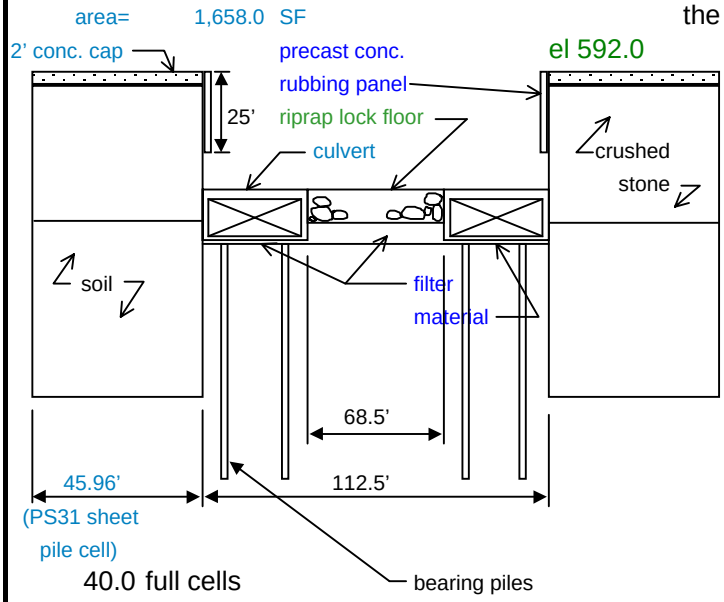

40.0 full cells
4.0 half cells
42.0 filler cells

Cast-in-place concrete
2' concrete cap
Volume= 1,706.2 CY
Pre-cast concrete
precast rubbing panel
Area= 54,350.0 SF
Sheet pile cells
sheet piling
Area= 452,805.2 SF
Sheet pile cell fill
gravel
Volume= 117,299 CY

72.6 ft total length 42.6 ft

RS Wall = 1,087.5 ft LS Wall = 1,087.5 ft

hght chk =	.00	left
hght chk =	.00	right

LOCK AND DAM NO.13, LOCATION 4, TYPE C,
1200' LOCK ALTERNATIVE (PILE FOUNDED)

Subject	PILE FOUNDED LOCKS: 1200 ft lock L/D 13 Location 4 Quantities for Type C Lock	Date OCT 1996
Computed by Michael Cummings	Checked	Sheet 2 of 7

Floor

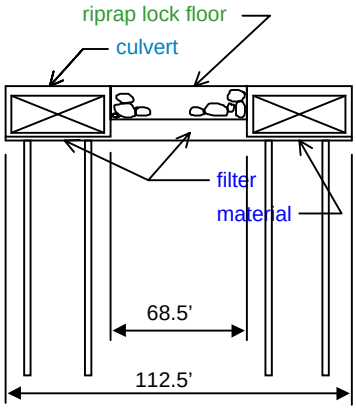

Riprap floor quantity
Volume= 11,956.7 CY
or 16,739.3 TONS

Filter material quantity
Volume= 12,932.1 CY
or 18,105.0 TONS

Bearing piles
precast floor slabs= 1,296.0 LF
precast culvert= 4,896.0 LF
Total Bearing Pile 6,192.0 LF

Length of floor = 1,270.0 ft width of floor = 73.0 ft

Note: For quantities change the RED values in the cells of the dimensioned cross section shown.

US Wall = 994.0 ft DS Wall = 1,016.0 ft

LOCK AND DAM NO.13, LOCATION 4, TYPE C,
1200' LOCK ALTERNATIVE (PILE FOUNDED)

Subject	PILE FOUNDED LOCKS: 1200 ft lock L/D 13 Location 4 Quantities for Type C Lock	Date OCT 1996
Computed by Michael Cummings	Checked	Sheet 3 of 7

cofferdam cell
typical
Area = 1,963.0 ft^2

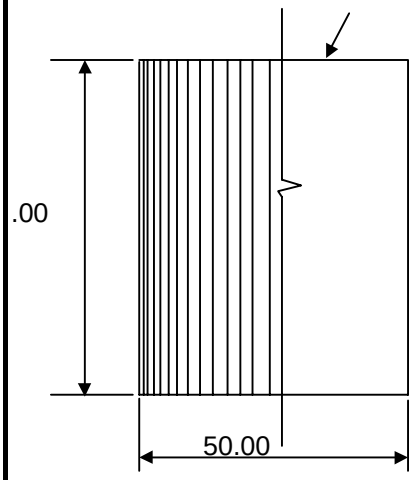

Note: For quantities change the RED values in the cells of the dimensioned cross section shown.

Pile type: PS31
Choose PSA23, PS27.5, or PS31

Area between cells:

Area =	855.0	SF
Distance =	15.91	ft
Length =	1.641	ft
Number in cell =	96	piles
No. in space =	21	piles

UPSTREAM

North or South length:	264.0	.4	modular numbers
East or West length:	330.0	.5	to aid in value search

DOWNSTREAM

North or South length:	264.0	.4	modular numbers
East or West length:	330.0	.5	to aid in value search

US	Total number of cells:	9.0	DS	Total number of cells:	9.0
US	Total number of cells:	11.0	DS	Total number of cells:	11.0

LOCK CHAMBER WALLS:

A. WALL MONOLITHS

1. River side walls
(a) Cast in place concrete
Volume = #REF! CY
(b) Tremie concrete
Volume = ######## CY
(c) Pre-cast concrete
Volume = .0 CY
(d) Pre-cast concrete (approach wall)
Volume = 0.0 CY
(e) Tremie concrete (approach wall)
Volume = - CY

1. Land side walls
(a) Cast in place concrete
Volume = #REF! CY
(b) Tremie concrete
Volume = ######## CY
(c) Pre-cast concrete
Volume = .0 CY
(d) Pre-cast concrete (approach wall)
Volume = 0.0 CY
(e) Tremie concrete (approach wall)
Volume = - CY

B. GATE MONOLITHS

1. Upstream cast in place concrete
Volume = 15,358.5 CY
Piles = 2600 LF

1. Downstream cast in place concrete
Volume = 18,536.3 CY
Piles = 3000 LF

LOCK AND DAM NO.13, LOCATION 4, TYPE C,
1200' LOCK ALTERNATIVE (PILE FOUNDED)

Subject	PILE FOUNDED LOCKS: 1200 ft lock L/D 13 Location 4 Quantities for Type C Lock	Date OCT 1996
Computed by Michael Cummings	Checked	Sheet 4 of 7

SILLS:

Length = 120.0 ft **Volume =** 7,893.0 CY of CIP concrete
111.0 ft
8.0 ft

COFFERDAM CELLS:

Upstream riverside
Total = piles
Total = SF of piling

Downstream riverside
Total = piles
Total = SF of piling

SUMMARY:

Lockwalls:

CONCRETE (Precast)
A. Lockwalls = - CY
B. Approach walls = - CY **Total =** - CY

CONCRETE (CIP, Cast in place)
A. Lockwalls = CY
B. Gate mono's = 33,894.8 CY
C. Sills = 7,893.0 CY **Total =** 41,800.0 CY

CONCRETE (Tremie)
A. Lockwalls = ########
B. Approach walls = - **Total =** ######## CY

HP PILING **Total =** .0 LF

BEARING PILES:
Total = 98,300.0 LF

Lock Floor:

CONCRETE:
A. Tremie concrete = .0 CY
B. Precast = .0 CY

BEARING PILES:
Total = 6,192.0 LF

Lockwall Sheet Pile Cells:

A. SHEETPILES
Total Area = 452,805 SF

B. FILL
Total Volume = 117,299 CY

LOCK AND DAM NO.13, LOCATION 4, TYPE C,
1200' LOCK ALTERNATIVE (PILE FOUNDED)

Subject	PILE FOUNDED LOCKS: L/D 13 Location 4 Quantities for Type C Lock	Date OCT 1996
Computed by Michael Cummings	Checked	Sheet 5 of 7

Upstream Guidewall Cell, Small

(typical)

Area = 700.0 SF

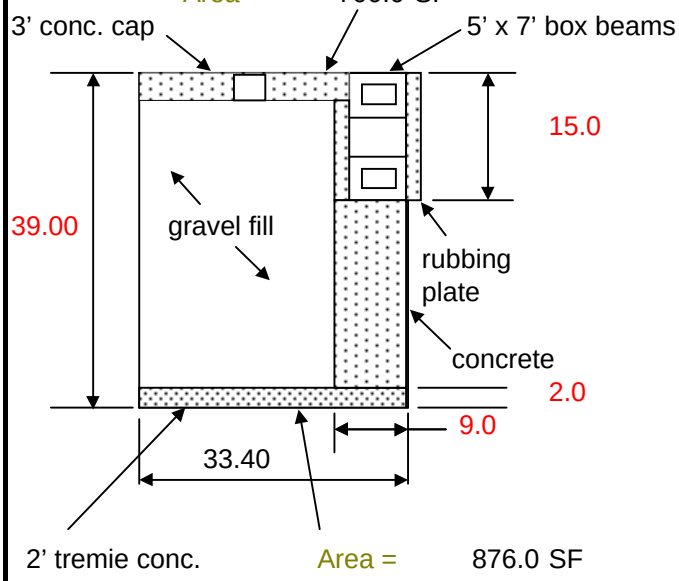

Area = 876.0 SF

Note: For quantities change the RED values in the cells of the dimensioned cross section shown.

Cast-in-Place Concrete			
3' conc. cap	=	77	CY
concrete	=	181	CY
Total	=	258	CY
for 7 cells	=	1,803	CY
Tremie concrete	=	65	CY
for 7 cells	=	455	CY
Precast Concrete			
5'x7' beam	=	889	CY
rubbing pl.	=	500	CY
Total	=	1,389	CY
Gravel fill	=	884	CY
for 7 cells	=	6,188	CY
Sheet Piling	=	4,092	SF
for 7 cells	=	28,646	SF

Upstream Guidewall Cell, Large

(typical)

Area = 2,124.0 SF

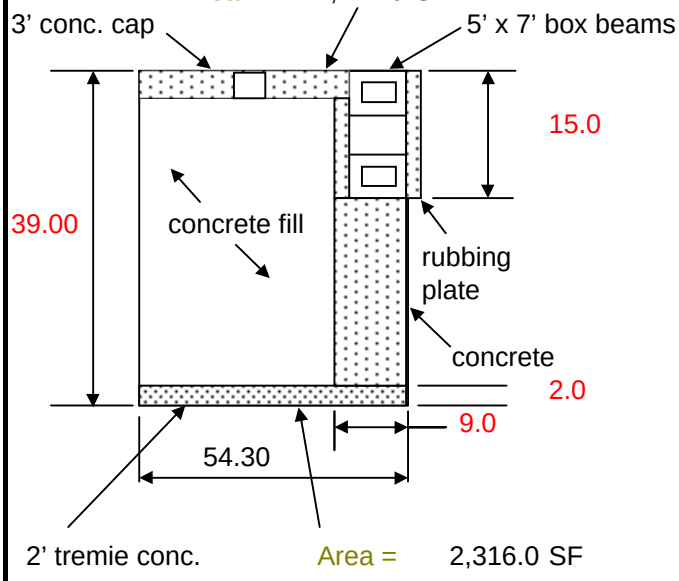

Area = 2,316.0 SF

Note: For quantities change the RED values in the cells of the dimensioned cross section shown.

Cast-in-Place Concrete			
3' conc. cap	=	235	CY
concrete	=	230	CY
Total	=	465	CY
Tremie concrete	=	172	CY
Permanent Cell Fill		2,673	CY
Sheet Piling	=	6,653	SF

LOCK AND DAM NO.13, LOCATION 4, TYPE C,
1200' LOCK ALTERNATIVE (PILE FOUNDED)

Subject	PILE FOUNDED LOCKS: L/D 13 Location 4 Quantities for Type C Lock	Date OCT 1996
Computed by Michael Cummings	Checked	Sheet 6 of 7

Downstream Guidewall Cell, Small

(typical)

Area = 700.0 SF

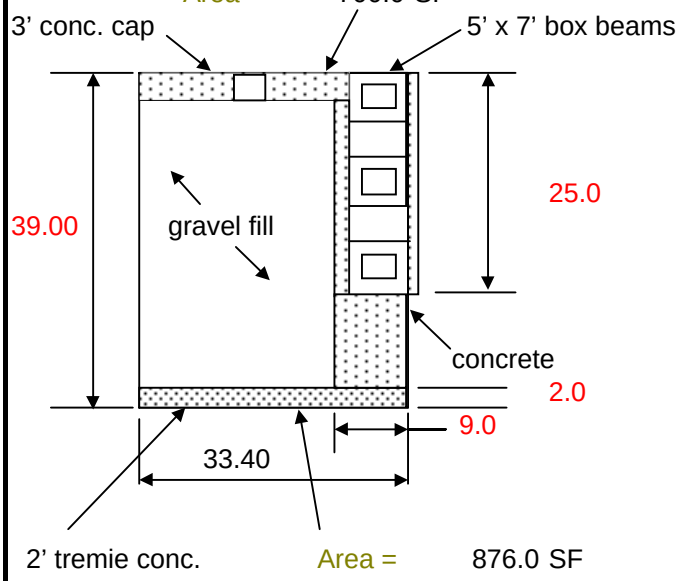

Area = 876.0 SF

Note: For quantities change the RED values in the cells of the dimensioned cross section shown.

Cast-in-Place Concrete			
3' conc. cap	=	77	CY
concrete	=	133	CY
Total	=	209	CY
for 14 cells	=	2,930	CY
Tremie concrete	=	65	CY
for 14 cells	=	910	CY
Precast Concrete			
5'x7' beam	=	2,667	CY
rubbing pl.	=	1,667	CY
Total	=	4,333	CY
Gravel fill	=	884	CY
for 14 cells	=	12,376	CY
Sheet Piling	=	4,092	SF
for 14 cells	=	57,291	SF

Downstream Guidewall Cell, Large

(typical)

Area = 2,124.0 SF

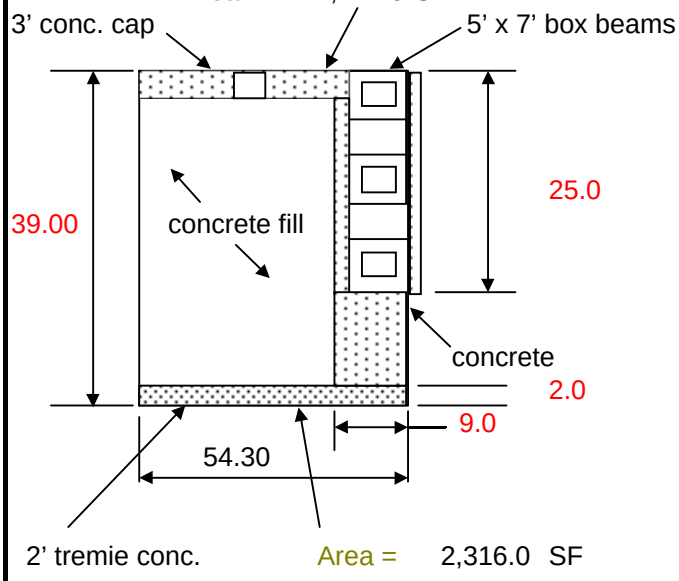

Area = 2,316.0 SF

Note: For quantities change the RED values in the cells of the dimensioned cross section shown.

Cast-in-Place Concrete			
3' conc. cap	=	235	CY
concrete	=	391	CY
Total	=	626	CY
Tremie concrete	=	172	CY
Permanent Cell Fill		2,673	CY
Sheet Piling	=	6,653	SF

LOCK AND DAM NO.13, LOCATION 4, TYPE C,
1200' LOCK ALTERNATIVE (PILE FOUNDED)

Subject	PILE FOUNDED LOCKS: L/D 13 Location 4 Quantities for Type C Lock	Date OCT 1996
Computed by Michael Cummings	Checked	Sheet 7 of 7

LOCK GUIDEWALLS :

A. UPSTREAM GUIDEWALL

1. Cast-in-place concrete

Volume = 2,269 CY

2. Precast concrete

Volume = 1,389 CY

3. Gravel Fill

Volume = 6,188 CY

4. Sheet Piling

Area = 35,299 SF

5. Permanent Cell Fill

Volume = 2,673 CY

6. Tremie Concrete

Volume = 627 CY

B. DOWNSTREAM GUIDEWALL

1. Cast-in-place concrete

Volume = 3,556 CY

2. Precast concrete

Volume = 4,333 CY

3. Gravel Fill

Volume = 12,376 CY

4. Sheet Piling

Area = 63,944 SF

5. Permanent Cell Fill

Volume = 2,673 CY

6. Tremie Concrete

Volume = 1,082 CY

Guidewall Summary

Total Cast-in-Place Concrete	5,825	CY
Total Precast Concrete	5,722	CY
Total Gravel Fill	18,564	CY
Total Sheet Piling	99,243	SF
Total Permanent Cell Fill	5,347	CY
Total Tremie Concrete	1,709	CY

LOCK AND DAM NO. 12, LOCATION 2, TYPE B
(PILE-FOUNDED)

CCOUNT CODE	ITEM	QUANTITY	UNIT	UNIT PRICE ($'s)	AMOUNT ($1,000's)
01.	**LANDS AND DAMAGES**				
	REAL ESTATE	1	JOB	SUM	200
04.	**DAMS**				
	04 DAMS SUBTOTAL				0
05.	**LOCKS**				
	SITEWORK				
	MOBILIZATION	1	JOB	SUM	10,650
	DEMOLITION	1	JOB	SUM	1,910
	EXCAVATION	27,090	CY	4.5	122
	BACKFILL	22,000	CY	6.25	138
	WALL FILL	7,234	CY	10.00	72
	SCOUR PROTECTION	429	TN	20.00	9
	SCOUR STONE IN LOCK FLOOR	6,450	TN	25.00	161
	FOUNDATION/LOCK DEWATERING	1	JOB	SUM	3,000
	MARINE FACILITIES, TEMP. MOORING STR.	1	JOB	SUM	3,900
	CONCRETE				
	UNDERBASE GROUTING	5,297	CY	200	1,059
	CAST IN PLACE REINFORCED CONCRETE	36,625	CY	217	7,948
	PRECAST CONCRETE	7,740	CY	400	3,096
	TREMIE CONCRETE	5,651	CY	165	932
	POST TENSION STEEL	135,000	LB	2.5	338
	FURNISH AND SET LANDING PADS	74	EA	19000	1,406
	SET PRECAST WALL UNITS	28	EA	16000	448
	FLOAT IN AND SET FLOOR UNITS	26	EA	16000	416
	FLOAT IN AND SET MITER GATE SILL	1	JOB	SUM	140
	STEEL REINFORCEMENT	2,197,500	LB	0.75	1,648
	METALS				
	SHEET PILING	50,206	SF	21.52	1,080
	WALL UNIT BRACING	1	JOB	SUM	250
	FOUNDATION PILING AND TESTING	1	JOB	SUM	5,300
	STRUCTURAL STEEL (GATES, VALVES, TRASHRACKS, B	1	JOB	SUM	11,613
	STRUCTURAL STEEL (MISCELLANEOUS - LADDERS, ET	1	JOB	SUM	3,040
	ELECTRICAL				
	ELECTRICAL SYSTEM	1	JOB	SUM	4,700
	INSTRUMENTATION	1	JOB	SUM	1,250
	MECHANICAL				
	GATE AND VALVE OPERATING MACHINERY	1	JOB	SUM	2,750
	MECHANICAL SYSTEMS	1	JOB	SUM	3,200
	MISCELLANEOUS	1	JOB	SUM	1,950
	05 LOCKS SUBTOTAL				72,526
05.60.	**GUIDEWALLS**				
	SITEWORK				
	EXCAVATION	118,490	CY	4.5	533
	BACKFILL	73,640	CY	10	736
	SCOUR PROTECTION	18,900	TON	15	284
	CONCRETE				
	42" DIAMETER PILES	1,672	LF	400	669
	CAST IN PLACE REINFORCED CONCRETE	1,570	CY	150	236
	PRECAST BEAMS	10,900	CY	500	5,450
	PRECAST BEAM SEATS	165	CY	1000	165
	TREMIE CONCRETE	130	CY	500	65
	PERMANENT CELL FILL (C0NCRETE)	14,235	CY	200	2,847
	GROUT FOR BEAMS	490	CY	1000	490
	STEEL REINFORCEMENT	1,840,000	LB	0.75	1,380
	GRAVEL FILL	27,993	CY	10	280
	METALS				
	SHEET PILING FOR CELLS (PS31)	177,876	SF	25.00	4,447
	SHEET PILING CUTOFF WALL (PZ35)	45,200	SF	30.00	1,356
	SHEET PILE RETAINING WALL (PZ40)	42,000	SF	30.00	1,260
	FOUNDATION PILING		JOB	SUM	318
	POST TENSIONING	1,280	LF	30	38
	STRUCTURAL STEEL	1	JOB	SUM	4,060
	05.60 GUIDEWALLS SUBTOTAL				24,614
09.	**CHANNEL WORK**	1	JOB	SUM	540
	PROJECT SUBTOTAL				97,880
	CONTINGENCIES 25%				24,470
	PROJECT SUBTOTAL WITH CONTINGENCIES				122,000
30.	**PLANNING, ENGINEERING, AND DESIGN (10%)**				12,000
31.	**CONSTRUCTION MANAGEMENT (10%)**				12,000
	PROJECT TOTAL				$ 146,000

*(EXCLUDES REAL ESTATE, RELOCATION, AND CHANNEL WORK WHICH ARE MORE SITE-SPECIFIC.)

		QUANTITY CALCULATIONS									
	L/D 12 Location 2, Type B, Pile Founded							Sheet 1_ of 3____			
1	Remove existing sill down to										
	elev. 405.33	25	x	2	x	110	=	5,500.00	CF	203.70	CY
2	Remove existing 2' thick slab	95.25	x	2	x	110	=	20,955.00	CF	776.11	CY
3	Demolish existing guidewall, to										
	include timber crib and pile	502	x	30	x	53	=	798,180.00	CF	29,562.22	CY
4	Install sheet piling, PZ27	37.3	x	673	x	2	=	50,205.80	SF		
5	Excavation	6.3	x	172		675	=	731,430.00	CF	27,090.00	CY
6	Place scour stone	1.5	x	172	x	675	=	174,150.00	CF	6,450.00	CY
7	Place scour protection (riprap)	3	x	25	x	110	=	8,250.00	CF	305.56	CY
8	Install piling, HP 14 x 89										
	(54 ea per monolith @ 50' long										
	for 28 monoliths)	54	x	50	x	28	=	75,600.00	LF		
	Lockwall/floor connection										
9	HP14 x 117 stud w/welded ribs	23	x	2	=	46	EA				
	thixotropic grout @ HP studs	23.5	x	46	=	1,081.00	CF				
	thixotropic grout @ joints per ft	0.25	x	5	x	1296	=	1,620.00	CF		
10	Grout under base filling	2	x	650	x	110	=	143,000.00	CF	5,296.30	CY
11	Install piling, HP 14 x 89										
	(5 ea per floor unit @ 45' long										
	for 26 floor units	5	x	45	x	26	=	5,850.00	LF		
							=	26	EA		
12	Sand infill of floor units, large	((9.25' x 6.25' x2)+(19.75' x 6.25' x 4))x 510'					=	310,794.00	CF		
	" " " " " , small	((9.25' x 3' x 2)+(19.75' x 3' x 4)) x 66					=	19,305.00	CF		
								330,099.00	CF	12,225.89	CY
13	Concrete										
	riverward wall										
	-bottom lift (tremie)	5.5	x	23	x	603	=	76,279.50	CF		
	-2nd lift (reinforced)	4	x	28	x	603	=	67,536.00	CF		
	-3rd lift (reinforced)inside	13.5	x	7.75	x	603	=	63,088.88	CF		
	- " " " outside	13.5	x	7.75	x	603	=	63,088.88	CF		
	-4th lift (reinforced)	8.5	x	26	x	603	=	133,263.00	CF		
	-5th lift (reinforced)	5	x	28	x	603	=	84,420.00	CF		
	-6th lift (reinforced)outside	5.00	x	9	x	603	=	27,135.00	CF		
	- " " " inside	5.00	x	9	x	603	=	27,135.00	CF		
	-7th lift (reinforced)outside	5.3	x	9	x	603	=	28,763.10	CF		
								570,709.35		21,137.38	CY
14	Concrete										
	landward wall										
	-bottom lift (tremie)	5.5	x	23	x	603	=	76,279.50	CF		
	-2nd lift (reinforced)	4	x	28	x	603	=	67,536.00	CF		
	-3rd lift (reinforced)inside	13.5	x	7.75	x	603	=	63,088.88	CF		
	- " " " outside	13.5	x	7.75	x	603	=	63,088.88	CF		
	-4th lift (reinforced)	8.5	x	26	x	603	=	133,263.00	CF		
	-5th lift (reinforced)	5	x	28	x	603	=	84,420.00	CF		
	-6th lift (reinforced)outside	5.00	x	9	x	603	=	27,135.00	CF		
	- " " " inside	5.00	x	9	x	603	=	27,135.00	CF		
	-7th lift (reinforced)outside	5.3	x	9	x	603	=	28,763.10	CF		
								570,709.35		21,137.38	CY
	Total Concrete									42,274.77	CY
											Ld122bpf

LOCK AND DAM NO. 12, LOCATION 2, TYPE C
(PILE-FOUNDED)

CCOUNT CODE	ITEM	QUANTITY	UNIT	UNIT PRICE ($'s)	AMOUNT ($1,000's)
01.	**LANDS AND DAMAGES**				
	REAL ESTATE	1	JOB	SUM	200
04.	**DAMS**				
	04 DAMS SUBTOTAL				0
05.	**LOCKS**				
	SITEWORK				
	MOBILIZATION	1	JOB	SUM	10,650
	DEMOLITION	1	JOB	SUM	1,910
	EXCAVATION	25,838	CY	4.5	116
	BACKFILL	19,700	CY	10.00	197
	SCOUR PROTECTION	2,000	TN	15.00	30
	SCOUR STONE IN LOCK FLOOR	16,860	TN	15.00	253
	GRAVEL FILTER IN LOCK FLOOR	16,090	TN	20.00	322
	FOUNDATION/LOCK DEWATERING	1	JOB	SUM	3,000
	MARINE FACILITIES, TEMP. MOORING STR.	1	JOB	SUM	3,900
	CONCRETE				
	STRUCTURAL GROUTING	700	CY	200	140
	CAST IN PLACE REINFORCED CONCRETE	32,574	CY	217	7,069
	CAST IN PLACE CONNECTIONS	200	CY	725	145
	PRECAST CONCRETE	10,007	CY	400	4,003
	TREMIE CONCRETE, BASE .	3,574	CY	165	590
	PRECAST FLOOR PANELS	8,210	CY	286	2,348
	POST TENSION STEEL	185,300	LB	2.5	463
	FURNISH AND SET LANDING PADS	74	EA	19000	1,406
	SET PRECAST WALL UNITS	28	EA	16000	448
	FLOAT IN AND SET MITER GATE SILL	1	JOB	SUM	140
	STEEL REINFORCEMENT	1,955,000	LB	0.75	1,466
	METALS				
	SHEET PILING	47,110	SF	21.52	1,014
	WALL UNIT BRACING	1	JOB	SUM	250
	FOUNDATION PILING AND TESTING	1	JOB	SUM	3,487
	STRUCTURAL STEEL (GATES, VALVES, TRASHRACKS, B	1	JOB	SUM	11,613
	STRUCTURAL STEEL (MISCELLANEOUS - LADDERS, ET	1	JOB	SUM	3,040
	ELECTRICAL				
	ELECTRICAL SYSTEM	1	JOB	SUM	4,700
	INSTRUMENTATION	1	JOB	SUM	1,250
	MECHANICAL				
	GATE AND VALVE OPERATING MACHINERY	1	JOB	SUM	2,750
	MECHANICAL SYSTEMS	1	JOB	SUM	3,200
	MISCELLANEOUS	1	JOB	SUM	1,950
	05 LOCKS SUBTOTAL				71,849
05.60.	**GUIDEWALLS**				
	SITEWORK				
	EXCAVATION	118,490	CY	4.5	533
	BACKFILL	73,640	CY	10	736
	SCOUR PROTECTION	18,900	TON	15	284
	CONCRETE				
	42" DIAMETER PILES	1,672	LF	400	669
	CAST IN PLACE REINFORCED CONCRETE	1,570	CY	150	236
	PRECAST BEAMS	10,900	CY	500	5,450
	PRECAST BEAM SEATS	165	CY	1000	165
	TREMIE CONCRETE	130	CY	500	65
	PERMANENT CELL FILL (C0NCRETE)	14,045	CY	200	2,809
	GROUT FOR BEAMS	490	CY	1000	490
	STEEL REINFORCEMENT	1,840,000	LB	0.75	1,380
	GRAVEL FILL	27,611	CY	10	276
	METALS				
	SHEET PILING FOR CELLS (PS31)	177,876	SF	25.00	4,447
	SHEET PILE CUTOFF WALL (PZ35)	45,182	SF	30.00	1,355
	SHEET PILE RETAINING WALL (PZ40)	41,916	SF	30.00	1,257
	FOUNDATION PILING	1	JOB	SUM	318
	POST TENSIONING	1,280	LF	30	38
	STRUCTURAL STEEL	1	JOB	SUM	4,060
	05.60 GUIDEWALLS SUBTOTAL				24,569
09.	**CHANNEL WORK**	1	JOB	SUM	540
	PROJECT SUBTOTAL				97,158
	CONTINGENCIES 25%				24,290
	PROJECT SUBTOTAL WITH CONTINGENCIES				121,000
30.	**PLANNING, ENGINEERING, AND DESIGN (10%)**				12,000
31.	**CONSTRUCTION MANAGEMENT (10%)**				12,000
	PROJECT TOTAL				$ 145,000

		QUANTITY CALCULATIONS									
	L/D 12, Location 2, Type C, Pile Founded							Sheet 1_ of	3_		
1	Remove existing sill down to										
	elev. 577.83	25	x	2	x	110	=	5,500.00	CF	203.70	CY
2	Remove existing 2' thick slab	95.25	x	2	x	110	=	20,955.00	CF	776.11	CY
3	Demolish existing guidewall, to	502	x	30	x	53	=	798,180.00	CF	29,562.22	CY
	include timber crib and pile										
4	Install sheet piling, PZ27	35	x	673	x	2	=	47,110.00	SF		
5	Excavation	10.5	x	110	x	604	=	697,620.00	CF	25,837.78	CY
6	Place scour stone (under walls)	1.5	x	60	x	600	=	54,000.00	CF	2,000.00	CY
7	Install piling, HP 14 x 89										
	(24 ea per monolith @50' long										
	for 28 monoliths)	24	x	50	x	28	=	33,600.00	LF		
8	Steel footing box(1/2"steel plate)										
	riverward wall										
	20.42 lb x [(6'x3'x2)+(4'x3'x2)]=1,225 LB @ 30 locations							36,750.00	LB		
	landward wall										
	20.42 lb x [(6'x3'x2)+(4'x3'x2)]=1,225 LB @ 30 location							36,750.00	LB		
								73,500.00	LB		
9	Install piling, HP 14 x 89								or	2,722.22	TN
	for chamber floor paving blocks										
	(7 ea per joint @ 50' for 14 ea										
	joints)	50	x	7	x	14	=	4,900.00	LF		
10	Scour stone, (removed prior to										
	floor construction)	3	x	110	x	580	=	191,400.00	CF	7,088.89	CY
11	Filter layer	2	x	110	x	580	=	127,600.00	CF	4,725.93	CY
12	Filter gravel	2	x	110	x	580	=	127,600.00	CF	4,725.93	CY
13	Paving blocks (3'x30'x14')										
	1,260cf @ 8/row x 18 rows	1,260	x	8	x	18	=	181,440.00	CF	6,720.00	CY
14	Structural steel (per cell unit)										
	- W18 x 86 waler	86	x	154	=	13,244.00					
	- W18 x 86 brace	86	x	22	=	1,892.00					
	- C12 x 25 diagonal brace	25	x	232	=	5,800.00					
	(There are 30 cell units, 15 in each wall)					20,936.00	x	30	=	628,080.00	LB
									or	314.04	TN
15	Precast liner										
	riverward wall	23.8	x	603	x	1	=	14,351.40	CF		
	landward wall	23.8	x	603	x	1	=	14,351.40	CF		
								28,702.80	CF		
									or	1,063.07	CY
16	Precast concrete miter gate sill										
	and wall monoliths										
	Taken from quantity calc's from St. Paul District's Microstation analysis										
						- Slab volume			=	1,434.50	CY
						- Wall volume			=	771.32	CY
						- Concrete strut volume			=	17.25	CY
	Total Precast Concrete Volume for Miter Gate Sill & Wall Monoliths								=	2,223.07	CY
											Ld12cpf

LOCK AND DAM NO. 12, LOCATION 3, TYPE B
1200' LOCK ALTERNATIVE (ROCK FOUNDED)

ACCOUNT CODE	ITEM	QUANTITY	UNIT	UNIT PRICE ($'s)	AMOUNT ($1,000's)
01.	**LANDS AND DAMAGES**				
	REAL ESTATE	1	JOB	SUM	230
04.	**DAMS**				
	REMOVAL OF EXISTING STRUCTURES	1	JOB	SUM	150
	04 DAMS SUBTOTAL				150
05.	**LOCKS**				
	SITEWORK				
	MOBILIZATION	1	JOB	SUM	10,650
	DEMOLITION	1	JOB	SUM	1,910
	EXCAVATION	48,960	CY	6.25	306
	FOUNDATION FILL AT SCOUR HOLE	21,013	CY	18.75	394
	WALL FILL	15,760	CY	10.00	158
	CAPSTONE	52,660	TN	25.00	1,317
	RIPRAP	33,380	TN	20.00	668
	LEVELING STONE IN LOCK FLOOR	4,580	TN	15.00	69
	GRAVEL FILTER IN LOCK FLOOR	16,606	TN	15.00	249
	GEOTEXTILE	13,740	SY	6.00	82
	FOUNDATION/LOCK DEWATERING	1	JOB	SUM	3,000
	MARINE FACILITIES, TEMP. MOORING STR.	1	JOB	SUM	3,900
	CONCRETE				
	STRUCTURAL GROUTING	450	CY	200	90
	CAST IN PLACE REINFORCED CONCRETE	63,600	CY	217	13,801
	CAST IN PLACE CONNECTIONS	964	CY	725	699
	PRECAST CONCRETE	9,700	CY	400	3,880
	TREMIE CONCRETE, BASE .	10,340	CY	165	1,706
	PRECAST FLOOR PAVERS AND STRUTS	15,450	CY	286	4,419
	SET PRECAST FLOOR BEAMS	31	EA	16000	496
	SET FLOOR PANELS	62	EA	10000	620
	STEEL REINFORCEMENT	7,614,000	LB	0.75	5,711
	METALS				
	SHEET PILING	31,700	SF	35.80	1,135
	SHEET PILE BRACING	1	JOB	SUM	350
	FOUNDATION PILING AND TESTING	209,190	LF	39.75	8,315
	STRUCTURAL STEEL (GATES, VALVES, ETC.)	1	JOB	SUM	11,613
	STRUCTURAL STEEL (MISCELLANEOUS - LADDERS, ETC.)	1	JOB	SUM	3,040
	ELECTRICAL				
	ELECTRICAL SYSTEM		JOB	SUM	4,700
	INSTRUMENTATION	1	JOB	SUM	1,250
	MECHANICAL				
	GATE AND VALVE OPERATING MACHINERY	1	JOB	SUM	2,750
	MECHANICAL SYSTEMS	1	JOB	SUM	3,200
	MISCELLANEOUS	1	JOB	SUM	1,950
	05 LOCKS SUBTOTAL				92,427

LOCK AND DAM NO. 12, LOCATION 3, TYPE B
1200' LOCK ALTERNATIVE (ROCK FOUNDED)

05.60.	**GUIDEWALLS**				
	SITEWORK				
	EXCAVATION	118,490	CY	4.5	533
	BACKFILL	73,640	CY	10	736
	SCOUR PROTECTION	46,350	TON	15	695
	CONCRETE				
	42" DIAMETER PILES	6,360	LF	400	2,544
	CAST IN PLACE REINFORCED CONCRETE	6,207	CY	150	931
	PRECAST BEAMS	17,325	CY	500	8,663
	PRECAST BEAM SEATS	262	CY	1000	262
	TREMIE CONCRETE	1,709	CY	500	855
	PERMANENT CELL FILL (C0NCRETE)	5,709	CY	200	1,142
	GROUT FOR BEAMS	778	CY	1000	778
	STEEL REINFORCEMENT	2,921,700	LB	0.75	2,191
	GRAVEL FILL	19,820	CY	10	198
	METALS				
	SHEET PILING	105,096	SF	25.00	2,627
	FOUNDATION PILING	1	JOB	SUM	318
	POST TENSIONING	2,030	LF	30	61
	STRUCTURAL STEEL	1	JOB	SUM	4,060
	05.60 GUIDEWALLS SUBTOTAL				26,594
09.	**CHANNEL WORK**	1	JOB	SUM	3,156
	PROJECT SUBTOTAL				122,557
	CONTINGENCIES 25%				30,639
	PROJECT SUBTOTAL WITH CONTINGENCIES				153,196
30.	**PLANNING, ENGINEERING, AND DESIGN (10%)**				15,000
31.	**CONSTRUCTION MANAGEMENT (10%)**				15,000
	PROJECT TOTAL				$ 183,000

Subject	ROCK FOUNDED LOCKS: L/D 12 Location 3 Quantities for Type B Lock, Crane-In Construction	Date SEP 96
Computed by Michael Cummings	Checked	Sheet 1 of 6

Crane - In Gate Monolith

Note: For quantities change the Red values in the cells of the dimensioned cross section shown.

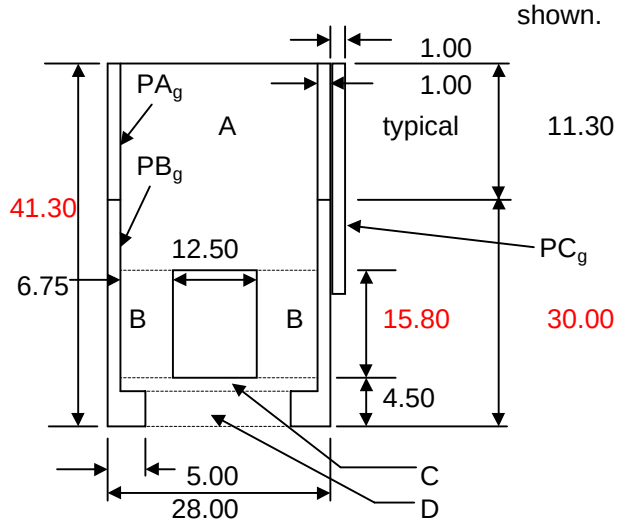

Cast in place concrete

A_g =	546.0	SF	
B_g =	213.3	SF	
C_g =	26.0	SF	
D_g =	63.0	SF	CULVERT
Total =	848.3	SF	

Pre-cast concrete

PA_g =	22.6	SF
PB_g =	88.0	SF
PC_g =	18.5	SF
Total =	129.1	SF

hght chk = 41.30 left
hght chk = 41.30 right

US lngth = .0 ft DS lngth = 250.0 ft

Crane - in Lock Wall

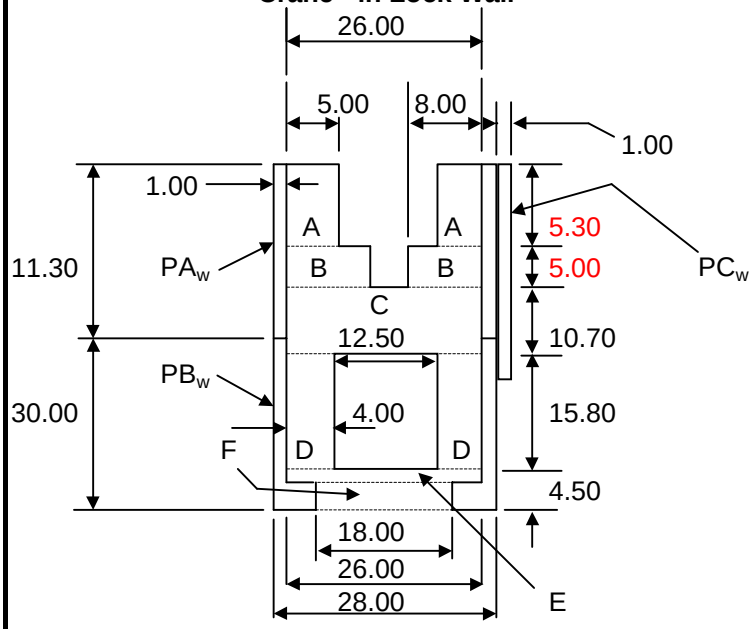

Cast in place concrete

A_w =	53.00	SF	
B_w =	80.00	SF	
C_w =	278.20	SF	
D_w =	213.30	SF	
E_w =	26.00	SF	CULVERT
F_w =	63.00	SF	
Total =	713.50	SF	

Pre-cast concrete

PA_w =	22.6	SF
PB_w =	88.0	SF
PC_w =	18.5	SF
Total =	129.1	SF

hght chk = 41.30 left
hght chk = 41.30 right

RS Wall = 998.0 ft LS Wall = 515.0 ft

Ld123bp

Subject		Date
L/D 12 Location 3 Quantities for Type B Lock, Crane-In Construction		SEP 96
Computed by Michael Cummings	Checked	Sheet 2 of 6

Typical cell for cofferdam

Area = 1,963.0 ft^2

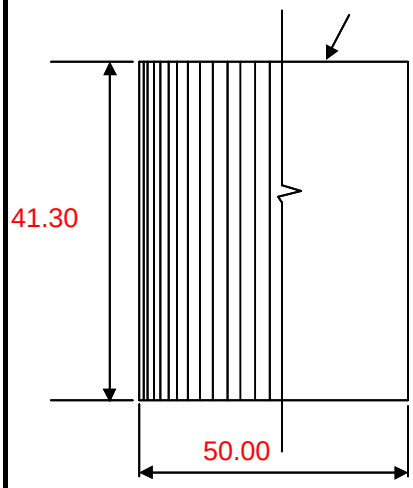

Pile type: ps31
Choose PSA23, PS27.5, or PS31

Area between cells:

Area =	855.0	ft^2
Distance =	15.91	ft
Length =	1.64	ft
Number in cell =	96	piles
No. in space =	21	piles
US Length =	110.0	ft
DS Length =	110.0	ft

LOCK CHAMBER WALLS:

A. WALL MONOLITHS

1. River side walls

(a) Cast in place concrete

Volume = 26,373.1 CY

(b) Precast concrete

Volume = 4,771.9 CY

1. Land side walls

(a) Cast in place concrete

Volume = 13,609.4 CY

(b) Precast concrete

Volume = 2,462.5 CY

B. GATE MONOLITHS

1. Upstream cast in place concrete

Volume = .0 CY

2. Upstream precast concrete

Volume = .0 CY

1. Downstream cast in place concrete

Volume = 15,709.3 CY

2. Downstream precast concrete

Volume = 2,390.7 CY

Subject		Date
L/D 12 Location 3 Quantities for Type B Lock, Crane-In Construcion		SEP 96
Computed by Michael Cummings	Checked	Sheet 3 of 6

COFFERDAMS:

1. Cofferdam #1, Upstream

Number = 2.0 cells

Total = 468.0 piles

2. Cofferdam #2, Downstream

Number = 2.0 cells

Total = 17,242.0 CY fill volume

SILLS:

Length = 120.0 ft
Width = 111.0 ft
Height = 8.0 ft

Volume = 7,893.3 CY

SUMMARY:

CONCRETE (Cast in place)

A.	Lockwalls =	39,982.4 CY
B.	Gate monoliths =	15,709.3 CY
C.	Sills =	7,893.3 CY
	Total =	63,600.0 CY

PRECAST CONCRETE

A.	Lockwalls =	7,234.4 CY
B.	Gate monoliths =	2,390.7 CY
	Total =	9,700.0 CY

SHEETPILES

A.	Required number for cofferdams =	468.0 piles
	Total =	500.0 CY
	Total =	31,700.0 SF of piling

FILL

A.	Required fill for cofferdams =	17,242.0 CY
	Total =	17,300.0 CY

Subject		Date
L/D 12 Location 3 Quantities for Type B Lock, Crane-In Construcion		SEP 96
Computed by Michael Cummings	Checked	Sheet 4 of 6

Upstream Guidewall Cell, Small

(typical)

Area = 700.0 SF

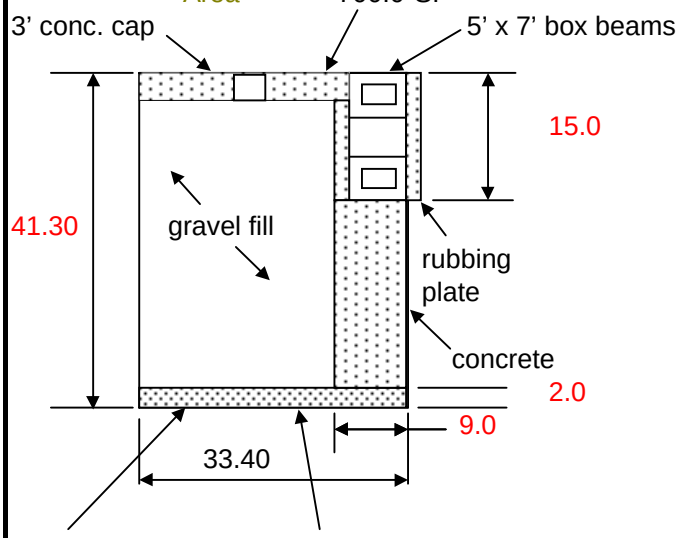

Area = 876.0 SF

Note: For quantities change the RED values in the cells of the dimensioned cross section shown.

Cast-in-Place Concrete

3' conc. cap	=	77	CY
concrete	=	197	CY
Total	=	274	CY
for 7 cells	=	1,916	CY
Tremie concrete	=	65	CY
for 7 cells	=	455	CY

Precast Concrete

5'x7' beam	=	889	CY
rubbing pl.	=	500	CY
Total	=	1,389	CY
Gravel fill	=	944	CY
for 7 cells	=	6,607	CY
Sheet Piling	=	4,334	SF
for 7 cells	=	30,335	SF

Upstream Guidewall Cell, Large

(typical)

Area = 2,124.0 SF

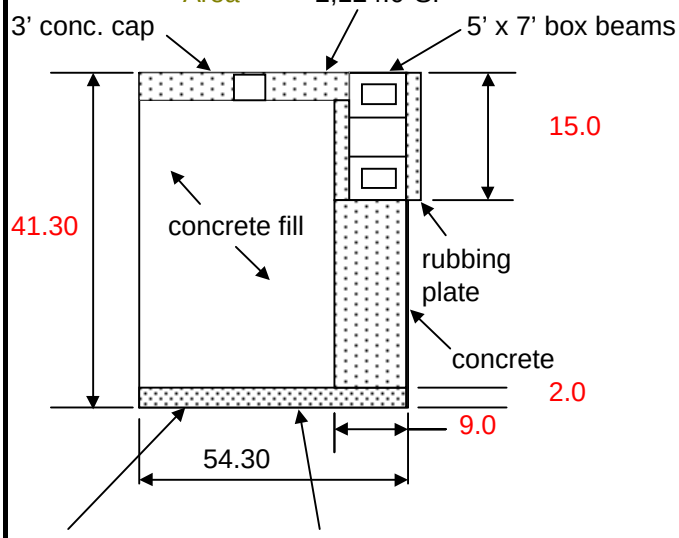

Area = 2,316.0 SF

Note: For quantities change the RED values in the cells of the dimensioned cross section shown.

Cast-in-Place Concrete

3' conc. cap	=	235	CY
concrete	=	252	CY
Total	=	487	CY
Tremie concrete	=	172	CY
Permanent Cell Fill		2,854	CY
Sheet Piling	=	7,045	SF

Subject		Date
L/D 12 Location 3 Quantities for Type B Lock, Crane-In Construcion		SEP 96
Computed by Michael Cummings	Checked	Sheet 5 of 6

Downstream Guidewall Cell, Small

(typical)

Area = 700.0 SF

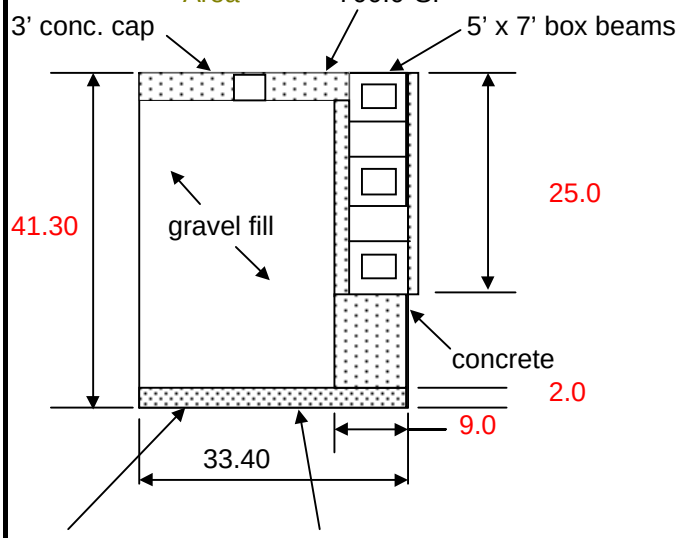

Area = 876.0 SF

Note: For quantities change the RED values in the cells of the dimensioned cross section shown.

Cast-in-Place Concrete			
3' conc. cap	=	77	CY
concrete	=	149	CY
Total	=	225	CY
for 14 cells	=	3,156	CY
Tremie concrete	=	65	CY
for 14 cells	=	910	CY
Precast Concrete			
5'x7' beam	=	2,667	CY
rubbing pl.	=	1,667	CY
Total	=	4,333	CY
Gravel fill	=	944	CY
for 14 cells	=	13,213	CY
Sheet Piling	=	4,334	SF
for 14 cells	=	60,670	SF

Downstream Guidewall Cell, Large

(typical)

Area = 2,124.0 SF

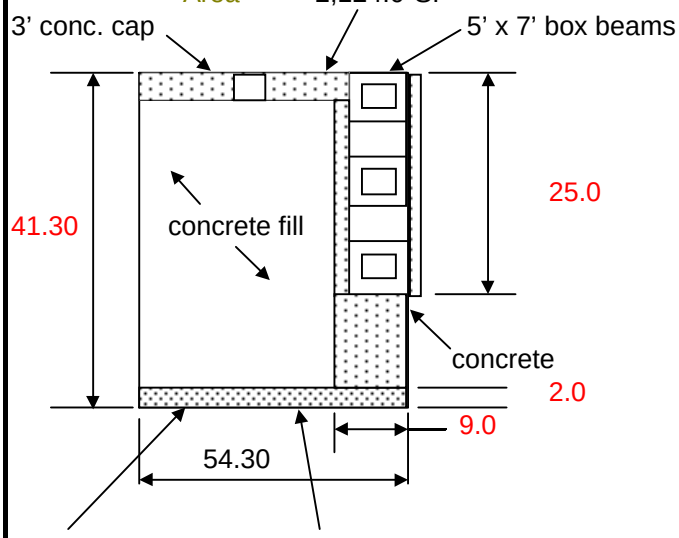

Area = 2,316.0 SF

Note: For quantities change the RED values in the cells of the dimensioned cross section shown.

Cast-in-Place Concrete			
3' conc. cap	=	235	CY
concrete	=	413	CY
Total	=	648	CY
Tremie concrete	=	172	CY
Permanent Cell Fill		2,854	CY
Sheet Piling	=	7,045	SF

Subject		Date
L/D12 Location 3 Quantities for Type B Lock, Crane-In Construcion		SEP 96
Computed by Michael Cummings	Checked	Sheet 6 of 6

LOCK GUIDEWALLS :

A. UPSTREAM GUIDEWALL

1. Cast-in-place concrete

Volume = 2,403 CY

2. Precast concrete

Volume = 1,389 CY

3. Gravel Fill

Volume = 6,607 CY

4. Sheet Piling

Area = 37,380 SF

5. Permanent Cell Fill

Volume = 2,854 CY

6. Tremie Concrete

Volume = 627 CY

B. DOWNSTREAM GUIDEWALL

1. Cast-in-place concrete

Volume = 3,804 CY

2. Precast concrete

Volume = 4,333 CY

3. Gravel Fill

Volume = 13,213 CY

4. Sheet Piling

Area = 67,715 SF

5. Permanent Cell Fill

Volume = 2,854 CY

6. Tremie Concrete

Volume = 1,082 CY

Guidewall Summary

Total Cast-in-Place Concrete	6,207	CY
Total Precast Concrete	5,722	CY
Total Gravel Fill	19,820	CY
Total Sheet Piling	105,096	SF
Total Permanent Cell Fill	5,709	CY
Total Tremie Concrete	1,709	CY

LOCK AND DAM NO. 12, LOCATION 3, TYPE C
1200' LOCK ALTERNATIVE (PILE FOUNDED)

CCOUNT CODE	L/D 12	QUANTITY	UNIT	NIT PRICE ($'s)	AMOUNT ($1,000's)
01.	**LANDS AND DAMAGES**				
	REAL ESTATE	1	JOB	SUM	200
04.	**DAMS**				
	REMOVAL OF EXISTING STRUCTURES	1	JOB	SUM	150
	04 DAMS SUBTOTAL				150
05.	**LOCKS**				
	SITEWORK				
	MOBILIZATION	1	JOB	SUM	10,650
	DEMOLITION	1	JOB	SUM	1,910
	EXCAVATION	63,600	CY	6.25	398
	FOUNDATION FILL AT SCOUR HOLE	21,000	CY	18.75	394
	WALL FILL	15,760	CY	10.00	158
	CAPSTONE	52,660	TN	25.00	1,317
	RIPRAP	33,380	TN	20.00	668
	LEVELING STONE IN LOCK FLOOR	4,580	TN	15.00	69
	GRAVEL FILTER IN LOCK FLOOR	16,606	TN	15.00	249
	GEOTEXTILE	13,740	SY	6.00	82
	FOUNDATION/LOCK DEWATERING	1	JOB	SUM	3,000
	MARINE FACILITIES, TEMP. MOORING STR.	1	JOB	SUM	3,900
	CONCRETE				
	STRUCTURAL GROUTING	450	CY	200	90
	CAST IN PLACE REINFORCED CONCRETE	58,800	CY	217	12,760
	CAST IN PLACE CONNECTIONS	964	CY	725	699
	PRECAST CONCRETE	2,895	CY	400	1,158
	TREMIE CONCRETE	9,135	CY	165	1,507
	PRECAST FLOOR PAVERS AND STRUTS	15,450	CY	286	4,419
	SET PRECAST FLOOR BEAMS	31	EA	16000	496
	SET FLOOR PANELS	62	EA	10000	620
	STEEL REINFORCEMENT	6,586,000	LB	0.75	4,940
	METALS				
	SHEET PILING	260,100	SF	35.80	9,312
	SHEET PILE BRACING	1	JOB	SUM	350
	FOUNDATION PILING AND TESTING	222,300	LF	39.75	8,836
	STRUCTURAL STEEL (GATES, VALVES, TRASH	1	JOB	SUM	11,613
	STRUCTURAL STEEL (MISCELLANEOUS - LAD	1	JOB	SUM	3,040
	ELECTRICAL				
	ELECTRICAL SYSTEM	1	JOB	SUM	4,700
	INSTRUMENTATION	1	JOB	SUM	1,250
	MECHANICAL				
	GATE AND VALVE OPERATING MACHINERY	1	JOB	SUM	2,750
	MECHANICAL SYSTEMS	1	JOB	SUM	3,200
	MISCELLANEOUS	1	JOB	SUM	1,950
	05 LOCKS SUBTOTAL				96,482

LOCK AND DAM NO. 12, LOCATION 3, TYPE C
1200' LOCK ALTERNATIVE (PILE FOUNDED)

05.60.	**GUIDEWALLS**				
	SITEWORK				
	~~EXCAVATION~~ *(Included in Channel Work)*	0	CY	4.5	0
	~~BACKFILL~~ *None*	0	CY	10	0
	SCOUR PROTECTION	37,312	TON	15	560
	CONCRETE				
	42" DIAMETER PILES	5,120	LF	400	2,048
	CAST IN PLACE REINFORCED CONCRETE	977	CY	150	147
	PRECAST BEAMS	13,947	CY	500	6,973
	PRECAST BEAM SEATS	211	CY	1000	211
	TREMIE CONCRETE	168	CY	500	84
	PERMANENT CELL FILL (C0NCRETE)	7,806	CY	200	1,561
	GROUT FOR BEAMS	626	CY	1000	626
	STEEL REINFORCEMENT	2,351,969	LB	0.75	1,764
	GRAVEL FILL	38,234	CY	10	382
	METALS				
	SHEET PILING	1	JOB	SUM	6,131
	FOUNDATION PILING	1	JOB	SUM	256
	POST TENSIONING	1,634	LF	30	49
	STRUCTURAL STEEL	1	JOB	SUM	3,268
	FLOATING GUIDEWALL	1	JOB	SUM	3,750
	05.60 GUIDEWALLS SUBTOTAL				27,811
09.	**CHANNEL WORK**	1	JOB	SUM	3,160
	PROJECT SUBTOTAL				127,803
	CONTINGENCIES 25%				31,951
	PROJECT SUBTOTAL WITH CONTINGENCIES				159,754
30.	**PLANNING, ENGINEERING, AND DESIGN (10%)**				15,975
31.	**CONSTRUCTION MANAGEMENT (10%)**				15,975
	PROJECT TOTAL				$ 191,704

TOTAL BASIC LOCK COST (O4., 05., 05.60.) WITH CONTINGENCIES, PED, & CM*	**$ 187,000**

*(EXCLUDES REAL ESTATE, RELOCATION, AND CHANNEL WORK WHICH ARE MORE SITE-SPECIFIC.)

Subject	ROCK FOUNDED LOCKS: L/D 12 Location 3 Quantities for Type C Lock, Parallel Sheetpile Walls	Date June 1997
Computed by David R. Wehrley	Checked DRW	Sheet 1 of 4

Riverward Lockwall

(Including the miter gate monolith)

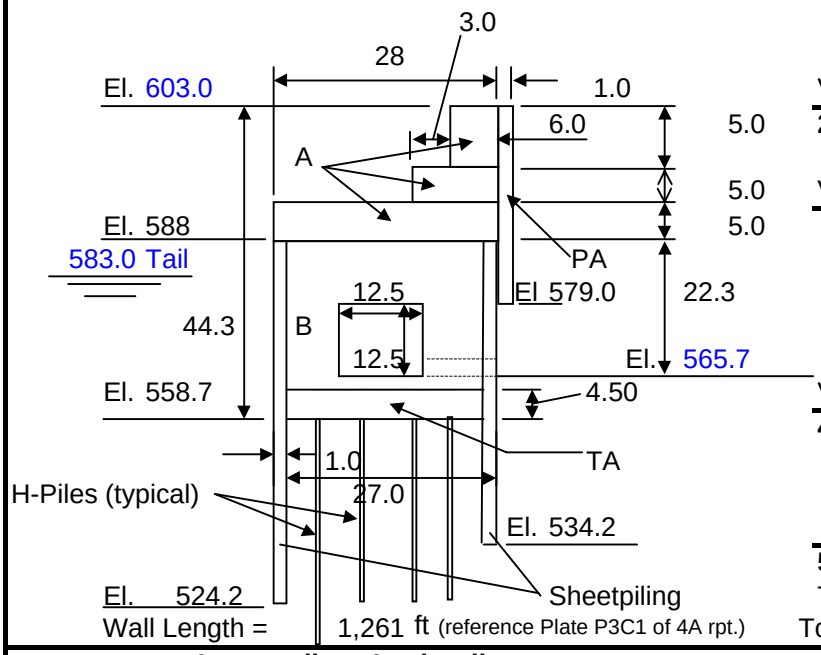

Wall Length = 1,261 ft (reference Plate P3C1 of 4A rpt.)

1. Cast in place concrete

A =	215.0	SF
B =	498.8	SF
Sum =	713.8	SF
Volume =	**33,339**	CY

2. Tremie concrete

TA =	121.5	SF
Volume =	**5,675**	CY

3. Precast concrete

PA =	24.0	SF	
PB =	14.5	SF	(Culvert top, not shown)
Sum =	38.5	SF	
Volume =	**1,798**	CY	

4. Sheetpiling

Ht. Left=	63.8	FT
Ht. Right=	53.8	FT
Area =	**148,294**	SF (both sides)

5. H-Piling = 54/45' mono x wall length

Total No.=	1,513	HP 14 X89
Total Lgth.=	**113,490**	LF HP

Intermediate Lockwall

(Including the miter gate monolith)

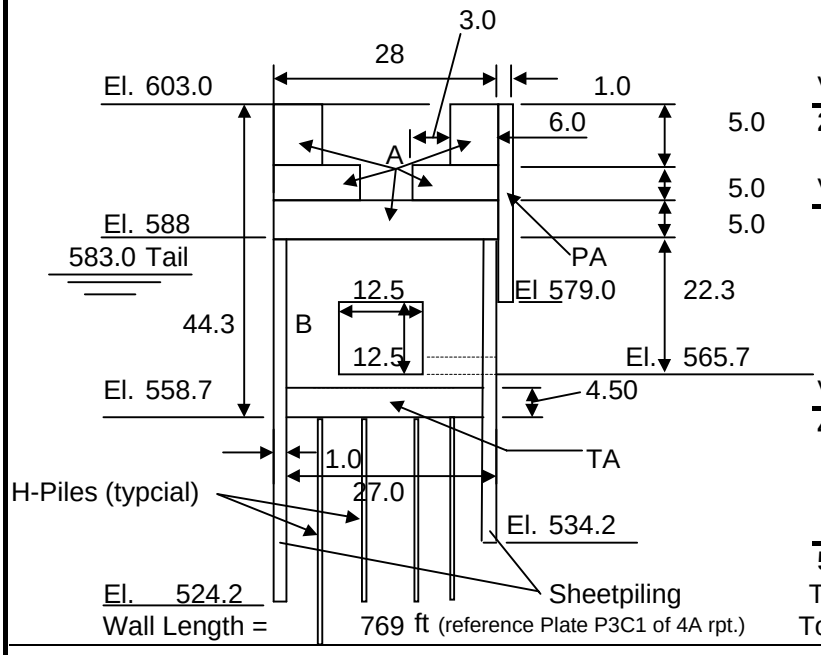

Wall Length = 769 ft (reference Plate P3C1 of 4A rpt.)

1. Cast in place concrete

A =	290.0	SF
B =	498.8	SF
Sum =	788.8	SF
Volume =	**22,468**	CY

2. Tremie concrete

TA =	121.5	SF
Volume =	**3,461**	CY

3. Precast concrete

PA =	24.0	SF	
PB =	14.5	SF	(Culvert top, not shown)
Sum =	38.5	SF	
Volume =	**1,097**	CY	

4. Sheetpiling

Ht. Left=	63.8	FT
Ht. Right=	53.8	FT
Area =	**90,434**	SF (both sides)

5. H-Piling = 54/45' mono x wall length

Total No.=	923	HP 14 X89
Total Lgth.=	**69,210**	FT HP

Subject		Date
L/D 12 Location 3 Quantities for Type C Lock, Parallel Sheetpile Walls		June 1997
Computed by David R. Wehrley	Checked DRW	Sheet 2 of 4

COFFERDAM (ONLY SINGLE WALL COFFERDAM -- FOR LOWER MITER GATE MONOLITH):

ASSUME THE SAME AS L/D 25

Extra Sheetpiling = 2 x (29+110+29) x length
= 21,437 LF Sheetpiling

LOWER MITER GATE SILL:

Length = 120.0 ft
Width = 110.0 ft
Average Height = 6.0 ft

Volume = 2,933.3 CY (cast-in-place concrete)

H-piling for sill: Assume 5' spacing each way, 75' long
Total = (120/5 x 110/5) x 75
= 39,600 LF (HP 14X89)

SUMMARY:

CONCRETE (Cast in place)

Lockwalls =	55,807	CY
Sills =	2,933	CY
Total =	58,800	CY

PRECAST CONCRETE

Total =	2,895	CY

TREMIE CONCRETE

Total =	9,135	CY

SHEETPILING

Required quantity for walls =	238,700	SF
Required quantity for cofferdam =	21,400	SF
Total =	260,100	SF of piling

FOUNDATION PILING

Total =	222,300	LF (HP 14 X 89)

Subject		Date
L/D 12 Location 3 Quantities for Type C Lock, Guardwalls		June 1997
Computed by David R. Wehrley	Checked David R. Wehrley	Sheet of 3 4

Upstream Guardwall Cell, Small (14 total)
(Downstream Quantities the same)

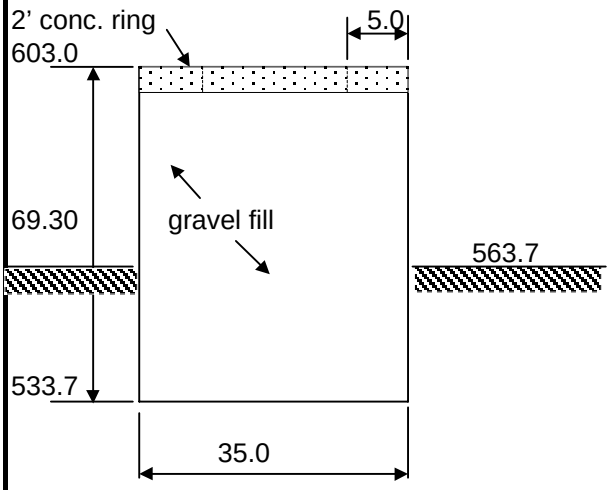

Except for those quantities computed here, all other quantities are assumed the same as for Lock 25 (the model site for pile-founded locks).

Cast-in-Place Concrete

2' conc. ring	=	34.9	CY
for 14 cells	=	489	CY
Gravel fill	=	1,366	CY
for 14 cells	=	19,117	CY
Sheet Piling	=	7,620	SF
for 14 cells	=	106,679	SF

Upstream Guardwall Cell, Large, Concrete filled (1 total)
(Downstream Quantities the same)

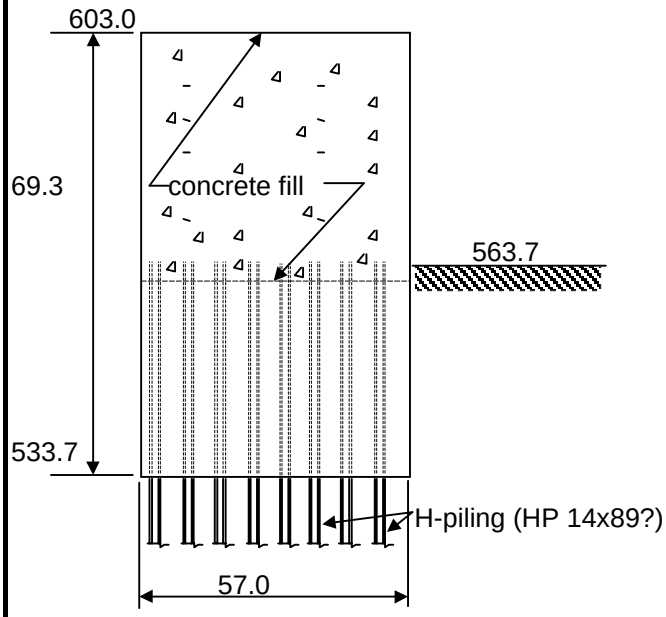

Concrete Fill for Cell
= 3,903 CY

Sheet Piling = 12,410 SF

H-piling:
No. of Piles = 102
Length of Piles = 7,650 L.F.

Subject		Date
L/D 12 Location 3 Quantities for Type C Lock, Guardwalls		June 1997
Computed by David R. Wehrley	Checked David R. Wehrley	Sheet 4 of 4

LOCK GUIDEWALLS :

A. UPSTREAM GUIDEWALL

1. Concrete Rings (cast-in-place)

Volume = 489 CY

2. Concrete cell fill

Volume = 3,903 CY

3. Gravel Fill

Volume = 19,117 CY

4. Sheet Piling

Area = 119,089 SF

5. H-Piling

Length = 7,650 LF

B. DOWNSTREAM GUIDEWALL

1. Concrete Rings (cast-in-place)

Volume = 489 CY

2. Concrete cell fill

Volume = 3,903 CY

3. Gravel Fill

Volume = 19,117 CY

4. Sheet Piling

Area = 119,089 SF

5. H-Piling

Length = 7,650 LF

Guidewall Summary

Total Cast-in-Place Concrete	977	CY
Total Concrete Fill	7,806	CY
Total Gravel Fill	38,234	CY
Total Sheet Piling	238,177	SF
Total H-Piling	15,300	LF

LOCK AND DAM NO.12, LOCATION NO.4, TYPE A,
1200' LOCK ALTERNATIVE (PILE FOUNDED)

ACCOUNT CODE	ITEM	QUANTITY	UNIT	UNIT PRICE ($'s)	AMOUNT ($1,000's)
01.	**LANDS AND DAMAGES**				
	REAL ESTATE	1	JOB	SUM	200
04.	**DAMS**				
	DEMOLITION (TAINTER GATE BAY NO.1)	1	JOB	SUM	1,504
	CONCRETE (TIE-IN TO EXISTING LOCK)	362	CY	280.00	101
	MISCELLANEOUS	1	JOB	SUM	150
	REPLACEMENT TAINTER GATE	1	JOB	SUM	25,000
	04 DAMS SUBTOTAL				26,755
05.	**LOCKS**				
	SITEWORK				
	MOBILIZATION	1	JOB	SUM	10,650
	DEMOLITION	1	JOB	SUM	1,910
	EXCAVATION	48,960	CY	6.25	306
	FOUNDATION FILL AT SCOUR HOLE	42,026	CY	18.75	788
	LOCK WALL FILL AND COFFERDAM FILL	330,100	CY	10.00	3,301
	CAPSTONE	52,660	TN	25.00	1,317
	RIPRAP	33,380	TN	20.00	668
	LEVELING STONE IN LOCK FLOOR	4,580	TN	15.00	69
	GRAVEL FILTER IN LOCK FLOOR	16,606	TN	15.00	249
	GEOTEXTILE	13,740	SY	6.00	82
	FOUNDATION/LOCK DEWATERING	1	JOB	SUM	3,000
	MARINE FACILITIES, TEMP. MOORING STR.	1	JOB	SUM	3,900
	CONCRETE				
	STRUCTURAL GROUTING	450	CY	200	90
	CAST IN PLACE REINFORCED CONCRETE	107,900	CY	217	23,414
	CAST IN PLACE CONNECTIONS	964	CY	725	699
	PRECAST CONCRETE	0	CY	400	0
	TREMIE CONCRETE, BASE .	12,736	CY	165	2,101
	PRECAST FLOOR PAVERS AND STRUTS	15,450	CY	286	4,419
	SET PRECAST FLOOR BEAMS	31	EA	16000	496
	SET FLOOR PANELS	62	EA	10000	620
	STEEL REINFORCEMENT	6,474,000	LB	0.75	4,856
	METALS				
	SHEET PILING	643,500	SF	35.80	23,037
	SHEET PILE BRACING	1	JOB	SUM	350
	FOUNDATION PILING AND TESTING	209,190	LF	39.75	8,315
	STRUCTURAL STEEL (GATES, VALVES, ETC.)	1	JOB	SUM	11,613
	STRUCT. STEEL (MISCELLANEOUS - LADDERS, ETC.)	1	JOB	SUM	3,040
	ELECTRICAL				
	ELECTRICAL SYSTEM		JOB	SUM	4,700
	INSTRUMENTATION	1	JOB	SUM	1,250
	MECHANICAL				
	GATE AND VALVE OPERATING MACHINERY	1	JOB	SUM	2,750
	MECHANICAL SYSTEMS	1	JOB	SUM	3,200
	MISCELLANEOUS	1	JOB	SUM	1,950
	05 LOCKS SUBTOTAL				123,140

LOCK AND DAM NO.12, LOCATION NO.4, TYPE A,
1200' LOCK ALTERNATIVE (PILE FOUNDED)

05.60.	**GUIDEWALLS**				
	SITEWORK				
	EXCAVATION	118,490	CY	4.5	533
	BACKFILL	73,640	CY	10	736
	SCOUR PROTECTION	46,350	TON	15	695
	CONCRETE				
	42" DIAMETER PILES	6,360	LF	400	2,544
	CAST IN PLACE REINFORCED CONCRETE	6,207	CY	150	931
	PRECAST BEAMS	17,325	CY	500	8,663
	PRECAST BEAM SEATS	262	CY	1000	262
	TREMIE CONCRETE	1,709	CY	500	855
	PERMANENT CELL FILL (C0NCRETE)	5,709	CY	200	1,142
	GROUT FOR BEAMS	778	CY	1000	778
	STEEL REINFORCEMENT	2,921,700	LB	0.75	2,191
	GRAVEL FILL	19,820	CY	10	198
	METALS				
	SHEET PILING	105,096	SF	25.00	2,627
	FOUNDATION PILING	1	JOB	SUM	318
	POST TENSIONING	2,030	LF	30	61
	STRUCTURAL STEEL	1	JOB	SUM	4,060
	05.60 GUIDEWALLS SUBTOTAL				26,594
09.	**CHANNEL WORK**	1	JOB	SUM	2,974
	PROJECT SUBTOTAL				179,664
	CONTINGENCIES 25%				44,916
	PROJECT SUBTOTAL WITH CONTINGENCIES				224,579
30.	**PLANNING, ENGINEERING, AND DESIGN (10%)**				22,000
31.	**CONSTRUCTION MANAGEMENT (10%)**				22,000
	PROJECT TOTAL				$ 269,000

LOCK AND DAM NO.12, LOCATION 4, TYPE A
1200'LOCK ALTERNATIVE (PILE FOUNDED)

Subject	PILE FOUNDED LOCKS: L/D 12 Location 4 Quantities for Type A Lock, Crane-In Construction	Date Sep 96
Computed by Michael Cummings	Checked	Sheet 1 of 6

Gate Monolith

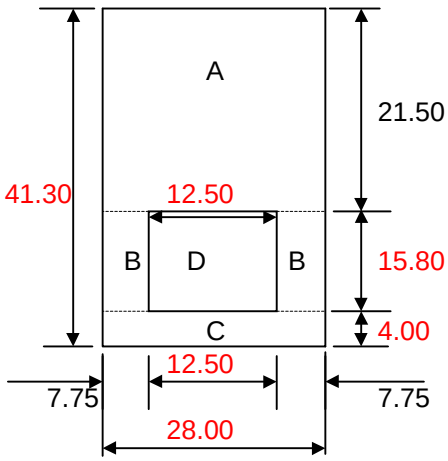

Note: For quantities change the RED values in the cells of the dimensioned cross section shown.

Cast in place concrete

A_g =	602.0	ft^2	
B_g =	244.9	ft^2	
C_g =	112.0	ft^2	
D_g =	197.5	ft^2	CULVERT
Total =	958.9	ft^2	

Tremie concrete (below "C")

132.0 ft^2

hght chk = 41.30 left
hght chk = 41.30 right

US lngth = 265.0 ft DS lngth = 240.0 ft

Lock Wall
typical

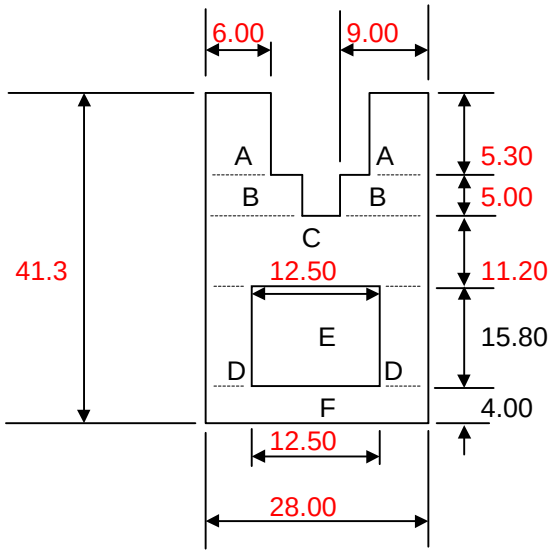

Cast in place concrete

A_w =	63.60	ft^2	
B_w =	90.00	ft^2	
C_w =	313.60	ft^2	
D_w =	244.90	ft^2	
E_w =	197.50	ft^2	CULVERT
F_w =	112.00	ft^2	
Total =	824.10	ft^2	

Tremie concrete (below "F")

132.0 ft^2

hght chk = 41.30 left
hght chk = 41.30 right

RS Wall = 1,050.0 ft LS Wall = 1,050.0 ft

LOCK AND DAM NO.12, LOCATION 4, TYPE A
1200'LOCK ALTERNATIVE (PILE FOUNDED)

Subject		Date
L/D 12 Location 4 Quantities for Type A Lock, Crane-In Construction		Sep 96
Computed by Michael Cummings	Checked	Sheet 2 of 6

Typical cell for cofferdam

Area = 1,736.0 ft^2

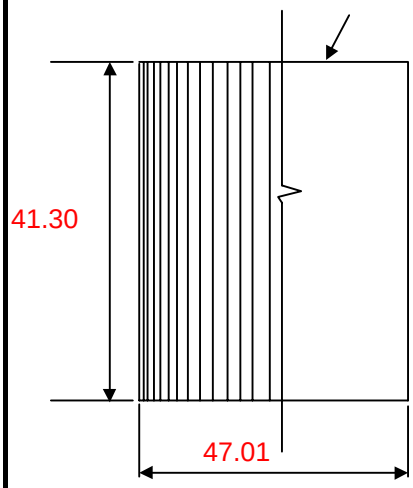

Pile type: PS31
Choose PSA23, PS27.5, or PS31

Area between cells:

Area =	773.0	ft^2
Distance =	15.28	ft
Length =	1.64	ft
Number in cell =	90	piles
No. in space =	20	piles
US Length =	2,650.0	ft
DS Length =	2,650.0	ft

LOCK CHAMBER WALLS:

A. WALL MONOLITHS

1. River side walls

(a) Cast in place concrete

Volume = 32,048.3 CY

(b) Precast concrete

Volume = .0 CY

1. Land side walls

(a) Cast in place concrete

Volume = 32,048.3 CY

(b) Precast concrete

Volume = .0 CY

B. GATE MONOLITHS

1. Upstream cast in place concrete

Volume = 18,822.9 CY

2. Upstream precast concrete

Volume = .0 CY

1. Downstream cast in place concrete

Volume = 17,047.1 CY

2. Downstream precast concrete

Volume = .0 CY

LOCK AND DAM NO.12, LOCATION 4, TYPE A
1200'LOCK ALTERNATIVE (PILE FOUNDED)

Subject		Date
L/D 12 Location 4 Quantities for Type A Lock, Crane-In Construcion		Sep 96
Computed by Michael Cummings	Checked	Sheet 3 of 6

COFFERDAMS:

1. Cofferdam #1, Upstream

Number = 43.0 cells

Total = 9,460.0 piles

2. Cofferdam #2, Upstream

Number = 43.0 cells

Total = 330,054.0 CY fill volume

SILLS:

Length = 120.0 ft
Width = 111.0 ft
Height = 8.0 ft

Volume = 7,893.3 CY

SUMMARY:

CONCRETE (Cast in place)

A.	Lockwalls =	64,096.7 CY
B.	Gate monoliths =	35,870.0 CY
C.	Sills =	7,893.3 CY
D.	Tremie =	12,735.6 CY
	Total =	107,900.0 CY

PRECAST CONCRETE

A.	Lockwalls =	.0 CY
B.	Gate monoliths =	.0 CY
	Total =	.0 CY

SHEETPILES

A.	Required number for cofferdams =	9,460.0 piles
B.	Required number for walls =	0 piles
	Total =	9,500.0 piles
	Total =	643,500.0 SF of piling

FILL

A.	Required fill for cofferdams =	330,054.0 CY
	Total =	330,100.0 CY

LOCK AND DAM NO.12, LOCATION 4, TYPE A
1200'LOCK ALTERNATIVE (PILE FOUNDED)

Subject		Date
L/D 12 Location 4 Quantities for Type B Lock, Crane-In Construcion		Sep 96
Computed by Michael Cummings	Checked	Sheet 4 of 6

Upstream Guidewall Cell, Small

(typical)

Area = 700.0 SF

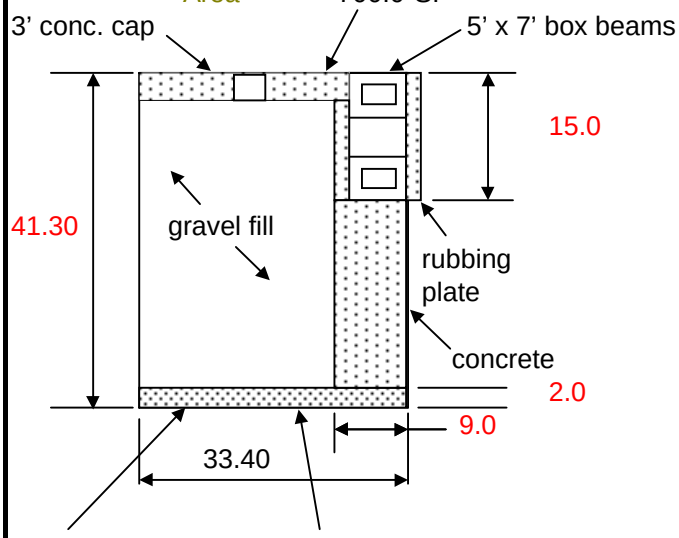

Area = 876.0 SF

Note: For quantities change the RED values in the cells of the dimensioned cross section shown.

Cast-in-Place Concrete

3' conc. cap	=	77	CY
concrete	=	197	CY
Total	=	274	CY
for 7 cells	=	1,916	CY
Tremie concrete	=	65	CY
for 7 cells	=	455	CY

Precast Concrete

5'x7' beam	=	889	CY
rubbing pl.	=	500	CY
Total	=	1,389	CY
Gravel fill	=	944	CY
for 7 cells	=	6,607	CY
Sheet Piling	=	4,334	SF
for 7 cells	=	30,335	SF

Upstream Guidewall Cell, Large

(typical)

Area = 2,124.0 SF

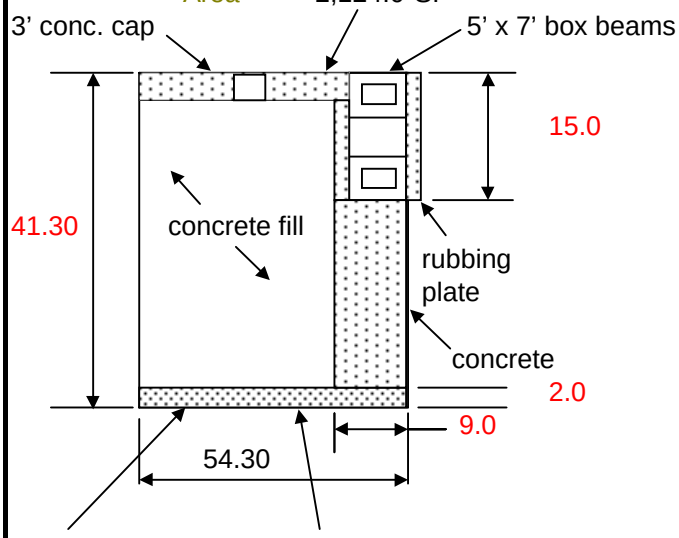

Area = 2,316.0 SF

Note: For quantities change the RED values in the cells of the dimensioned cross section shown.

Cast-in-Place Concrete

3' conc. cap	=	235	CY
concrete	=	252	CY
Total	=	487	CY
Tremie concrete	=	172	CY
Permanent Cell Fill		2,854	CY
Sheet Piling	=	7,045	SF

LOCK AND DAM NO.12, LOCATION 4, TYPE A
1200'LOCK ALTERNATIVE (PILE FOUNDED)

Subject		Date
L/D 12 Location 4 Quantities for Type B Lock, Crane-In Construcion		Sep 96
Computed by Michael Cummings	Checked	Sheet 5 of 6

Downstream Guidewall Cell, Small

(typical)

Area = 700.0 SF

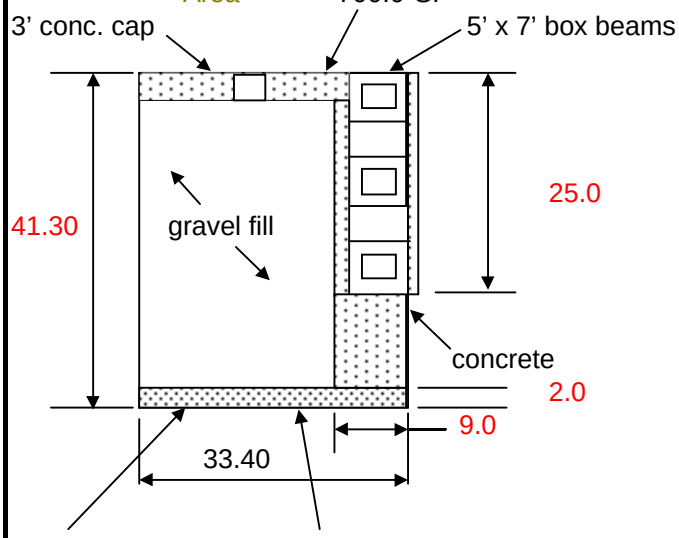

Area = 876.0 SF

Note: For quantities change the RED values in the cells of the dimensioned cross section shown.

Cast-in-Place Concrete			
3' conc. cap	=	77	CY
concrete	=	149	CY
Total	=	225	CY
for 14 cells	=	3,156	CY
Tremie concrete	=	65	CY
for 14 cells	=	910	CY
Precast Concrete			
5'x7' beam	=	2,667	CY
rubbing pl.	=	1,667	CY
Total	=	4,333	CY
Gravel fill	=	944	CY
for 14 cells	=	13,213	CY
Sheet Piling	=	4,334	SF
for 14 cells	=	60,670	SF

Downstream Guidewall Cell, Large

(typical)

Area = 2,124.0 SF

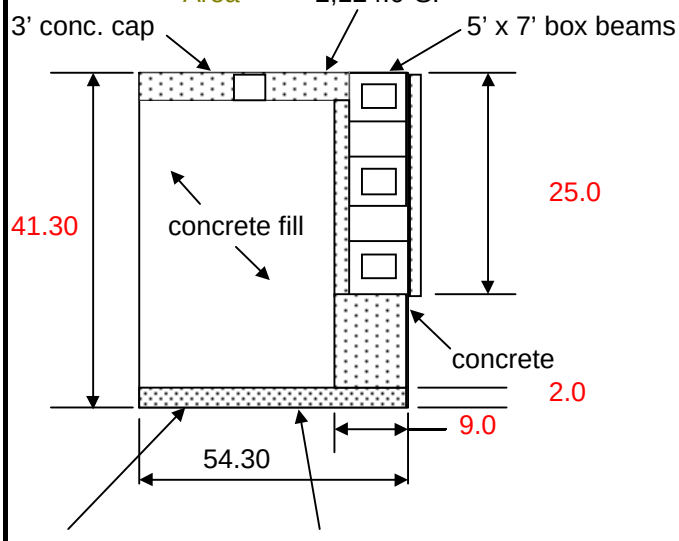

Area = 2,316.0 SF

Note: For quantities change the RED values in the cells of the dimensioned cross section shown.

Cast-in-Place Concrete			
3' conc. cap	=	235	CY
concrete	=	413	CY
Total	=	648	CY
Tremie concrete	=	172	CY
Permanent Cell Fill		2,854	CY
Sheet Piling	=	7,045	SF

L124ap

LOCK AND DAM NO.12, LOCATION 4, TYPE A
1200'LOCK ALTERNATIVE (PILE FOUNDED)

Subject		Date
L/D 12 Location 4 Quantities for Type B Lock, Crane-In Construcion		Sep 96
Computed by Michael Cummings	Checked	Sheet 6 of 6

LOCK GUIDEWALLS :

A. UPSTREAM GUIDEWALL

1. Cast-in-place concrete

Volume = 2,403 CY

2. Precast concrete

Volume = 1,389 CY

3. Gravel Fill

Volume = 6,607 CY

4. Sheet Piling

Area = 37,380 SF

5. Permanent Cell Fill

Volume = 2,854 CY

6. Tremie Concrete

Volume = 627 CY

B. DOWNSTREAM GUIDEWALL

1. Cast-in-place concrete

Volume = 3,804 CY

2. Precast concrete

Volume = 4,333 CY

3. Gravel Fill

Volume = 13,213 CY

4. Sheet Piling

Area = 67,715 SF

5. Permanent Cell Fill

Volume = 2,854 CY

6. Tremie Concrete

Volume = 1,082 CY

Guidewall Summary

Total Cast-in-Place Concrete	6,207	CY
Total Precast Concrete	5,722	CY
Total Gravel Fill	19,820	CY
Total Sheet Piling	105,096	SF
Total Permanent Cell Fill	5,709	CY
Total Tremie Concrete	1,709	CY

LOCK AND DAM NO.12, LOCATION 4, TYPE B
1200' LOCK ALTERNATIVE (PILE FOUNDED)

ACCOUNT CODE	ITEM	QUANTITY	UNIT	UNIT PRICE ($'s)	AMOUNT ($1,000's)
01.	**LANDS AND DAMAGES**				
	REAL ESTATE	1	JOB	SUM	200
04.	**DAMS**				
	DEMOLITION (TAINTER GATE BAY NO.1)	1	JOB	SUM	1,504
	CONCRETE (TIE-IN TO EXISTING LOCK)	362	CY	280.00	101
	MISCELLANEOUS	1	JOB	SUM	150
	REPLACEMENT TAINTER GATE	1	JOB	SUM	25,000
	04 DAMS SUBTOTAL				26,755
05.	**LOCKS**				
	SITEWORK				
	MOBILIZATION	1	JOB	SUM	8,000
	DEMOLITION (AUXILIARY LOCK AREA)	1	JOB	SUM	5,700
	DREDGING	86,500	CY	4.50	389
	ROCK EXCAVATION	50,000	CY	45	2,250
	EXTENSION OF EXISTING UPSTREAM GUIDEWALL	1	JOB	SUM	7,700
	SCOUR PROTECTION	1	JOB	SUM	2,305
	RIP RAP	143,700	TON	20.00	2,874
	CAPSTONE	22,000	TON	25.00	550
	GEOTEXTILE	8,960	SY	6.00	6
	STONE FILL	6,950	TON	15.00	104
	COFFERDAM FILL	167,280	CY	14.50	2,426
	COFFERDAM DEWATERING	1	JOB	SUM	8,000
	COFFERDAM REMOVAL	1	JOB	SUM	81
	MARINE FACILITIES AND SPECIAL COSTS	1	JOB	SUM	5,675
	CONCRETE				
	STRUCTURAL GROUTING	1	JOB	SUM	5,400
	CAST IN PLACE REINFORCED CONCRETE	75,700	CY	280	21,196
	CHAMBER WALLS		CY	160	0
	CAST IN PLACE CONNECTIONS		CY	725	0
	PRECAST CONC. CHAMBER AND APPROACH WALL		CY	400	0
	TREMIE CONCRETE BASE		CY	165	0
	TREMIE CONCRETE WALL		CY	175	0
	POST TENSION STEEL		LB	2.5	0
	FURNISH AND SET LANDING PADS	24	EA	19,000	456
	SET PRECAST WALL UNITS	88	EA	16,000	1,408
	FLOAT IN AND SET FLOOR UNITS	11	EA	40,000	440
	STEEL REINFORCEMENT	9,462,500	LB	0.75	7,097
	STEEL CULVERT PIPE				
	GRAVEL FILL	9,700	CY	15.00	146
	METALS				
	SHEET PILING (CLOSURE, PS31)	24,300	SF	25.00	608
	STRUCTURAL STEEL (GATES, VALVES, TRASHRACKS)	1	JOB	SUM	3,250
	STRUCTURAL STEEL (MISCELLANEOUS - LADDERS, ETC.)	1	JOB	SUM	2,500
	ELECTRICAL				
	ELECTRICAL SYSTEM	1	JOB	SUM	4,700
	MECHANICAL				
	GATE AND VALVE OPERATING MACHINERY	1	JOB	SUM	2,750
	MECHANICAL SYSTEMS	1	JOB	SUM	3,200

LOCK AND DAM NO.12, LOCATION 4, TYPE B
1200' LOCK ALTERNATIVE (PILE FOUNDED)

	MISCELLANEOUS	1	JOB	SUM	9,022
	05 LOCKS SUBTOTAL				108,232
05.60.	**GUIDEWALLS**				
	CONCRETE				
	CAST IN PLACE REINFORCED CONCRETE	4,263	CY	280.00	1,194
	PRECAST CONCRETE BEAMS (W/REINFORCEMENT)	8,960	LF	1,170.00	10,483
	TREMIE CONCRETE	1,709	CY	210.00	359
	METALS				
	SHEETPILING FOR CELLS (PS31)	75,323	SF	25.00	1,883
	STRUCTURAL STEEL	1	JOB	SUM	900
	05.60 GUIDEWALLS SUBTOTAL				14,819
09.	**CHANNEL WORK**	1	JOB	SUM	6,520
	PROJECT SUBTOTAL				156,526
	CONTINGENCIES 25%				39,132
	PROJECT SUBTOTAL WITH CONTINGENCIES				196,000
30.	**PLANNING, ENGINEERING, AND DESIGN (10%)**				20,000
31.	**CONSTRUCTION MANAGEMENT (10%)**				20,000
	PROJECT TOTAL				236,000

LOCK AND DAM NO.12, LOCATION 4, TYPE B
1200' LOCK ALTERNATIVE (PILE FOUNDED)

Subject	PILE FOUNDED LOCKS: L/D 12 Location 4 Quantities for Type B Lock, Crane-In Construction	Date Sep 96
Computed by Michael Cummings	Checked	Sheet 1 of 7

Crane - In Gate Monolith

Note: For quantities change the Red values in the cells of the dimensioned cross section shown.

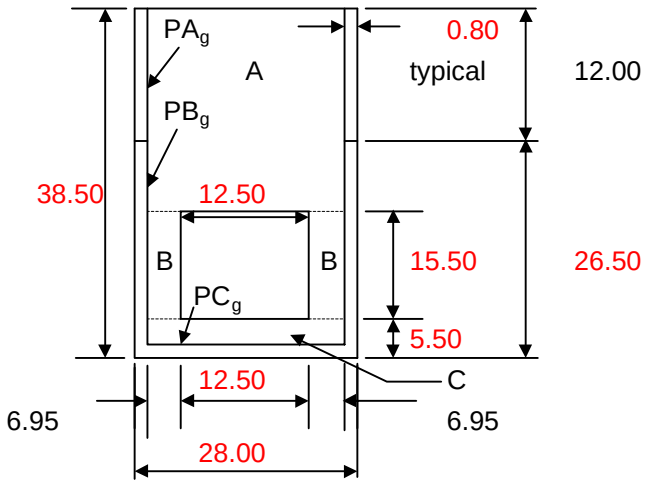

Cast in place concrete

A_g =	462.0	ft^2	
B_g =	215.5	ft^2	
C_g =	124.1	ft^2	
D_g =	193.8	ft^2	CULVERT
Total =	801.5	ft^2	

Pre-cast concrete

PA_g =	19.2	ft^2
PB_g =	42.4	ft^2
PC_g =	21.1	ft^2
Total =	82.7	ft^2

hght chk = 38.50 left
hght chk = 38.50 right

DS lngth = 250.0 ft

Crane - in Lock Wall

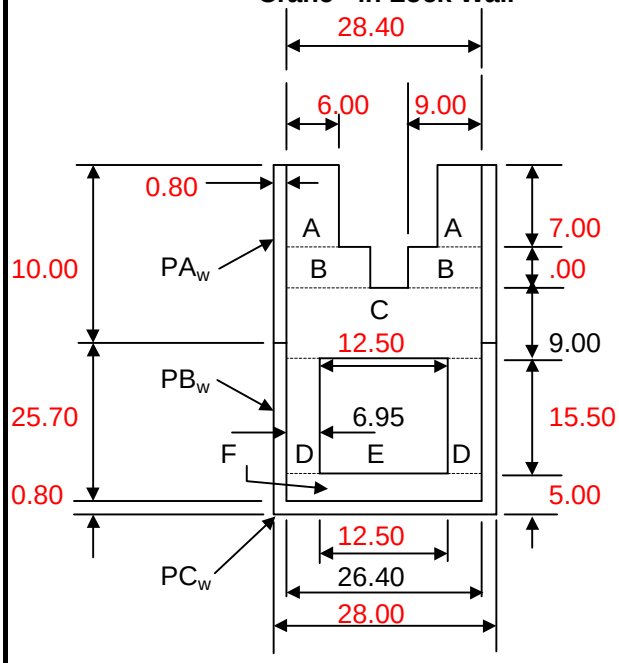

Cast in place concrete

A_w =	84.00	ft^2	
B_w =	.00	ft^2	
C_w =	255.60	ft^2	
D_w =	215.45	ft^2	
E_w =	193.75	ft^2	CULVERT
F_w =	110.88	ft^2	
Total =	665.93	ft^2	

Pre-cast concrete

PA_w =	16.0	ft^2
PB_w =	42.4	ft^2
PC_w =	21.1	ft^2
Total =	79.5	ft^2

hght chk = 36.50 left
hght chk = 36.50 right

RS Wall = 975.0 ft LS Wall = 465.0 ft

L124bp

LOCK AND DAM NO.12, LOCATION 4, TYPE B
1200' LOCK ALTERNATIVE (PILE FOUNDED)

Subject		Date
L/D 12 Location 4 Quantities for Type B Lock, Crane-In Construction		Sep 96
Computed by Michael Cummings	Checked	Sheet 2 of 7

Typical cell for cofferdam

Area = 1,512.0 ft^2

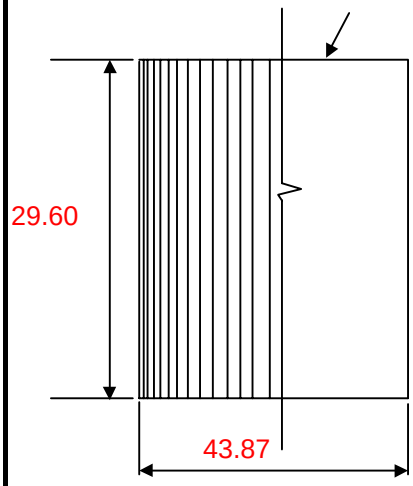

Pile type: PS31
Choose PSA23, PS27.5 or PS31

Area between cells:

Area =	694.0	ft^2
Distance =	14.66	ft
Length =	1.64	ft
Number in cell =	84	piles
No. in space =	19	piles
US Length =	110.0	ft
DS Length =	110.0	ft

Cast In Place Gate Monolith

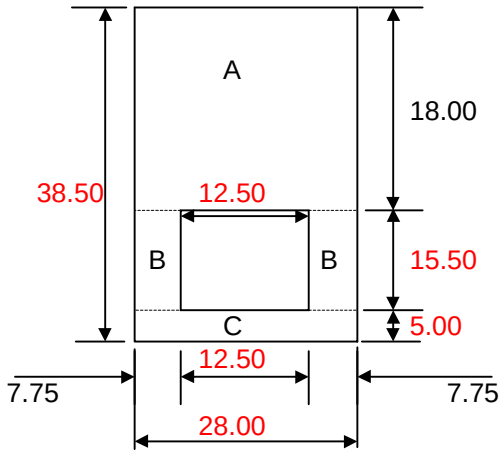

Note: For quantities change the RED values in the cells of the dimensioned cross section shown.

Cast in place concrete

A_g =	504.0	ft^2	
B_g =	240.3	ft^2	
C_g =	140.0	ft^2	
D_g =	193.8	ft^2	CULVERT
Total =	884.3	ft^2	

US lngth = 265.0 ft

hght chk =	38.50	left
hght chk =	38.50	right

LOCK AND DAM NO.12, LOCATION 4, TYPE B
1200' LOCK ALTERNATIVE (PILE FOUNDED)

Subject		Date
L/D 12 Location 4 Quantities for Type B Lock, Crane-In Construction		Sep 96
Computed by Michael Cummings	Checked	Sheet 3 of 7

LOCK CHAMBER WALLS:

A. WALL MONOLITHS

1. River side walls

(a) Cast in place concrete

Volume = 24,047.5 CY

(b) Precast concrete

Volume = 2,871.6 CY

1. Land side walls

(a) Cast in place concrete

Volume = 11,468.8 CY

(b) Precast concrete

Volume = 1,369.5 CY

B. GATE MONOLITHS

1. Upstream cast in place concrete

Volume = 17,357.5 CY

2. Upstream precast concrete

Volume = .0 CY

1. Downstream cast in place concrete

Volume = 14,843.1 CY

2. Downstream precast concrete

Volume = 1,531.9 CY

COFFERDAMS:

1. Cofferdam #1, Upstream

Number = 2.0 cells

Total = 412.0 piles

2. Cofferdam #2, Upstream

Number = 2.0 cells

Total = 9,674.0 CY fill volume

SILLS:

Length = 120.0 ft
Width = 111.0 ft
Height = 8.0 ft

Volume = 7,893.3 CY

Subject		Date
L/D 12 Location 4 Quantities for Type B Lock, Crane-In Construcion		Sep 96
Computed by Michael Cummings	Checked	Sheet 4 of 7

SUMMERY:

CONCRETE (Cast in place)

A.	Lockwalls =	35,516.3	CY
B.	Gate monoliths =	32,200.6	CY
C.	Sills =	7,893.3	CY
	Total =	75,700.0	CY

PRECAST CONCRETE

A.	Lockwalls =	4,241.1	CY
B.	Gate monoliths =	1,531.9	CY
	Total =	5,800.0	CY

SHEETPILES

A.	Required number for cofferdams =	412.0	piles
B.	Required number for walls =	0	piles
	Total =	500.0	CY
	Total =	24,300.0	SF of piling

FILL

A.	Required fill for cofferdams =	9,674.0	CY
	Total =	9,700.0	CY

LOCK AND DAM NO.12, LOCATION 4, TYPE B
1200' LOCK ALTERNATIVE (PILE FOUNDED)

Subject		Date
L/D 12 Location 4 Quantities for Type B Lock, Crane-In Construcion		Sep 96
Computed by Michael Cummings	Checked	Sheet 5 of 7

Upstream Guidewall Cell, Small

(typical)

Area = 700.0 SF

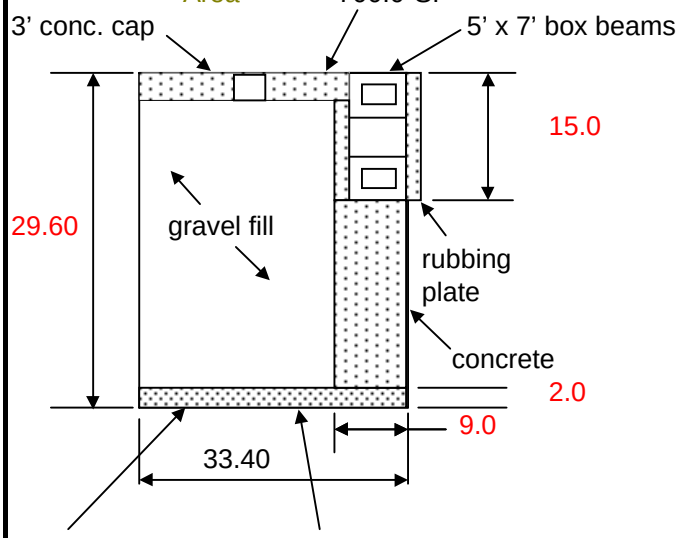

Area = 876.0 SF

Note: For quantities change the RED values in the cells of the dimensioned cross section shown.

Cast-in-Place Concrete			
3' conc. cap	=	77	CY
concrete	=	115	CY
Total	=	192	CY
for 7 cells	=	1,341	CY
Tremie concrete	=	65	CY
for 7 cells	=	455	CY
Precast Concrete			
5'x7' beam	=	889	CY
rubbing pl.	=	500	CY
Total	=	1,389	CY
Gravel fill	=	640	CY
for 7 cells	=	4,477	CY
Sheet Piling	=	3,106	SF
for 7 cells	=	21,741	SF

Upstream Guidewall Cell, Large

(typical)

Area = 2,124.0 SF

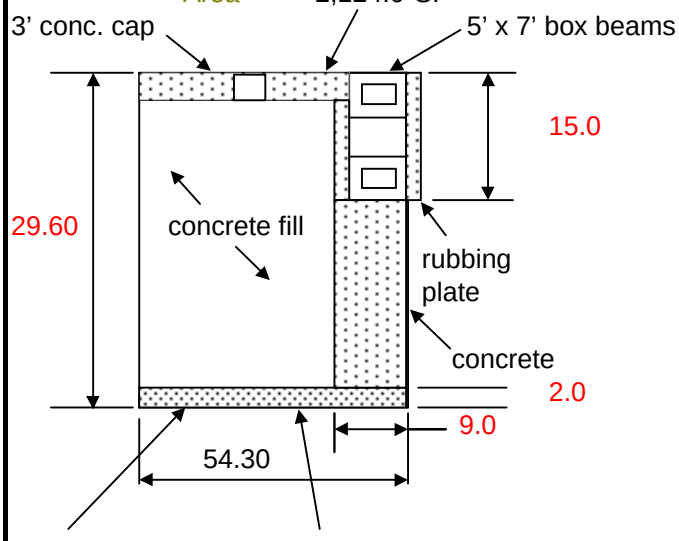

Area = 2,316.0 SF

Note: For quantities change the RED values in the cells of the dimensioned cross section shown.

Cast-in-Place Concrete			
3' conc. cap	=	235	CY
concrete	=	143	CY
Total	=	378	CY
Tremie concrete	=	172	CY
Permanent Cell Fill		1,934	CY
Sheet Piling	=	5,049	SF

L124bp

LOCK AND DAM NO.12, LOCATION 4, TYPE B
1200' LOCK ALTERNATIVE (PILE FOUNDED)

Subject		Date
L/D 12 Location 4 Quantities for Type B Lock, Crane-In Construcion		Sep 96
Computed by Michael Cummings	Checked	Sheet 6 of 7

Downstream Guidewall Cell, Small

(typical)

Area = 700.0 SF

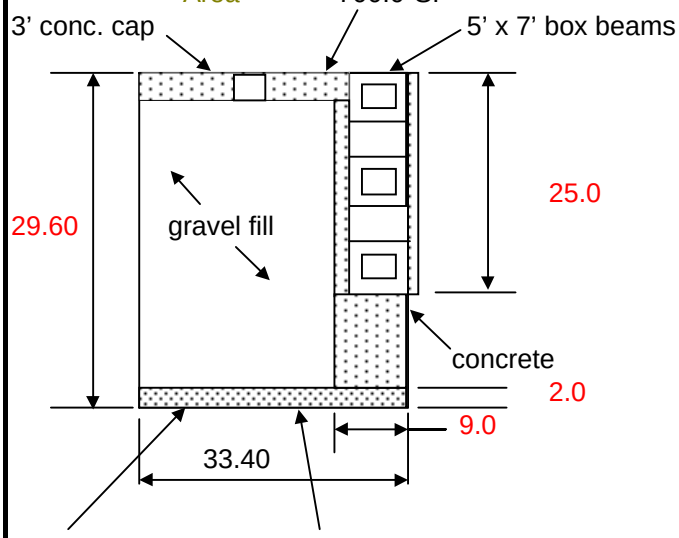

Area = 876.0 SF

Note: For quantities change the RED values in the cells of the dimensioned cross section shown.

Cast-in-Place Concrete			
3' conc. cap	=	77	CY
concrete	=	67	CY
Total	=	143	CY
for 14 cells	=	2,005	CY
Tremie concrete	=	65	CY
for 14 cells	=	910	CY
Precast Concrete			
5'x7' beam	=	2,667	CY
rubbing pl.	=	1,667	CY
Total	=	4,333	CY
Gravel fill	=	640	CY
for 14 cells	=	8,954	CY
Sheet Piling	=	3,106	SF
for 14 cells	=	43,483	SF

Downstream Guidewall Cell, Large

(typical)

Area = 2,124.0 SF

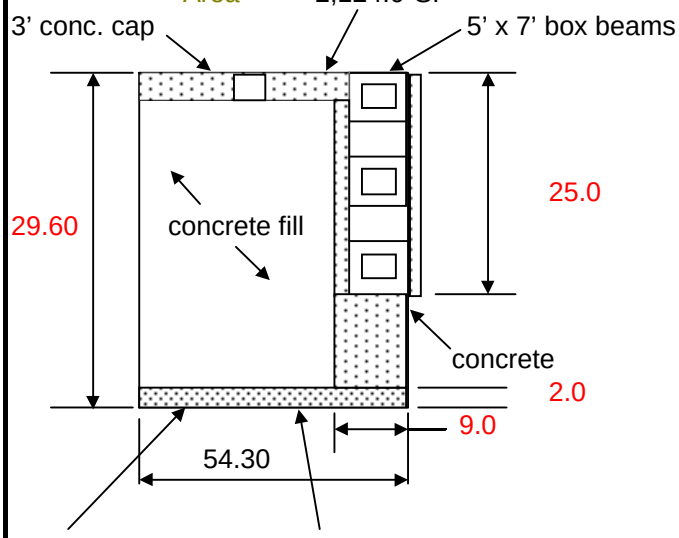

Area = 2,316.0 SF

Note: For quantities change the RED values in the cells of the dimensioned cross section shown.

Cast-in-Place Concrete			
3' conc. cap	=	235	CY
concrete	=	304	CY
Total	=	539	CY
Tremie concrete	=	172	CY
Permanent Cell Fill		1,934	CY
Sheet Piling	=	5,049	SF

L124bp

LOCK AND DAM NO.12, LOCATION 4, TYPE B
1200' LOCK ALTERNATIVE (PILE FOUNDED)

Subject		Date
L/D 12 Location 4 Quantities for Type B Lock, Crane-In Construcion		Sep 96
Computed by Michael Cummings	Checked	Sheet 7 of 7

LOCK GUIDEWALLS :

A. UPSTREAM GUIDEWALL

1. Cast-in-place concrete

Volume = 1,719 CY

2. Precast concrete

Volume = 1,389 CY

3. Gravel Fill

Volume = 4,477 CY

4. Sheet Piling

Area = 26,791 SF

5. Permanent Cell Fill

Volume = 1,934 CY

6. Tremie Concrete

Volume = 627 CY

B. DOWNSTREAM GUIDEWALL

1. Cast-in-place concrete

Volume = 2,544 CY

2. Precast concrete

Volume = 4,333 CY

3. Gravel Fill

Volume = 8,954 CY

4. Sheet Piling

Area = 48,532 SF

5. Permanent Cell Fill

Volume = 1,934 CY

6. Tremie Concrete

Volume = 1,082 CY

Guidewall Summary

Total Cast-in-Place Concrete	4,263	CY
Total Precast Concrete	5,722	CY
Total Gravel Fill	13,432	CY
Total Sheet Piling	75,323	SF
Total Permanent Cell Fill	3,869	CY
Total Tremie Concrete	1,709	CY

LOCK AND DAM NO.12, LOCATION 4, TYPE C,
1200' LOCK ALTERNATIVE (PILE FOUNDED)

ACCOUNT CODE	ITEM	QUANTITY	UNIT	UNIT PRICE ($'s)	AMOUNT ($1,000's)
01.	**LANDS AND DAMAGES**				
	REAL ESTATE	1	JOB	SUM	200
04.	**DAMS**				
	DEMOLITION (TAINTER GATE BAY NO.1)	1	JOB	SUM	1,504
	REPLACEMENT TAINTER GATE	1	JOB	SUM	25,000
	04 DAMS SUBTOTAL				26,504
05.	**LOCKS**				
	SITEWORK				
	MOBILIZATION	1	JOB	SUM	8,000
	DEMOLITION	1	JOB	SUM	1,910
	EXCAVATION	117,700	CY	4.50	530
	BACKFILL	160,000	CY	6.25	1,000
	CAPSTONE	52,660	TN	25.00	1,317
	SCOUR PROTECTION	1	JOB	SUM	2,300
	RIPRAP	143,700	TN	20.00	2,874
	STONE FILL	16,606	TN	15.00	249
	GEOTEXTILE	13,740	SY	6.00	82
	FOUNDATION/LOCK DEWATERING	1	JOB	SUM	3,000
	COFFERDAM REMOVAL	1	JOB	SUM	81
	MARINE FACILITIES, TEMP. MOORING STR.	1	JOB	SUM	3,900
	CONCRETE				
	STRUCTURAL GROUTING	1	JOB	SUM	5,400
	CAST IN PLACE REINFORCED CONCRETE	41,800	CY	217	9,071
	CAST IN PLACE CONNECTIONS	964	CY	725	699
	PRECAST FLOOR SLABS	3,398	CY	150	510
	PRECAST CONCRETE APPROACH WALLS	1,532	CY	400	613
	PRECAST CULVERTS	4,990	CY	600	2,994
	PRECAST RUB PANELS	54,375	SF	40	2,175
	TREMIE CONCRETE, BASE	19,130	CY	165	3,156
	TREMIE CONCRETE, WALLS	4,527	CY	175	792
	STEEL REINFORCEMENT	5,225,000	LB	0.75	3,919
	CELL FILL, GRAVEL	117,299	CY	10	1,173
	METALS				
	SHEET PILING	452,805	SF	25.00	11,320
	SHEET PILE BRACING	1	JOB	SUM	600
	FOUNDATION PILING AND TESTING	1	JOB	SUM	15,000
	STRUCTURAL STEEL (GATES, VALVES, ETC.)	1	JOB	SUM	11,600
	STRUCT. STEEL (MISCELLANEOUS - LADDERS, ETC.)	1	JOB	SUM	3,000
	ELECTRICAL				
	ELECTRICAL SYSTEM		JOB	SUM	4,700
	INSTRUMENTATION	1	JOB	SUM	1,250
	MECHANICAL				
	GATE AND VALVE OPERATING MACHINERY	1	JOB	SUM	2,750
	MECHANICAL SYSTEMS	1	JOB	SUM	3,200
	MISCELLANEOUS	1	JOB	SUM	1,950
	05 LOCKS SUBTOTAL				111,114

LOCK AND DAM NO.12, LOCATION 4, TYPE C,
1200' LOCK ALTERNATIVE (PILE FOUNDED)

05.60.	**GUIDEWALLS**				
	SITEWORK				
	EXCAVATION	118,490	CY	4.5	533
	BACKFILL	73,640	CY	10	736
	SCOUR PROTECTION	211,130	TON	15	3,167
	CONCRETE				
	42" DIAMETER PILES	6,360	LF	400	2,544
	CAST IN PLACE REINFORCED CONCRETE	5,825	CY	150	874
	PRECAST BEAMS	17,325	CY	500	8,663
	PRECAST BEAM SEATS	262	CY	1000	262
	TREMIE CONCRETE	1,709	CY	500	855
	PERMANENT CELL FILL (C0NCRETE)	5,347	CY	200	1,069
	GROUT FOR BEAMS	778	CY	1000	778
	STEEL REINFORCEMENT	2,921,700	LB	0.75	2,191
	GRAVEL FILL	18,564	CY	10	186
	METALS				
	SHEET PILING	99,243	SF	25.00	2,481
	FOUNDATION PILING	1	JOB	SUM	318
	POST TENSIONING	2,030	LF	30	61
	STRUCTURAL STEEL	1	JOB	SUM	4,060
	05.60 GUIDEWALLS SUBTOTAL				28,778
09.	**CHANNEL WORK**	1	JOB	SUM	2,974
	PROJECT SUBTOTAL				169,570
	CONTINGENCIES 25%				42,392
	PROJECT SUBTOTAL WITH CONTINGENCIES				211,962
30.	**PLANNING, ENGINEERING, AND DESIGN (10%)**				21,000
31.	**CONSTRUCTION MANAGEMENT (10%)**				21,000
	PROJECT TOTAL				$ 254,000

LOCK AND DAM NO.12, LOCATION 4, TYPE C,
1200' LOCK ALTERNATIVE (PILE FOUNDED)

Subject	PILE FOUNDED LOCKS: 1200 ft lock L/D 12 Location 4 Quantities for Type C Lock	Date OCT 1996
Computed by Michael Cummings	Checked	Sheet 1 of 7

Gate Monolith
(typical)

Note: For quantities change the RED values in the cells of the dimensioned cross section shown.

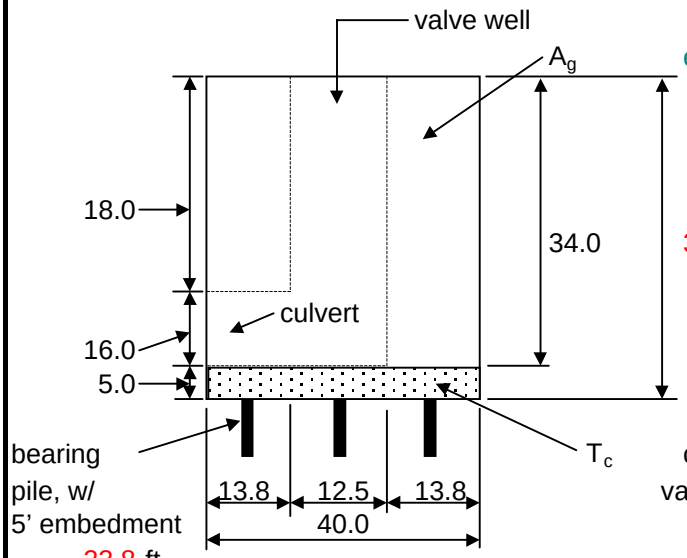

Cast in place concrete

A_g =	15,358.5	CY	U.S.
A_g =	18,536.3	CY	D.S.
Total =	33,894.8	CY	

Tremie concrete

T_c = 10,203.7 CY

The culverts are subtracted gross volume

	width	length	heighth	
culvert =	12.5	16.0	50.0	CF
valve well =	12.5	16.0	13.8	CF

23.8 ft

US gates length = 137.0 ft DS gates length = 164.5 ft

hght chk =	39.00	left
hght chk =	39.00	right

Lock Wall

Note: For quantities change the RED values in the cells of the dimensioned cross section

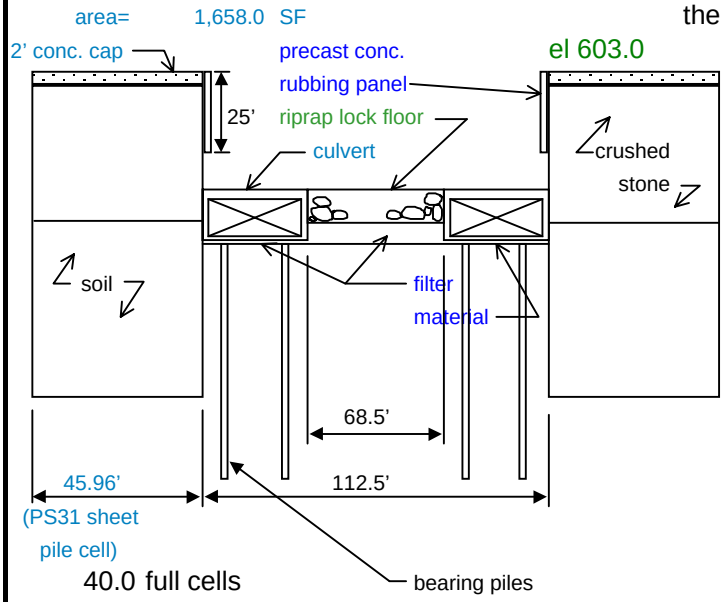

Cast-in-place concrete
2' concrete cap
Volume= 1,706.2 CY
Pre-cast concrete
precast rubbing panel
Area= 54,350.0 SF
Sheet pile cells
sheet piling
Area= 452,805.2 SF
Sheet pile cell fill
gravel
Volume= 117,299 CY

40.0 full cells
4.0 half cells
42.0 filler cells

53.8 ft total length 23.8 ft

RS Wall = 1,087.5 ft LS Wall = 1,087.5 ft

hght chk =	.00	left
hght chk =	.00	right

L124cp

LOCK AND DAM NO.12, LOCATION 4, TYPE C,
1200' LOCK ALTERNATIVE (PILE FOUNDED)

Subject	PILE FOUNDED LOCKS: 1200 ft lock L/D 12 Location 4 Quantities for Type C Lock	Date OCT 1996
Computed by Michael Cummings	Checked	Sheet 2 of 7

Floor

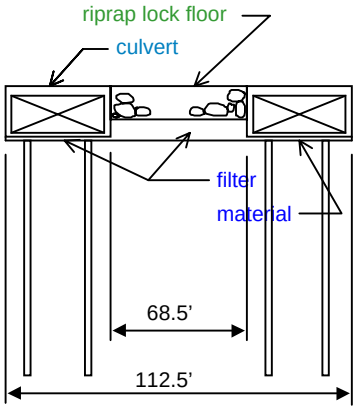

Riprap floor quantity
Volume= 11,956.7 CY
or 16,739.3 TONS

Filter material quantity
Volume= 12,932.1 CY
or 18,105.0 TONS

Bearing piles
precast floor slabs= 1,296.0 LF
precast culvert= 4,896.0 LF
Total Bearing Pile 6,192.0 LF

Length of floor = 1,270.0 ft width of floor = 73.0 ft

Note: For quantities change the RED values in the cells of the dimensioned cross section shown.

US Wall = 994.0 ft DS Wall = 1,016.0 ft

LOCK AND DAM NO.12, LOCATION 4, TYPE C,
1200' LOCK ALTERNATIVE (PILE FOUNDED)

Subject	PILE FOUNDED LOCKS: 1200 ft lock L/D 12 Location 4 Quantities for Type C Lock	Date OCT 1996
Computed by Michael Cummings	Checked	Sheet 3 of 7

cofferdam cell
typical
Area = 1,963.0 ft^2

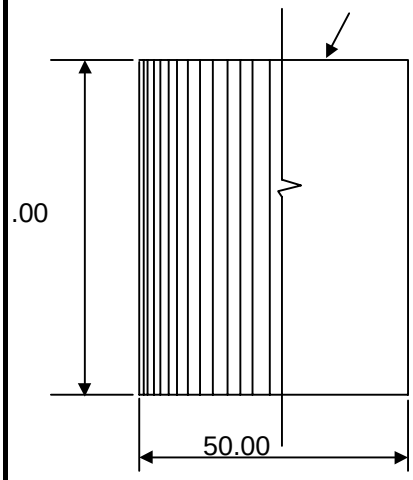

Note: For quantities change the RED values in the cells of the dimensioned cross section shown.

Pile type: PS31
Choose PSA23, PS27.5, or PS31

Area between cells:

Area =	855.0	SF
Distance =	15.91	ft
Length =	1.641	ft
Number in cell =	96	piles
No. in space =	21	piles

UPSTREAM

North or South length:	264.0	.4	modular numbers
East or West length:	330.0	.5	to aid in value search

DOWNSTREAM

North or South length:	264.0	.4	modular numbers
East or West length:	330.0	.5	to aid in value search

US	Total number of cells:	9.0	DS	Total number of cells:	9.0
US	Total number of cells:	11.0	DS	Total number of cells:	11.0

LOCK CHAMBER WALLS:

A. WALL MONOLITHS

1. River side walls
(a) Cast in place concrete
Volume = #REF! CY
(b) Tremie concrete
Volume = ######## CY
(c) Pre-cast concrete
Volume = .0 CY
(d) Pre-cast concrete (approach wall)
Volume = 0.0 CY
(e) Tremie concrete (approach wall)
Volume = - CY

1. Land side walls
(a) Cast in place concrete
Volume = #REF! CY
(b) Tremie concrete
Volume = ######## CY
(c) Pre-cast concrete
Volume = .0 CY
(d) Pre-cast concrete (approach wall)
Volume = 0.0 CY
(e) Tremie concrete (approach wall)
Volume = - CY

B. GATE MONOLITHS

1. Upstream cast in place concrete
Volume = 15,358.5 CY
Piles = 1500 LF

1. Downstream cast in place concrete
Volume = 18,536.3 CY
Piles = 1700 LF

LOCK AND DAM NO.12, LOCATION 4, TYPE C,
1200' LOCK ALTERNATIVE (PILE FOUNDED)

Subject	PILE FOUNDED LOCKS: 1200 ft lock L/D 12 Location 4 Quantities for Type C Lock	Date OCT 1996
Computed by Michael Cummings	Checked	Sheet 4 of 7

SILLS:

Length = 120.0 ft **Volume =** 7,893.0 CY of CIP concrete
111.0 ft
8.0 ft

COFFERDAM CELLS:

Upstream riverside
Total = piles
Total = SF of piling

Downstream riverside
Total = piles
Total = SF of piling

SUMMARY:

Lockwalls:

CONCRETE (Precast)
A. Lockwalls = - CY
B. Approach walls = - CY **Total =** - CY

CONCRETE (CIP, Cast in place)
A. Lockwalls = CY
B. Gate mono's = 33,894.8 CY
C. Sills = 7,893.0 CY **Total =** 41,800.0 CY

CONCRETE (Tremie)
A. Lockwalls = ########
B. Approach walls = - **Total =** ######## CY

HP PILING **Total =** .0 LF

BEARING PILES:
Total = 55,000.0 LF

Lock Floor:

CONCRETE:
A. Tremie concrete = .0 CY
B. Precast = .0 CY

BEARING PILES:
Total = 6,192.0 LF

Lockwall Sheet Pile Cells:

A. SHEETPILES
Total Area = 452,805 SF

B. FILL
Total Volume = 117,299 CY

LOCK AND DAM NO.12, LOCATION 4, TYPE C,
1200' LOCK ALTERNATIVE (PILE FOUNDED)

Subject	PILE FOUNDED LOCKS: L/D 12 Location 4 Quantities for Type B Lock, Crane-In Construcion	Date OCT 1996
Computed by Michael Cummings	Checked	Sheet 5 of 7

Upstream Guidewall Cell, Small

(typical)

Area = 700.0 SF

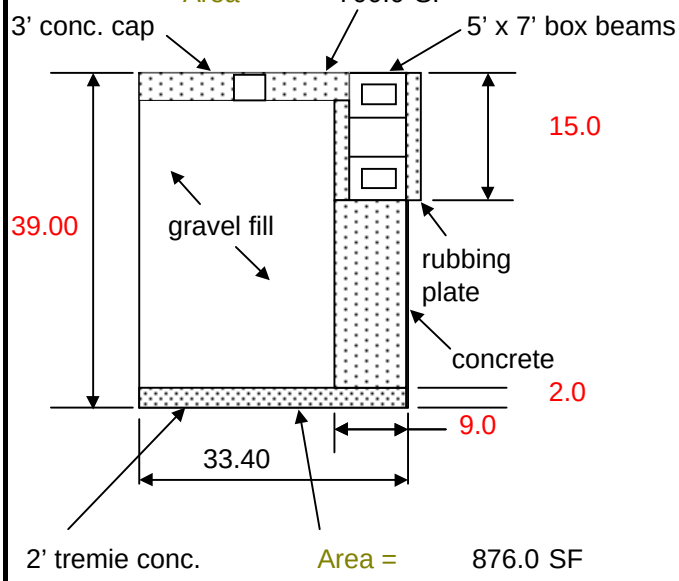

Area = 876.0 SF

Note: For quantities change the RED values in the cells of the dimensioned cross section shown.

Cast-in-Place Concrete			
3' conc. cap	=	77	CY
concrete	=	181	CY
Total	=	258	CY
for 7 cells	=	1,803	CY
Tremie concrete	=	65	CY
for 7 cells	=	455	CY
Precast Concrete			
5'x7' beam	=	889	CY
rubbing pl.	=	500	CY
Total	=	1,389	CY
Gravel fill	=	884	CY
for 7 cells	=	6,188	CY
Sheet Piling	=	4,092	SF
for 7 cells	=	28,646	SF

Upstream Guidewall Cell, Large

(typical)

Area = 2,124.0 SF

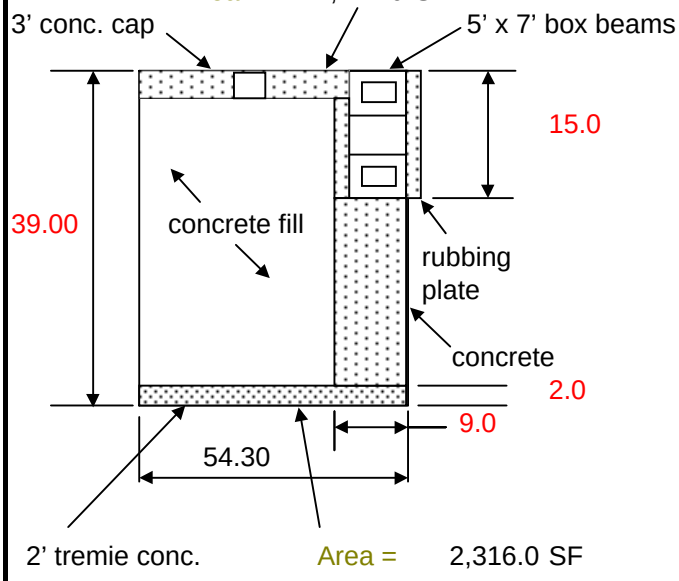

Area = 2,316.0 SF

Note: For quantities change the RED values in the cells of the dimensioned cross section shown.

Cast-in-Place Concrete			
3' conc. cap	=	235	CY
concrete	=	230	CY
Total	=	465	CY
Tremie concrete	=	172	CY
Permanent Cell Fill		2,673	CY
Sheet Piling	=	6,653	SF

LOCK AND DAM NO.12, LOCATION 4, TYPE C,
1200' LOCK ALTERNATIVE (PILE FOUNDED)

Subject	PILE FOUNDED LOCKS: L/D 12 Location 4 Quantities for Type B Lock, Crane-In Construcion	Date OCT 1996
Computed by Michael Cummings	Checked	Sheet 6 of 7

Downstream Guidewall Cell, Small

(typical)

Area = 700.0 SF

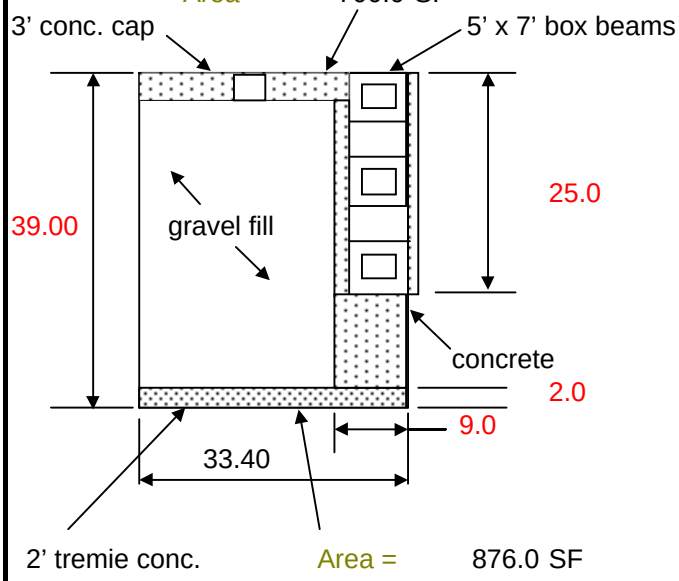

Area = 876.0 SF

Note: For quantities change the RED values in the cells of the dimensioned cross section shown.

Cast-in-Place Concrete			
3' conc. cap	=	77	CY
concrete	=	133	CY
Total	=	209	CY
for 14 cells	=	2,930	CY
Tremie concrete	=	65	CY
for 14 cells	=	910	CY
Precast Concrete			
5'x7' beam	=	2,667	CY
rubbing pl.	=	1,667	CY
Total	=	4,333	CY
Gravel fill	=	884	CY
for 14 cells	=	12,376	CY
Sheet Piling	=	4,092	SF
for 14 cells	=	57,291	SF

Downstream Guidewall Cell, Large

(typical)

Area = 2,124.0 SF

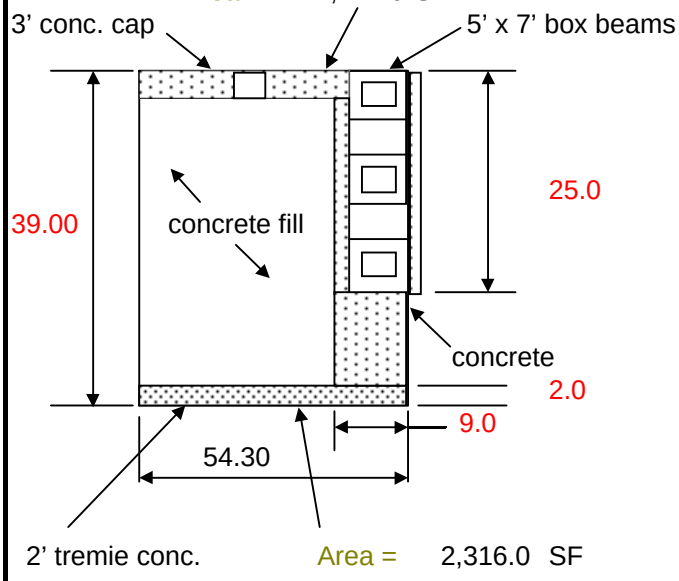

Area = 2,316.0 SF

Note: For quantities change the RED values in the cells of the dimensioned cross section shown.

Cast-in-Place Concrete			
3' conc. cap	=	235	CY
concrete	=	391	CY
Total	=	626	CY
Tremie concrete	=	172	CY
Permanent Cell Fill		2,673	CY
Sheet Piling	=	6,653	SF

LOCK AND DAM NO.12, LOCATION 4, TYPE C,
1200' LOCK ALTERNATIVE (PILE FOUNDED)

Subject	PILE FOUNDED LOCKS: L/D 12 Location 4 Quantities for Type B Lock, Crane-In Construcion	Date OCT 1996
Computed by Michael Cummings	Checked	Sheet 7 of 7

LOCK GUIDEWALLS :

A. UPSTREAM GUIDEWALL

1. Cast-in-place concrete

Volume = 2,269 CY

2. Precast concrete

Volume = 1,389 CY

3. Gravel Fill

Volume = 6,188 CY

4. Sheet Piling

Area = 35,299 SF

5. Permanent Cell Fill

Volume = 2,673 CY

6. Tremie Concrete

Volume = 627 CY

B. DOWNSTREAM GUIDEWALL

1. Cast-in-place concrete

Volume = 3,556 CY

2. Precast concrete

Volume = 4,333 CY

3. Gravel Fill

Volume = 12,376 CY

4. Sheet Piling

Area = 63,944 SF

5. Permanent Cell Fill

Volume = 2,673 CY

6. Tremie Concrete

Volume = 1,082 CY

Guidewall Summary

Total Cast-in-Place Concrete	5,825	CY
Total Precast Concrete	5,722	CY
Total Gravel Fill	18,564	CY
Total Sheet Piling	99,243	SF
Total Permanent Cell Fill	5,347	CY
Total Tremie Concrete	1,709	CY

LOCK AND DAM NO. 11, LOCATION 2, TYPE B
(PILE-FOUNDED)

CCOUNT CODE	ITEM	QUANTITY	UNIT	UNIT PRICE ($'s)	AMOUNT ($1,000's)
01.	**LANDS AND DAMAGES**				
	REAL ESTATE	1	JOB	SUM	230
04.	**DAMS**				
	04 DAMS SUBTOTAL				0
05.	**LOCKS**				
	SITEWORK				
	MOBILIZATION	1	JOB	SUM	10,650
	DEMOLITION	1	JOB	SUM	1,910
	EXCAVATION	12,900	CY	4.5	58
	BACKFILL	22,000	CY	6.25	138
	WALL FILL	9,522	CY	10.00	95
	SCOUR PROTECTION	428	TN	20.00	9
	SCOUR STONE IN LOCK FLOOR	9,030	TN	25.00	226
	FOUNDATION/LOCK DEWATERING	1	JOB	SUM	3,000
	MARINE FACILITIES, TEMP. MOORING STR.	1	JOB	SUM	3,900
	CONCRETE				
	UNDERBASE GROUTING	5,297	CY	200	1,059
	CAST IN PLACE REINFORCED CONCRETE	35,796	CY	217	7,768
	PRECAST CONCRETE	8,892	CY	400	3,557
	TREMIE CONCRETE	4,110	CY	165	678
	POST TENSION STEEL	135,000	LB	2.5	338
	FURNISH AND SET LANDING PADS	74	EA	19000	1,406
	SET PRECAST WALL UNITS	28	EA	16000	448
	FLOAT IN AND SET FLOOR UNITS	26	EA	16000	416
	FLOAT IN AND SET MITER GATE SILL	1	JOB	SUM	140
	STEEL REINFORCEMENT	2,147,800	LB	0.75	1,611
	METALS				
	SHEET PILING	47,110	SF	21.52	1,014
	WALL UNIT BRACING	1	JOB	SUM	250
	FOUNDATION PILING AND TESTING	1	JOB	SUM	5,300
	STRUCTURAL STEEL (GATES, VALVES, TRASHRACKS, BU	1	JOB	SUM	11,613
	STRUCTURAL STEEL (MISCELLANEOUS - LADDERS, ETC.	1	JOB	SUM	3,040
	ELECTRICAL				
	ELECTRICAL SYSTEM	1	JOB	SUM	4,700
	INSTRUMENTATION	1	JOB	SUM	1,250
	MECHANICAL				
	GATE AND VALVE OPERATING MACHINERY	1	JOB	SUM	2,750
	MECHANICAL SYSTEMS	1	JOB	SUM	3,200
	MISCELLANEOUS	1	JOB	SUM	1,950
	05 LOCKS SUBTOTAL				72,472
05.60.	**GUIDEWALLS**				
	SITEWORK				
	EXCAVATION	118,490	CY	4.5	533
	BACKFILL	73,640	CY	10	736
	SCOUR PROTECTION	18,900	TON	15	284
	CONCRETE				
	42" DIAMETER PILES	2,163	LF	400	865
	CAST IN PLACE REINFORCED CONCRETE	1,570	CY	150	236
	PRECAST BEAMS	10,900	CY	500	5,450
	PRECAST BEAM SEATS	165	CY	1000	165
	TREMIE CONCRETE	130	CY	500	65
	PERMANENT CELL FILL (C0NCRETE)	14,424	CY	200	2,885
	GROUT FOR BEAMS	490	CY	1000	490
	STEEL REINFORCEMENT	1,840,000	LB	0.75	1,380
	GRAVEL FILL	28,375	CY	10	284
	METALS				
	SHEET PILING FOR CELLS (PS31)	177,876	SF	25.00	4,447
	SHEET PILING CUTOFF WALL (PZ35)	71,963	SF	25.00	1,799
	FOUNDATION PILING		JOB	SUM	318
	POST TENSIONING	1,280	LF	30	38
	STRUCTURAL STEEL	1	JOB	SUM	4,060
	05.60 GUIDEWALLS SUBTOTAL				24,035
09.	**CHANNEL WORK**	1	JOB	SUM	3,835
	PROJECT SUBTOTAL				100,572
	CONTINGENCIES 25%				25,143
	PROJECT SUBTOTAL WITH CONTINGENCIES				126,000
30.	**PLANNING, ENGINEERING, AND DESIGN (10%)**				13,000
31.	**CONSTRUCTION MANAGEMENT (10%)**				13,000
	PROJECT TOTAL				$ 152,000

		QUANTITY CALCULATIONS									
	L/D 11 Location 2, Type B, Pile Founded							Sheet 1_ of 3____			
1	Remove existing sill down to										
	elev. 405.33	25	x	2	x	110	=	5,500.00	CF	203.70	CY
2	Remove existing 2' thick slab	95.25	x	2	x	110	=	20,955.00	CF	776.11	CY
3	Demolish existing guidewall, to										
	include timber crib and pile	502	x	30	x	53	=	798,180.00	CF	29,562.22	CY
4	Install sheet piling, PZ27	35.0	x	673	x	2	=	47,110.00	SF		
5	Excavation	3	x	172		675	=	348,300.00	CF	12,900.00	CY
6	Place scour stone	1.5	x	172	x	675	=	174,150.00	CF	6,450.00	CY
7	Place scour protection (riprap)	3	x	25	x	110	=	8,250.00	CF	305.56	CY
8	Install piling, HP 14 x 89										
	(54 ea per monolith @ 50' long										
	for 28 monoliths)	54	x	50	x	28	=	75,600.00	LF		
	Lockwall/floor connection										
9	HP14 x 117 stud w/welded ribs	23	x	2	=	46	EA				
	thixotropic grout @ HP studs	23.5	x	46	=	1,081.00	CF				
	thixotropic grout @ joints per ft	0.25	x	5	x	1296	=	1,620.00	CF		
10	Grout under base filling	2	x	650	x	110	=	143,000.00	CF	5,296.30	CY
11	Install piling, HP 14 x 89										
	(5 ea per floor unit @ 45' long										
	for 26 floor units	5	x	45	x	26	=	5,850.00	LF		
							=	26	EA		
12	Sand infill of floor units, large	((9.25' x 6.25' x2)+(19.75' x 6.25' x 4))x 510'					=	310,794.00	CF		
	" " " " " , small	((9.25' x 3' x 2)+(19.75' x 3' x 4)) x 66					=	19,305.00	CF		
								330,099.00	CF	12,225.89	CY
13	Concrete										
	riverward wall										
	-bottom lift (tremie)	4	x	23	x	603	=	55,476.00	CF		
	-2nd lift (reinforced)	4	x	28	x	603	=	67,536.00	CF		
	-3rd lift (reinforced)inside	12	x	7.75	x	603	=	56,079.00	CF		
	- " " " outside	12	x	7.75	x	603	=	56,079.00	CF		
	-4th lift (reinforced)	8.5	x	26	x	603	=	133,263.00	CF		
	-5th lift (reinforced)	4.3	x	28	x	603	=	72,601.20	CF		
	-6th lift (reinforced)outside	5.00	x	9	x	603	=	27,135.00	CF		
	- " " " inside	5.00	x	9	x	603	=	27,135.00	CF		
	-7th lift (reinforced)outside	8	x	9	x	603	=	43,416.00	CF		
								538,720.20		19,952.60	CY
14	Concrete										
	landward wall										
	-bottom lift (tremie)	4	x	23	x	603	=	55,476.00	CF		
	-2nd lift (reinforced)	4	x	28	x	603	=	67,536.00	CF		
	-3rd lift (reinforced)inside	12	x	7.75	x	603	=	56,079.00	CF		
	- " " " outside	12	x	7.75	x	603	=	56,079.00	CF		
	-4th lift (reinforced)	8.5	x	26	x	603	=	133,263.00	CF		
	-5th lift (reinforced)	4.3	x	28	x	603	=	72,601.20	CF		
	-6th lift (reinforced)outside	5.00	x	9	x	603	=	27,135.00	CF		
	- " " " inside	5.00	x	9	x	603	=	27,135.00	CF		
	-7th lift (reinforced)outside	8	x	9	x	603	=	43,416.00	CF		
								538,720.20		19,952.60	CY
	Total Concrete									39,905.20	CY
											Ld112bpf

LOCK AND DAM NO. 11, LOCATION 2, TYPE C
(PILE-FOUNDED)

CCOUNT CODE	ITEM	QUANTITY	UNIT	UNIT PRICE ($'s)	AMOUNT ($1,000's)
01.	**LANDS AND DAMAGES**				
	REAL ESTATE	1	JOB	SUM	230
04.	**DAMS**				
	04 DAMS SUBTOTAL				0
05.	**LOCKS**				
	SITEWORK				
	MOBILIZATION	1	JOB	SUM	10,650
	DEMOLITION	1	JOB	SUM	1,910
	EXCAVATION	9,351	CY	4.5	42
	BACKFILL	19,700	CY	10.00	197
	SCOUR PROTECTION	6,450	TN	15.00	97
	SCOUR STONE IN LOCK FLOOR	16,860	TN	15.00	253
	GRAVEL FILTER IN LOCK FLOOR	16,090	TN	20.00	322
	FOUNDATION/LOCK DEWATERING	1	JOB	SUM	3,000
	MARINE FACILITIES, TEMP. MOORING STR.	1	JOB	SUM	3,900
	CONCRETE				
	STRUCTURAL GROUTING	700	CY	200	140
	CAST IN PLACE REINFORCED CONCRETE	31,263	CY	217	6,784
	CAST IN PLACE CONNECTIONS	200	CY	725	145
	PRECAST CONCRETE	10,095	CY	400	4,038
	TREMIE CONCRETE, BASE .	3,574	CY	165	590
	PRECAST FLOOR PANELS	8,210	CY	286	2,348
	POST TENSION STEEL	185,300	LB	2.5	463
	FURNISH AND SET LANDING PADS	74	EA	19000	1,406
	SET PRECAST WALL UNITS	28	EA	16000	448
	FLOAT IN AND SET MITER GATE SILL	1	JOB	SUM	140
	STEEL REINFORCEMENT	1,876,000	LB	0.75	1,407
	METALS				
	SHEET PILING	47,110	SF	21.52	1,014
	WALL UNIT BRACING	1	JOB	SUM	250
	FOUNDATION PILING AND TESTING	1	JOB	SUM	3,487
	STRUCTURAL STEEL (GATES, VALVES, TRASHRACKS, B	1	JOB	SUM	11,613
	STRUCTURAL STEEL (MISCELLANEOUS - LADDERS, ET	1	JOB	SUM	3,040
	ELECTRICAL				
	ELECTRICAL SYSTEM	1	JOB	SUM	4,700
	INSTRUMENTATION	1	JOB	SUM	1,250
	MECHANICAL				
	GATE AND VALVE OPERATING MACHINERY	1	JOB	SUM	2,750
	MECHANICAL SYSTEMS	1	JOB	SUM	3,200
	MISCELLANEOUS	1	JOB	SUM	1,950
	05 LOCKS SUBTOTAL				71,533
05.60.	**GUIDEWALLS**				
	SITEWORK				
	EXCAVATION	118,490	CY	4.5	533
	BACKFILL	73,640	CY	10	736
	SCOUR PROTECTION	18,900	TON	15	284
	CONCRETE				
	42" DIAMETER PILES	2,163	LF	400	865
	CAST IN PLACE REINFORCED CONCRETE	1,570	CY	150	236
	PRECAST BEAMS	10,900	CY	500	5,450
	PRECAST BEAM SEATS	165	CY	1000	165
	TREMIE CONCRETE	130	CY	500	65
	PERMANENT CELL FILL (C0NCRETE)	14,235	CY	200	2,847
	GROUT FOR BEAMS	490	CY	1000	490
	STEEL REINFORCEMENT	1,840,000	LB	0.75	1,380
	GRAVEL FILL	27,993	CY	10	280
	METALS				
	SHEET PILING FOR CELLS (PS31)	177,876	SF	25.00	4,447
	SHEET PILE CUTOFF WALL (PZ35)	71,963	SF	30.00	2,159
	FOUNDATION PILING	1	JOB	SUM	318
	POST TENSIONING	1,280	LF	30	38
	STRUCTURAL STEEL	1	JOB	SUM	4,060
	05.60 GUIDEWALLS SUBTOTAL				24,353
09.	**CHANNEL WORK**	1	JOB	SUM	3,835
	PROJECT SUBTOTAL				99,951
	CONTINGENCIES 25%				24,988
	PROJECT SUBTOTAL WITH CONTINGENCIES				125,000
30.	**PLANNING, ENGINEERING, AND DESIGN (10%)**				13,000
31.	**CONSTRUCTION MANAGEMENT (10%)**				13,000
	PROJECT TOTAL				$ 151,000

		QUANTITY CALCULATIONS									
	L/D 11, Location 2, Type C, Pile Founded							Sheet 1_ of	3_		
1	Remove existing sill down to										
	elev. 577.83	25	x	2	x	110	=	5,500.00	CF	203.70	CY
2	Remove existing 2' thick slab	95.25	x	2	x	110	=	20,955.00	CF	776.11	CY
3	Demolish existing guidewall, to	502	x	30	x	53	=	798,180.00	CF	29,562.22	CY
	include timber crib and pile										
4	Install sheet piling, PZ27	35	x	673	x	2	=	47,110.00	SF		
5	Excavation	3.8	x	110	x	604	=	252,472.00	CF	9,350.81	CY
6	Place scour stone	1.5	x	172	x	675	=	174,150.00	CF	6,450.00	CY
7	Install piling, HP 14 x 89										
	(24 ea per monolith @50' long										
	for 28 monoliths)	24	x	50	x	28	=	33,600.00	LF		
8	Steel footing box(1/2"steel plate)										
	riverward wall										
	20.42 lb x [(6'x3'x2)+(4'x3'x2)]=1,225 LB @ 30 locations							36,750.00	LB		
	landward wall										
	20.42 lb x [(6'x3'x2)+(4'x3'x2)]=1,225 LB @ 30 locations							36,750.00	LB		
9	Install piling, HP 14 x 89										
	for chamber floor paving blocks										
	(7 ea per joint @ 50' for 14 ea										
	joints)	50.5	x	7	x	14	=	4,949.00	LF		
10	Scour stone, (removed prior to										
	floor construction)	3	x	110	x	580	=	191,400.00	CF	7,088.89	CY
11	Filter layer	2	x	110	x	580	=	127,600.00	CF	4,725.93	CY
12	Filter gravel	2	x	110	x	580	=	127,600.00	CF	4,725.93	CY
13	Paving blocks (3'x30'x14')										
	1,260cf @ 8/row x 18 rows	1,260	x	8	x	18	=	181,440.00	CF	6,720.00	CY
14	Structural steel (per cell unit)										
	- W18 x 86 waler	86	x	154	=	13,244.00					
	- W18 x 86 brace	86	x	22	=	1,892.00					
	- C12 x 25 diagonal brace	25	x	232	=	5,800.00					
	(There are 30 cell units, 15 in each wall)					20,936.00	x	30	=	628,080.00	LB
									or	314.04	TN
15	Precast liner										
	riverward wall	25.8	x	603	x	1	=	15,557.40	CF		
	landward wall	25.8	x	603	x	1	=	15,557.40	CF		
								31,114.80	CF	1,152.40	CY
16	Precast concrete miter gate sill										
	and wall monoliths										
	Taken from quantity calc's from St. Paul District's Microstation analysis										
						- Slab volume			=	1,434.50	CY
						- Wall volume			=	771.32	CY
						- Concrete strut volume			=	17.25	CY
	Total Precast Concrete Volume for Miter Gate Sill & Wall Monoliths								=	2,223.07	CY

LOCK AND DAM NO. 11, LOCATION 3, TYPE B
1200' LOCK ALTERNATIVE (ROCK FOUNDED)

ACCOUNT CODE	ITEM	QUANTITY	UNIT	UNIT PRICE ($'s)	AMOUNT ($1,000's)
01.	**LANDS AND DAMAGES**				
	REAL ESTATE	1	JOB	SUM	230
04.	**DAMS**				
	REMOVAL OF EXISTING STRUCTURES	1	JOB	SUM	150
	04 DAMS SUBTOTAL				150
05.	**LOCKS**				
	SITEWORK				
	MOBILIZATION	1	JOB	SUM	10,650
	DEMOLITION	1	JOB	SUM	1,910
	EXCAVATION	48,960	CY	6.25	306
	FOUNDATION FILL AT SCOUR HOLE	2,800	CY	18.75	53
	WALL FILL	15,760	CY	10.00	158
	CAPSTONE	52,660	TN	25.00	1,317
	RIPRAP	33,380	TN	20.00	668
	LEVELING STONE IN LOCK FLOOR	4,580	TN	15.00	69
	GRAVEL FILTER IN LOCK FLOOR	16,606	TN	15.00	249
	GEOTEXTILE	13,740	SY	6.00	82
	FOUNDATION/LOCK DEWATERING	1	JOB	SUM	3,000
	MARINE FACILITIES, TEMP. MOORING STR.	1	JOB	SUM	3,900
	CONCRETE				
	STRUCTURAL GROUTING	450	CY	200	90
	CAST IN PLACE REINFORCED CONCRETE	65,100	CY	217	14,127
	CAST IN PLACE CONNECTIONS	964	CY	725	699
	PRECAST CONCRETE	10,000	CY	400	4,000
	TREMIE CONCRETE, BASE .	10,340	CY	165	1,706
	PRECAST FLOOR PAVERS AND STRUTS	15,450	CY	286	4,419
	SET PRECAST FLOOR BEAMS	31	EA	16000	496
	SET FLOOR PANELS	62	EA	10000	620
	STEEL REINFORCEMENT	7,614,000	LB	0.75	5,711
	METALS				
	SHEET PILING	33,300	SF	35.80	1,192
	SHEET PILE BRACING	1	JOB	SUM	350
	FOUNDATION PILING AND TESTING	209,190	LF	39.75	8,315
	STRUCTURAL STEEL (GATES, VALVES, ETC.)	1	JOB	SUM	11,613
	STRUCTURAL STEEL (MISCELLANEOUS - LADDERS, ETC.)	1	JOB	SUM	3,040
	ELECTRICAL				
	ELECTRICAL SYSTEM		JOB	SUM	4,700
	INSTRUMENTATION	1	JOB	SUM	1,250
	MECHANICAL				
	GATE AND VALVE OPERATING MACHINERY	1	JOB	SUM	2,750
	MECHANICAL SYSTEMS	1	JOB	SUM	3,200
	MISCELLANEOUS	1	JOB	SUM	1,950
	05 LOCKS SUBTOTAL				92,588

LOCK AND DAM NO. 11, LOCATION 3, TYPE B
1200' LOCK ALTERNATIVE (ROCK FOUNDED)

05.60.	GUIDEWALLS				
	SITEWORK				
	EXCAVATION	118,490	CY	4.5	533
	BACKFILL	73,640	CY	10	736
	SCOUR PROTECTION	46,350	TON	15	695
	CONCRETE				
	42" DIAMETER PILES	6,360	LF	400	2,544
	CAST IN PLACE REINFORCED CONCRETE	6,539	CY	150	981
	PRECAST BEAMS	17,325	CY	500	8,663
	PRECAST BEAM SEATS	262	CY	1000	262
	TREMIE CONCRETE	1,709	CY	500	855
	PERMANENT CELL FILL (C0NCRETE)	6,023	CY	200	1,205
	GROUT FOR BEAMS	778	CY	1000	778
	STEEL REINFORCEMENT	2,921,700	LB	0.75	2,191
	GRAVEL FILL	20,912	CY	10	209
	METALS				
	SHEET PILING	110,185	SF	25.00	2,755
	FOUNDATION PILING	1	JOB	SUM	318
	POST TENSIONING	2,030	LF	30	61
	STRUCTURAL STEEL	1	JOB	SUM	4,060
	05.60 GUIDEWALLS SUBTOTAL				26,845
09.	CHANNEL WORK	1	JOB	SUM	3,835
	PROJECT SUBTOTAL				123,648
	CONTINGENCIES 25%				30,912
	PROJECT SUBTOTAL WITH CONTINGENCIES				154,560
30.	PLANNING, ENGINEERING, AND DESIGN (10%)				15,000
31.	CONSTRUCTION MANAGEMENT (10%)				15,000
	PROJECT TOTAL				$ 185,000

Subject	ROCK FOUNDED LOCKS: L/D 11 Location 3 Quantities for Type B Lock, Crane-In Construction	Date SEP 96
Computed by Michael Cummings	Checked	Sheet 1 of 6

Crane - In Gate Monolith

Note: For quantities change the Red values in the cells of the dimensioned cross section shown.

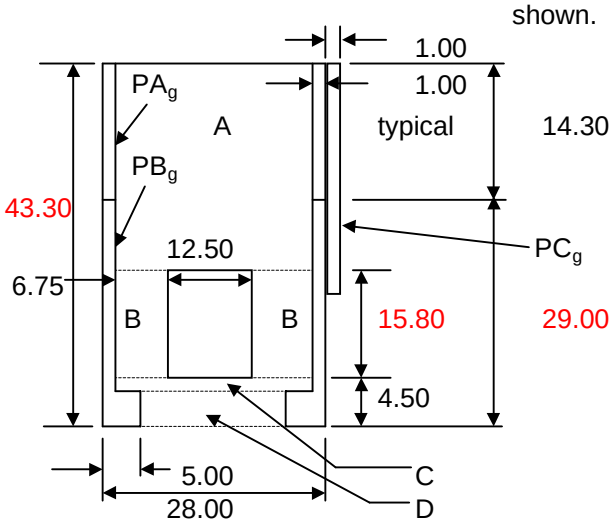

Cast in place concrete

A_g =	598.0	SF	
B_g =	213.3	SF	
C_g =	26.0	SF	
D_g =	63.0	SF	CULVERT
Total =	900.3	SF	

Pre-cast concrete

PA_g =	28.6	SF
PB_g =	86.0	SF
PC_g =	18.5	SF
Total =	133.1	SF

hght chk = 43.30 left
hght chk = 43.30 right

US lngth = .0 ft DS lngth = 250.0 ft

Crane - in Lock Wall

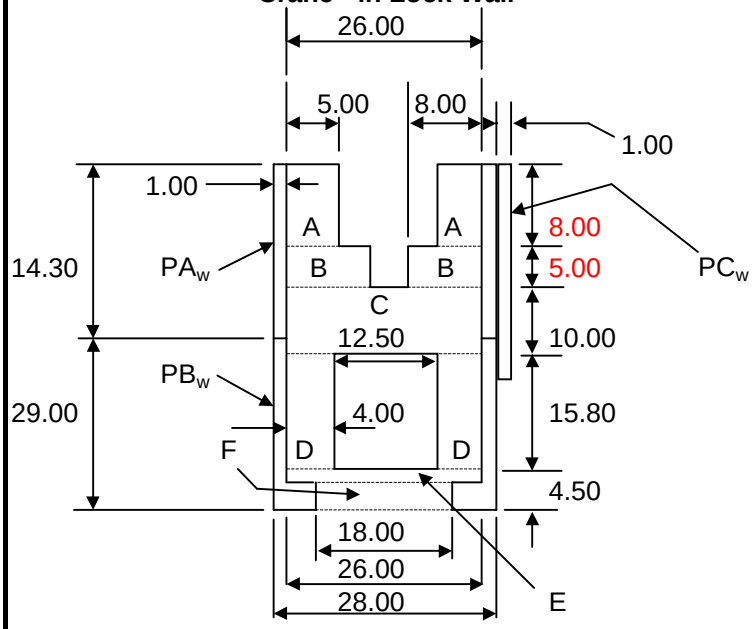

Cast in place concrete

A_w =	80.00	SF	
B_w =	80.00	SF	
C_w =	260.00	SF	
D_w =	213.30	SF	
E_w =	26.00	SF	CULVERT
F_w =	63.00	SF	
Total =	722.30	SF	

Pre-cast concrete

PA_w =	28.6	SF
PB_w =	86.0	SF
PC_w =	18.5	SF
Total =	133.1	SF

hght chk = 43.30 left
hght chk = 43.30 right

RS Wall = 998.0 ft LS Wall = 515.0 ft

Ld113bp

Subject		Date
L/D 11 Location 3 Quantities for Type B Lock, Crane-In Construction		SEP 96
Computed by Michael Cummings	Checked	Sheet 2 of 6

Typical cell for cofferdam

Area = 1,963.0 ft^2

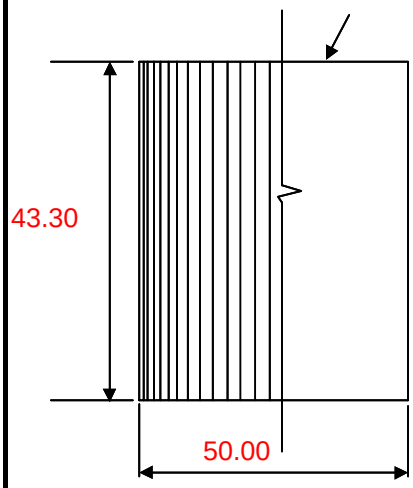

Pile type: ps31
Choose PSA23, PS27.5, or PS31

Area between cells:

Area =	855.0	ft^2
Distance =	15.91	ft
Length =	1.64	ft
Number in cell =	96	piles
No. in space =	21	piles
US Length =	110.0	ft
DS Length =	110.0	ft

LOCK CHAMBER WALLS:

A. WALL MONOLITHS

1. River side walls

(a) Cast in place concrete

Volume = 26,698.3 CY

(b) Precast concrete

Volume = 4,919.8 CY

1. Land side walls

(a) Cast in place concrete

Volume = 13,777.2 CY

(b) Precast concrete

Volume = 2,538.8 CY

B. GATE MONOLITHS

1. Upstream cast in place concrete

Volume = .0 CY

2. Upstream precast concrete

Volume = .0 CY

1. Downstream cast in place concrete

Volume = 16,672.2 CY

2. Downstream precast concrete

Volume = 2,464.8 CY

Subject		Date
L/D 11 Location 3 Quantities for Type B Lock, Crane-In Construcion		SEP 96
Computed by Michael Cummings	Checked	Sheet 3 of 6

COFFERDAMS:

1. Cofferdam #1, Upstream

Number = 2.0 cells

Total = 468.0 piles

2. Cofferdam #2, Downstream

Number = 2.0 cells

Total = 18,077.0 CY fill volume

SILLS:

Length = 120.0 ft
Width = 111.0 ft
Height = 8.0 ft

Volume = 7,893.3 CY

SUMMARY:

CONCRETE (Cast in place)

A.	Lockwalls =	40,475.6 CY
B.	Gate monoliths =	16,672.2 CY
C.	Sills =	7,893.3 CY
	Total =	65,100.0 CY

PRECAST CONCRETE

A.	Lockwalls =	7,458.5 CY
B.	Gate monoliths =	2,464.8 CY
	Total =	10,000.0 CY

SHEETPILES

A.	Required number for cofferdams =	468.0 piles
	Total =	500.0 CY
	Total =	33,300.0 SF of piling

FILL

A.	Required fill for cofferdams =	18,077.0 CY
	Total =	18,100.0 CY

Subject		Date
L/D 11 Location 3 Quantities for Type B Lock, Crane-In Construcion		SEP 96
Computed by Michael Cummings	Checked	Sheet 4 of 6

Upstream Guidewall Cell, Small

(typical)

Area = 700.0 SF

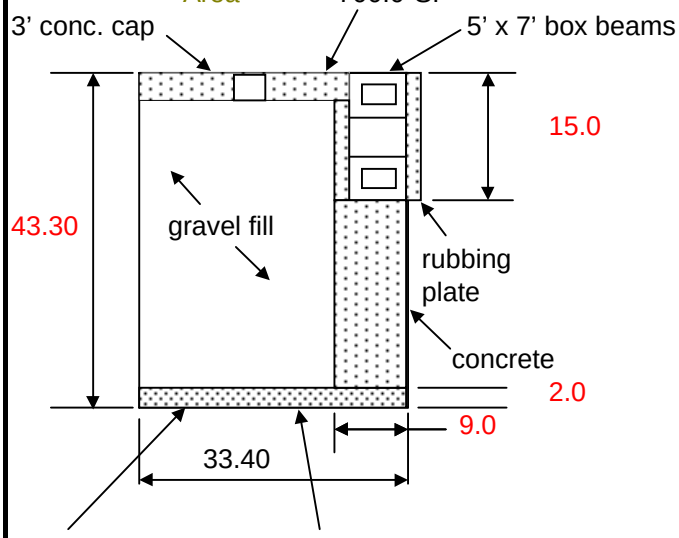

Area = 876.0 SF

Note: For quantities change the RED values in the cells of the dimensioned cross section shown.

Cast-in-Place Concrete

3' conc. cap	=	77	CY
concrete	=	211	CY
Total	=	288	CY
for 7 cells	=	2,015	CY
Tremie concrete	=	65	CY
for 7 cells	=	455	CY
Precast Concrete			
5'x7' beam	=	889	CY
rubbing pl.	=	500	CY
Total	=	1,389	CY
Gravel fill	=	996	CY
for 7 cells	=	6,971	CY
Sheet Piling	=	4,543	SF
for 7 cells	=	31,804	SF

Upstream Guidewall Cell, Large

(typical)

Area = 2,124.0 SF

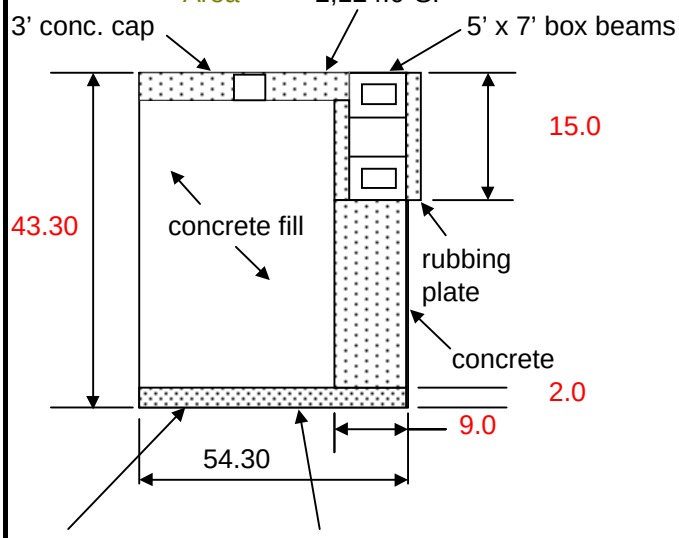

Area = 2,316.0 SF

Note: For quantities change the RED values in the cells of the dimensioned cross section shown.

Cast-in-Place Concrete

3' conc. cap	=	235	CY
concrete	=	270	CY
Total	=	505	CY
Tremie concrete	=	172	CY
Permanent Cell Fill		3,012	CY
Sheet Piling	=	7,386	SF

Subject		Date
L/D 11 Location 3 Quantities for Type B Lock, Crane-In Construcion		SEP 96
Computed by Michael Cummings	Checked	Sheet 5 of 6

Downstream Guidewall Cell, Small

(typical)

Area = 700.0 SF

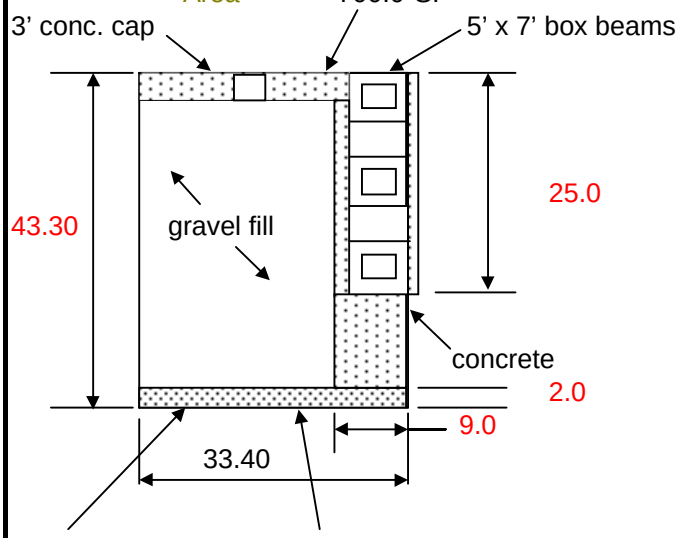

Area = 876.0 SF

Note: For quantities change the RED values in the cells of the dimensioned cross section shown.

Cast-in-Place Concrete

3' conc. cap	=	77	CY
concrete	=	163	CY
Total	=	239	CY
for 14 cells	=	3,353	CY
Tremie concrete	=	65	CY
for 14 cells	=	910	CY

Precast Concrete

5'x7' beam	=	2,667	CY
rubbing pl.	=	1,667	CY
Total	=	4,333	CY
Gravel fill	=	996	CY
for 14 cells	=	13,941	CY
Sheet Piling	=	4,543	SF
for 14 cells	=	63,608	SF

Downstream Guidewall Cell, Large

(typical)

Area = 2,124.0 SF

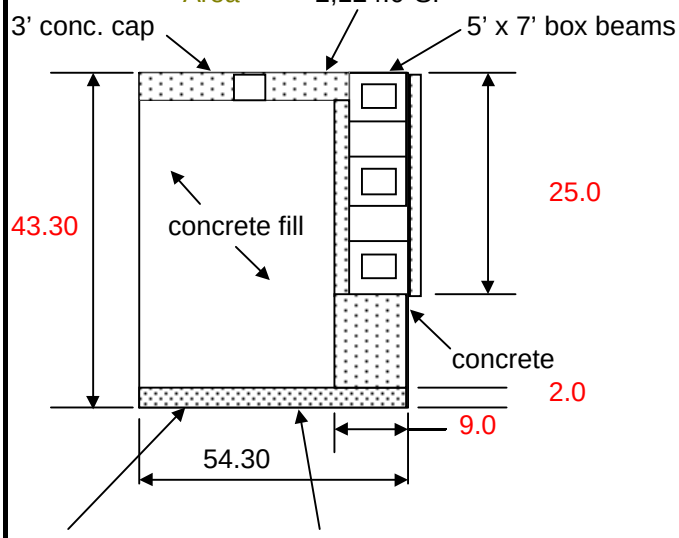

Area = 2,316.0 SF

Note: For quantities change the RED values in the cells of the dimensioned cross section shown.

Cast-in-Place Concrete

3' conc. cap	=	235	CY
concrete	=	431	CY
Total	=	666	CY
Tremie concrete	=	172	CY
Permanent Cell Fill		3,012	CY
Sheet Piling	=	7,386	SF

Subject		Date
L/D11 Location 3 Quantities for Type B Lock, Crane-In Construcion		SEP 96
Computed by Michael Cummings	Checked	Sheet 6 of 6

LOCK GUIDEWALLS :

A. UPSTREAM GUIDEWALL

1. Cast-in-place concrete

Volume = 2,520 CY

2. Precast concrete

Volume = 1,389 CY

3. Gravel Fill

Volume = 6,971 CY

4. Sheet Piling

Area = 39,191 SF

5. Permanent Cell Fill

Volume = 3,012 CY

6. Tremie Concrete

Volume = 627 CY

B. DOWNSTREAM GUIDEWALL

1. Cast-in-place concrete

Volume = 4,019 CY

2. Precast concrete

Volume = 4,333 CY

3. Gravel Fill

Volume = 13,941 CY

4. Sheet Piling

Area = 70,995 SF

5. Permanent Cell Fill

Volume = 3,012 CY

6. Tremie Concrete

Volume = 1,082 CY

Guidewall Summary

Total Cast-in-Place Concrete	6,539	CY
Total Precast Concrete	5,722	CY
Total Gravel Fill	20,912	CY
Total Sheet Piling	110,185	SF
Total Permanent Cell Fill	6,023	CY
Total Tremie Concrete	1,709	CY

LOCK AND DAM NO. 11, LOCATION 3, TYPE C
1200' LOCK ALTERNATIVE (PILE FOUNDED)

CCOUNT CODE	L/D 11	QUANTITY	UNIT	NIT PRICE ($'s)	AMOUNT ($1,000's)
01.	**LANDS AND DAMAGES**				
	REAL ESTATE	1	JOB	SUM	230
04.	**DAMS**				
	REMOVAL OF EXISTING STRUCTURES	1	JOB	SUM	2,150
	04 DAMS SUBTOTAL				2,150
05.	**LOCKS**				
	SITEWORK				
	MOBILIZATION	1	JOB	SUM	10,650
	DEMOLITION	1	JOB	SUM	1,910
	EXCAVATION	124,400	CY	6.25	778
	FOUNDATION FILL AT SCOUR HOLE	2,800	CY	18.75	53
	WALL FILL	15,760	CY	10.00	158
	CAPSTONE	52,660	TN	25.00	1,317
	RIPRAP	33,380	TN	20.00	668
	LEVELING STONE IN LOCK FLOOR	4,580	TN	15.00	69
	GRAVEL FILTER IN LOCK FLOOR	16,606	TN	15.00	249
	GEOTEXTILE	13,740	SY	6.00	82
	FOUNDATION/LOCK DEWATERING	1	JOB	SUM	3,000
	MARINE FACILITIES, TEMP. MOORING STR.	1	JOB	SUM	3,900
	CONCRETE				
	STRUCTURAL GROUTING	450	CY	200	90
	CAST IN PLACE REINFORCED CONCRETE	59,100	CY	217	12,825
	CAST IN PLACE CONNECTIONS	964	CY	725	699
	PRECAST CONCRETE	2,932	CY	400	1,173
	TREMIE CONCRETE	9,135	CY	165	1,507
	PRECAST FLOOR PAVERS AND STRUTS	15,450	CY	286	4,419
	SET PRECAST FLOOR BEAMS	31	EA	16000	496
	SET FLOOR PANELS	62	EA	10000	620
	STEEL REINFORCEMENT	6,619,000	LB	0.75	4,964
	METALS				
	SHEET PILING	260,100	SF	35.80	9,312
	SHEET PILE BRACING	1	JOB	SUM	350
	FOUNDATION PILING AND TESTING	222,300	LF	39.75	8,836
	STRUCTURAL STEEL (GATES, VALVES, TRASH	1	JOB	SUM	11,613
	STRUCTURAL STEEL (MISCELLANEOUS - LAD	1	JOB	SUM	3,040
	ELECTRICAL				
	ELECTRICAL SYSTEM	1	JOB	SUM	4,700
	INSTRUMENTATION	1	JOB	SUM	1,250
	MECHANICAL				
	GATE AND VALVE OPERATING MACHINERY	1	JOB	SUM	2,750
	MECHANICAL SYSTEMS	1	JOB	SUM	3,200
	MISCELLANEOUS	1	JOB	SUM	1,950
	05 LOCKS SUBTOTAL				96,626

LOCK AND DAM NO. 11, LOCATION 3, TYPE C
1200' LOCK ALTERNATIVE (PILE FOUNDED)

05.60.	**GUIDEWALLS**				
	SITEWORK				
	~~EXCAVATION~~ *(Included in Channel Work)*	0	CY	4.5	0
	~~BACKFILL~~ *None*	0	CY	10	0
	SCOUR PROTECTION	37,312	TON	15	560
	CONCRETE				
	42" DIAMETER PILES	5,120	LF	400	2,048
	CAST IN PLACE REINFORCED CONCRETE	977	CY	150	147
	PRECAST BEAMS	13,947	CY	500	6,973
	PRECAST BEAM SEATS	211	CY	1000	211
	TREMIE CONCRETE	168	CY	500	84
	PERMANENT CELL FILL (C0NCRETE)	7,901	CY	200	1,580
	GROUT FOR BEAMS	626	CY	1000	626
	STEEL REINFORCEMENT	2,351,969	LB	0.75	1,764
	GRAVEL FILL	38,733	CY	10	387
	METALS				
	SHEET PILING	1	JOB	SUM	6,131
	FOUNDATION PILING	1	JOB	SUM	256
	POST TENSIONING	1,634	LF	30	49
	STRUCTURAL STEEL	1	JOB	SUM	3,268
	FLOATING GUIDEWALL	1	JOB	SUM	3,750
	05.60 GUIDEWALLS SUBTOTAL				27,835
09.	**CHANNEL WORK**	1	JOB	SUM	3,840
	PROJECT SUBTOTAL				130,680
	CONTINGENCIES 25%				32,670
	PROJECT SUBTOTAL WITH CONTINGENCIES				163,350
30.	**PLANNING, ENGINEERING, AND DESIGN (10%)**				16,500
31.	**CONSTRUCTION MANAGEMENT (10%)**				16,500
	PROJECT TOTAL				$ 196,350

TOTAL BASIC LOCK COST (O4., 05., 05.60.) WITH CONTINGENCIES, PED, & CM*	**$ 196,000**

*(EXCLUDES REAL ESTATE, RELOCATION, AND CHANNEL WORK WHICH ARE MORE SITE-SPECIFIC.)

Subject	ROCK FOUNDED LOCKS: L/D 11 Location 3 Quantities for Type C Lock, Parallel Sheetpile Walls	Date June 1997
Computed by David R. Wehrley	Checked DRW	Sheet 1 of 4

Riverward Lockwall

(Including the miter gate monolith)

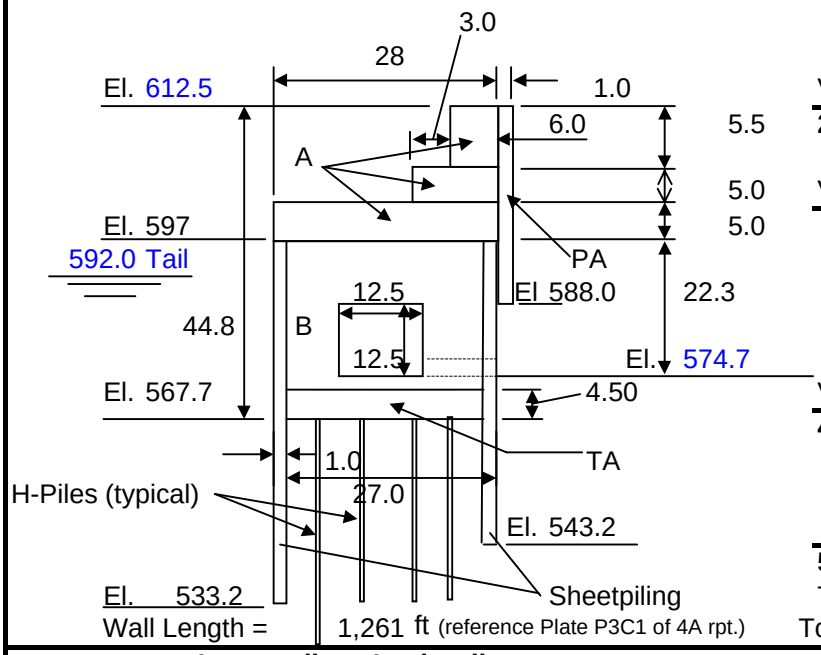

Wall Length = 1,261 ft (reference Plate P3C1 of 4A rpt.)

1. Cast in place concrete

A =	218.0	SF
B =	498.8	SF
Sum =	716.8	SF
Volume =	**33,480**	CY

2. Tremie concrete

TA =	121.5	SF
Volume =	**5,675**	CY

3. Precast concrete

PA =	24.5	SF
PB =	14.5	SF (Culvert top, not shown)
Sum =	39.0	SF
Volume =	**1,821**	CY

4. Sheetpiling

Ht. Left=	63.8	FT
Ht. Right=	53.8	FT
Area =	**148,294**	SF (both sides)

5. H-Piling = 54/45' mono x wall length

Total No.=	1,513	HP 14 X89
Total Lgth.=	**113,490**	LF HP

Intermediate Lockwall

(Including the miter gate monolith)

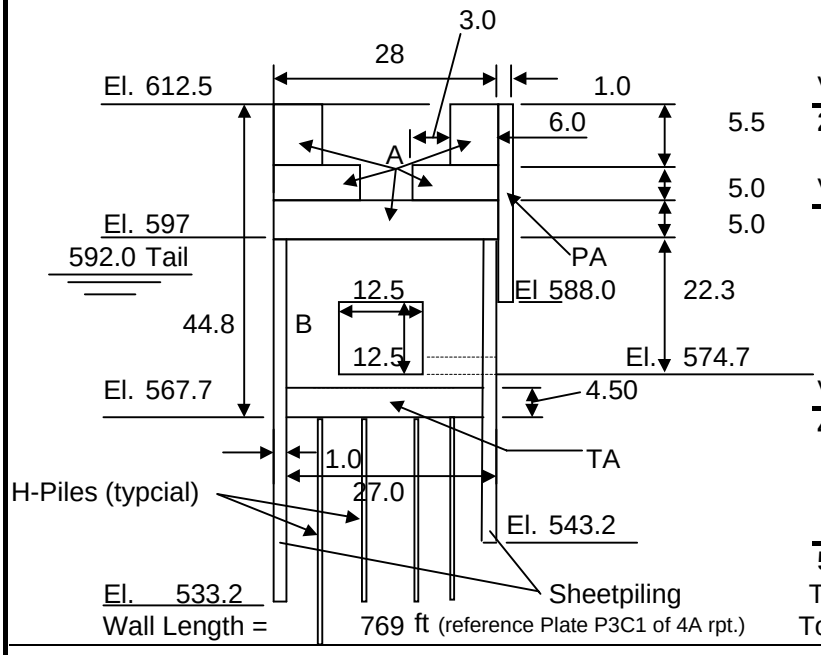

Wall Length = 769 ft (reference Plate P3C1 of 4A rpt.)

1. Cast in place concrete

A =	296.0	SF
B =	498.8	SF
Sum =	794.8	SF
Volume =	**22,639**	CY

2. Tremie concrete

TA =	121.5	SF
Volume =	**3,461**	CY

3. Precast concrete

PA =	24.5	SF
PB =	14.5	SF (Culvert top, not shown)
Sum =	39.0	SF
Volume =	**1,111**	CY

4. Sheetpiling

Ht. Left=	63.8	FT
Ht. Right=	53.8	FT
Area =	**90,434**	SF (both sides)

5. H-Piling = 54/45' mono x wall length

Total No.=	923	HP 14 X89
Total Lgth.=	**69,210**	FT HP

Subject		Date
L/D 11 Location 3 Quantities for Type C Lock, Parallel Sheetpile Walls		June 1997
Computed by David R. Wehrley	Checked DRW	Sheet 2 of 4

COFFERDAM (ONLY SINGLE WALL COFFERDAM -- FOR LOWER MITER GATE MONOLITH):

ASSUME THE SAME AS L/D 25

Extra Sheetpiling = 2 x (29+110+29) x length
= 21,437 LF Sheetpiling

LOWER MITER GATE SILL:

Length = 120.0 ft
Width = 110.0 ft
Average Height = 6.0 ft

Volume = 2,933.3 CY (cast-in-place concrete)

H-piling for sill: Assume 5' spacing each way, 75' long
Total = (120/5 x 110/5) x 75
= 39,600 LF (HP 14X89)

SUMMARY:

CONCRETE (Cast in place)

Lockwalls =	56,118	CY
Sills =	2,933	CY
Total =	59,100	CY

PRECAST CONCRETE

Total =	2,932	CY

TREMIE CONCRETE

Total =	9,135	CY

SHEETPILING

Required quantity for walls =	238,700	SF
Required quantity for cofferdam =	21,400	SF
Total =	260,100	SF of piling

FOUNDATION PILING

Total =	222,300	LF (HP 14 X 89)

Subject		Date
L/D 11 Location 3 Quantities for Type C Lock, Guardwalls		June 1997
Computed by David R. Wehrley	Checked David R. Wehrley	Sheet 3 of 4

Upstream Guardwall Cell, Small (14 total)
(Downstream Quantities the same)

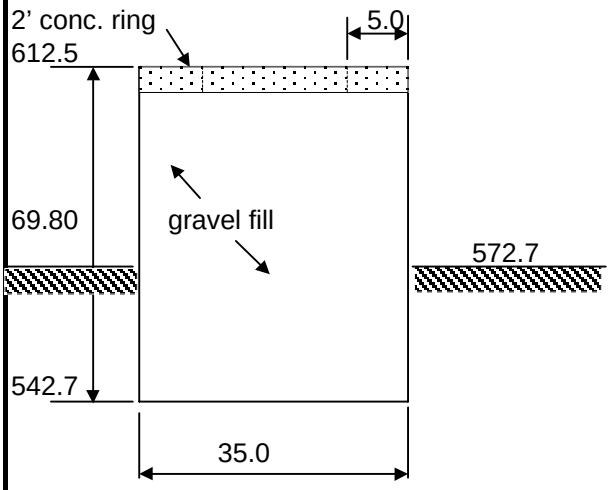

Except for those quantities computed here, all other quantities are assumed the same as for Lock 25 (the model site for pile-founded locks).

Cast-in-Place Concrete

2' conc. ring	=	34.9	CY
for 14 cells	=	489	CY
Gravel fill	=	1,383	CY
for 14 cells	=	19,366	CY
Sheet Piling	=	7,675	SF
for 14 cells	=	107,449	SF

Upstream Guardwall Cell, Large, Concrete filled (1 total)
(Downstream Quantities the same)

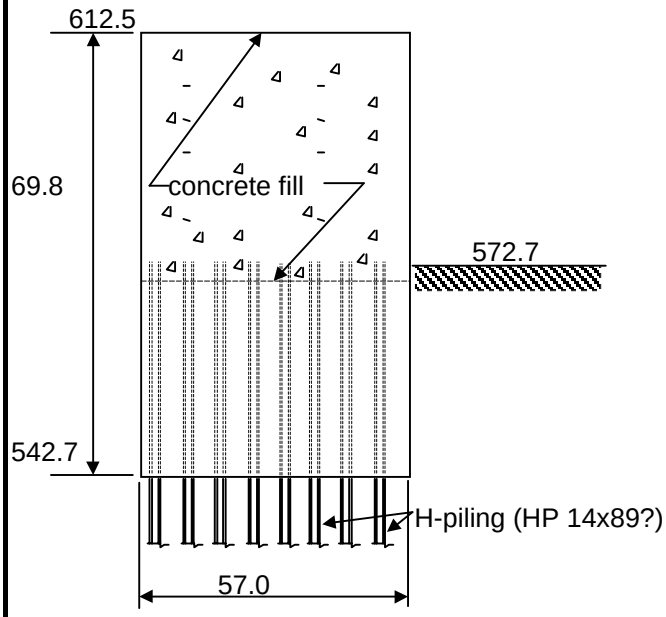

Concrete Fill for Cell
= 3,951 CY

Sheet Piling = 12,499 SF

H-piling:
No. of Piles = 102
Length of Piles = 7,650 L.F.

Subject		Date
L/D 11 Location 3 Quantities for Type C Lock, Guardwalls		June 1997
Computed by David R. Wehrley	Checked David R. Wehrley	Sheet 4 of 4

LOCK GUIDEWALLS :

A. UPSTREAM GUIDEWALL

1. Concrete Rings (cast-in-place)

Volume = 489 CY

2. Concrete cell fill

Volume = 3,951 CY

3. Gravel Fill

Volume = 19,366 CY

4. Sheet Piling

Area = 119,948 SF

5. H-Piling

Length = 7,650 LF

B. DOWNSTREAM GUIDEWALL

1. Concrete Rings (cast-in-place)

Volume = 489 CY

2. Concrete cell fill

Volume = 3,951 CY

3. Gravel Fill

Volume = 19,366 CY

4. Sheet Piling

Area = 119,948 SF

5. H-Piling

Length = 7,650 LF

Guidewall Summary

Total Cast-in-Place Concrete	977	CY
Total Concrete Fill	7,901	CY
Total Gravel Fill	38,733	CY
Total Sheet Piling	239,896	SF
Total H-Piling	15,300	LF

ACCOUNT CODE	ITEM	QUANTITY	UNIT	UNIT PRICE ($'s)	AMOUNT ($1,000's)	
01.	LANDS AND DAMAGES					
	REAL ESTATE	1	JOB	SUM	306	
02.	RELOCATION	1	JOB	SUM	0	
04.	DAMS				0	
05.	LOCKS					
	SITEWORK					
	MOBILIZATION	1	JOB	SUM	8,000	
	DEMOLITION	1	JOB	SUM	500	
	EXCAVATION/ DREDGING	400,000	CY	5.50	2,200	
	BACKFILL	151,300	CY	6.25	946	
	ROCK EXCAVATION	0	CY	45.00	0	
	SCOUR PROTECTION	27,100	TN	15.00	407	
	FOUNDATION DEWATERING	1	JOB	SUM	200	
	CONCRETE					
	CAST IN PLACE REINFORCED CONCRETE	63,800	CY	280.00	17,864	
	PRECAST CONCRETE WALL PANELS	2,013	CY	400.00	805	
	PRECAST CONCRETE CULVERT	5,480	CY	700.00	3,836	
	METALS					
	TIES, ANCHOR	1,100	EA	2,500.00	2,750	
	SHEETPILING - TEMPORARY (FOR DEWATERING)	50,000	SF	25.00	1,250	
	SHEETPILING - PERMANENT (PS 31)	163,100	SF	30.00	4,893	
	SHEETPILING - PERMANENT (PZ 27)	43,500	SF	30.00	1,305	
	STRUCTURAL STEEL (GATES, VALVES, TRASHRACKS, OTHER)	1	JOB	SUM	3,200	
	STRUCTURAL STEEL (MISCELLANEOUS - LADDERS, ETC.)	1	JOB	SUM	3,000	
	HP 14X117 PILING	93,200	LF	50.00	4,660	
	ELECTRICAL					
	ELECTRICAL SYSTEM	1	JOB	SUM	4,700	
	INSTRUMENTATION	1	JOB	SUM	1,000	
	MECHANICAL					
	GATE AND VALVE OPERATING MACHINERY	1	JOB	SUM	2,053	
	MECHANICAL SYSTEMS	1	JOB	SUM	3,100	
	MISCELLANEOUS	1	JOB	SUM	6,667	
	05 LOCKS SUBTOTAL				73,335	
05.60.	GUIDEWALLS					
	CONCRETE					
	CAST IN PLACE REINFORCED CONCRETE	2,300	CY	280.00	644	
	PRECAST CONCRETE (PRESTRESSED)	6,000	LF	1,170.00	7,020	
	PRECAST CONCRETE (W/REINFORCEMENT)	3,000	CY	400.00	1,200	
	TREMIE CONCRETE (WITH REINFORCEMENT)	15,200	CY	210.00	3,192	
	GRAVEL FILL	29,600	CY	15.00	444	
	METALS					
	SHEETPILING FOR CELLS (PS31)	185,400	SF	25.00	4,635	
	SHEETPILE RETAINING WALL (PZ35) - DOWNSTREAM	32,800	SF	30.00	984	
	STRUCTURAL STEEL	1	JOB	SUM	3,811	
	05.60 GUIDEWALLS SUBTOTAL				21,930	
09.	CHANNEL WORK	1	JOB	SUM	11,300	
	PROJECT SUBTOTAL				106,871	
	CONTINGENCIES (25%)				27,129	26,718
	PROJECT SUBTOTAL WITH CONTINGENCIES				134,000	
30.	PLANNING, ENGINEERING, AND DESIGN (10%)				13,000	
31.	CONSTRUCTION MANAGEMENT (10%)				13,000	
	PROJECT TOTAL				160,000	

TOTAL BASIC LOCK COST (O4., 05., 05.60.) WITH CONTINGENCIES, PED, & CM* **$ 143,000**

*(EXCLUDES REAL ESTATE, RELOCATION, AND CHANNEL WORK WHICH ARE MORE SITE-SPECIFIC.)

Subject	PILE FOUNDED LOCKS 1200 ft locks Location 1 Quantities for Type C Lock, LaGrange L/D	Date 11-Feb-97
Computed by Hans Drehsler	Checked David R. Wehrley	Sheet 1 of 6

DS Gate Monolith

Landside **Riverside**

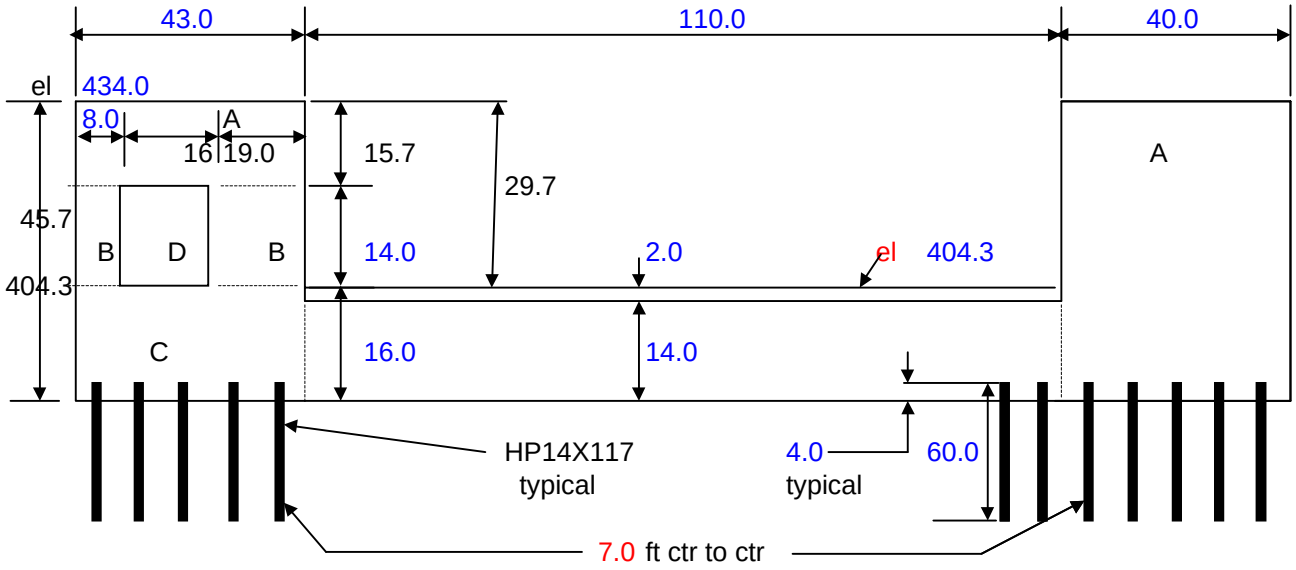

DS length = 165.0 ft

Gate monolith with culvert

DS Cast in place concrete

A =	675	SF	
B =	378	SF	
C =	688	SF	
D =	224	SF	CULVERT
Total =	1,741	SF	

Gate monolith without culvert

DS Cast in place concrete

A =	1,828	SF
Total =	1,828	SF

Linear Feet of H-Piling

Total = 38,994 LF

Subject	PILE FOUNDED LOCKS 1200 ft locks Location 1 Quantities for Type C Lock, LaGrange L/D	Date 11-Feb-97
Computed by Hans Drehsler	Checked David R. Wehrley	Sheet of 2 6

US Gate Monolith

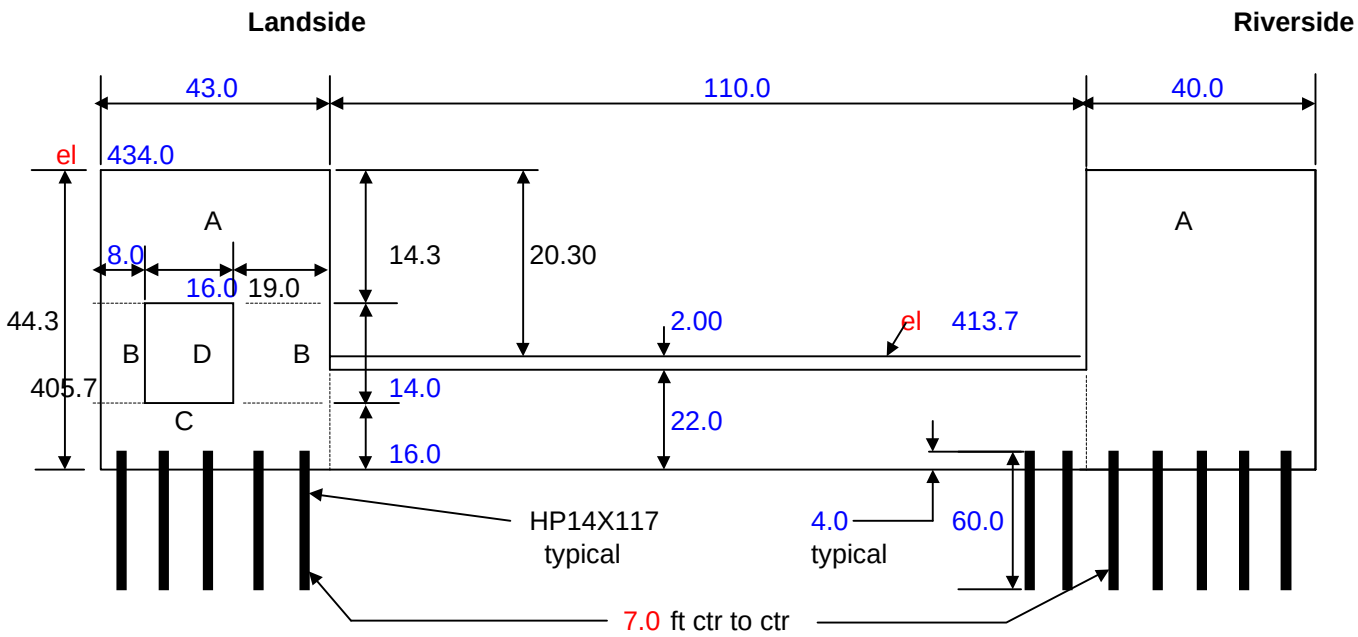

US length = 137.0 ft

Gate monolith with culvert

US Cast in place concrete

A =	615	SF	
B =	378	SF	
C =	688	SF	
D =	224	SF	CULVERT
Total =	1,681	SF	

Gate monolith without culvert

US Cast in place concrete

A =	1,772	SF
Total =	1,772	SF

Linear Feet of H-Piling

Total = 32,377 LF

Subject	PILE FOUNDED LOCKS 1200 ft locks Location 1 Quantities for Type C Lock, LaGrange L/D	Date 11-Feb-97
Computed by Hans Drehsler	Checked David R. Wehrley	Sheet 3 of 6

Box fill / empty culvert, one only

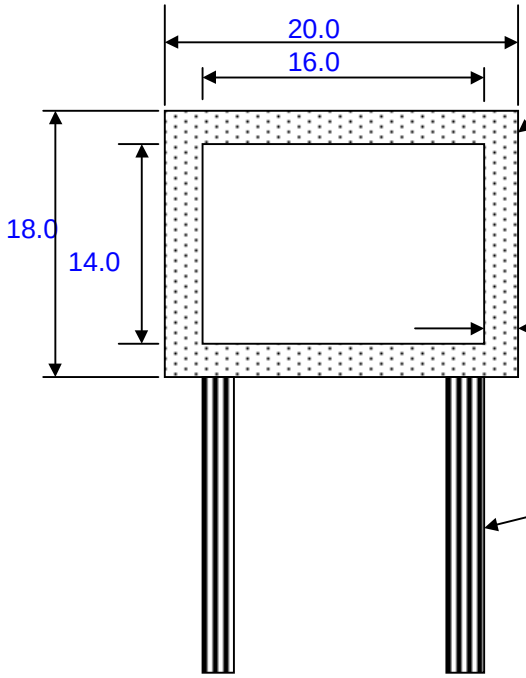

Pre cast concrete culvert

A = 136.0 SF

Total = 136.0 SF

Length of culvert = 1,088 ft, landside only

Total = 435 piles

2.0
typical

Total = 21,760 LF

HP 14X117
50.0 ft long
5.0 ft ctr to ctr along horizontal axis

Sheet piling for lock walls
PZ40 piling, typical

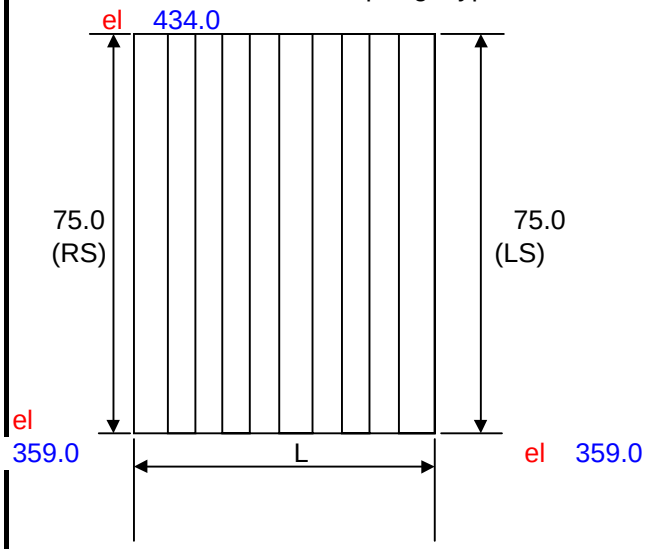

Pile type: PS31
Choose, PSA23, PS27.5, or PS31

Length = 1.64 ft

LS number of sheet piles = 663 piles

RS number of sheet piles = 663 piles

LS sheet piling = 81,525 SF

RS sheet piling = 81,525 SF

L = **LS** lngth = 1,087.0 ft

L = **RS** lngth = 1,087.0 ft

Subject	PILE FOUNDED LOCKS 1200 ft locks Location 1 Quantities for Type C Lock, LaGrange L/D	Date 11-Feb-97
Computed by Hans Drehsler	Checked David R. Wehrley	Sheet of 4 6

Tiebacks, typical

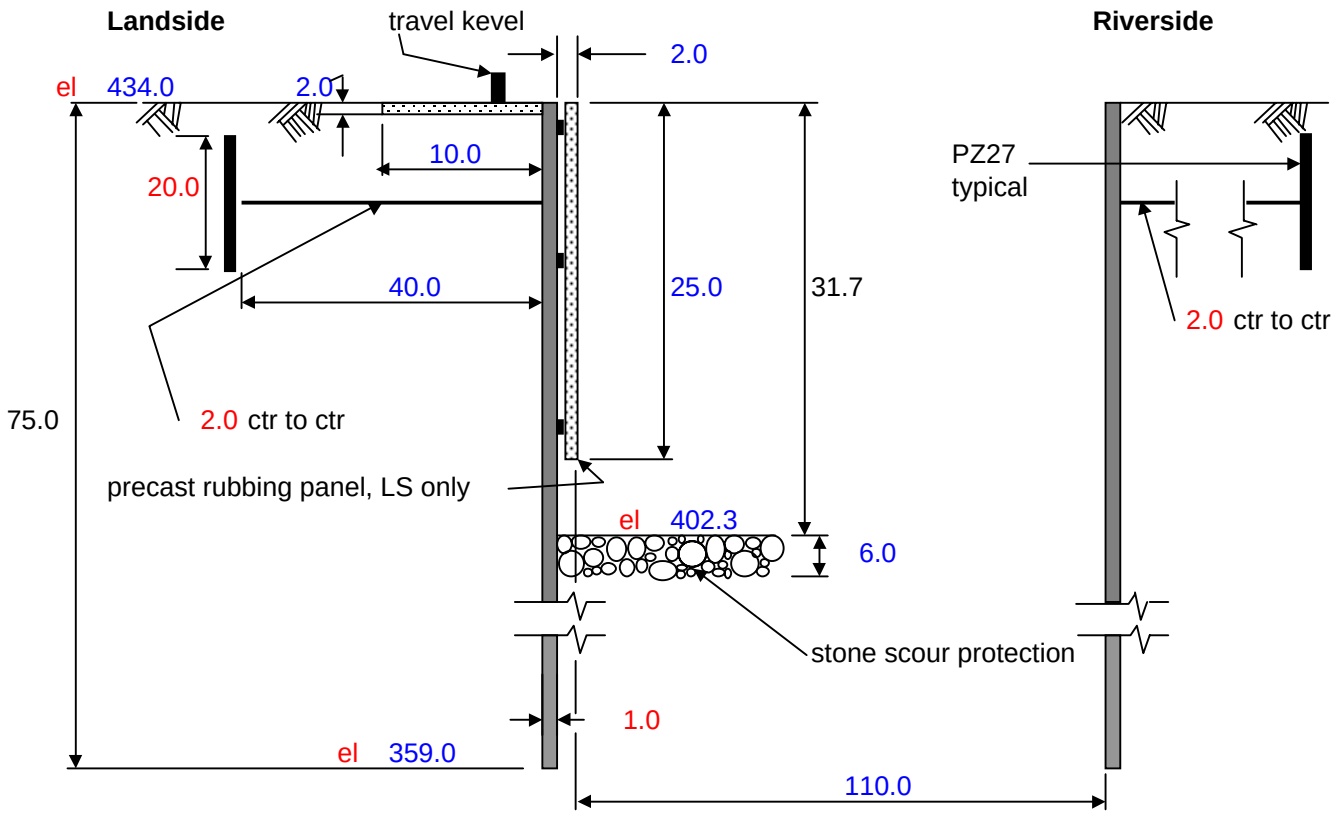

Tiebacks

LS = 544 ties, LF = 21,740
RS = 544 ties, LF = 21,740

PZ27 Sheetpile Anchor for the tiebacks

LS = 21,740 SF
RS = 21,740 SF

Rubbing Panel

Precast concrete = 54,350 CF

Travel Kevel Slab

CIP = 21,740 CF of kevel slab concrete

Chamber Floor

scour stones = 730,464 CF, in chamber floor

Excavation & Fill

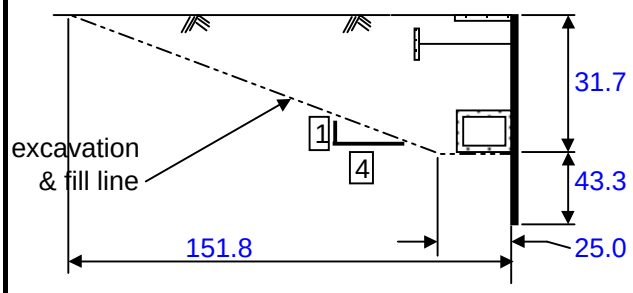

Excavation:

Outside Chamber = 144,162 CY
Inside Chamber = 259,000 CY
Total = 403,162 CY

Fill:

Total = 151,293 CY (Includes compaction factor)

Subject	PILE FOUNDED LOCKS 1200 ft locks Location 1 Quantities for Type C Lock, LaGrange L/D	Date 11-Feb-97
Computed by Hans Drehsler	Checked David R. Wehrley	Sheet of 5 6

LOCK CHAMBER WALLS:

A. WALL MONOLITHS

1. Land side walls

(a) PZ40 Sheet piling

Total = 81,525 SF

(c) Cast in place concrete, (travel kevel slab)

Total = 805 CY

(d) Precast concrete, (culvert)

Total = 5,480 CY

(e) Precast concrete, (panels)

Total = 2,013 CY

(e) PZ27 sheet pile tieback anchor

Total = 21,740 CY

(f) Ties

Total = 544

1. River side walls

(a) PZ40 Sheet piling

Total = 81,525 SF

(b) PZ27 sheet pile tieback anchor

Total = 21,740 SF

(c) Ties

Total = 544

B. GATE MONOLITHS

1. **Upstream** cast in place concrete

Volume = 17,520 CY

2. Floor slab between the monoliths

Volume = 12,279 CY

1. **Downstream** cast in place concrete

Volume = 21,811 CY

2. Floor slab between the monoliths

Volume = 9,411 CY

SILLS:

Length = 120.0 ft

Width = 111.0 ft

Height = 2.0 ft **Volume =** 1,973 CY of CIP concrete

Subject	PILE FOUNDED LOCKS 1200 ft locks Location 1 Quantities for Type C Lock, LaGrange L/D	Date 11-Feb-97
Computed by Hans Drehsler	Checked David R. Wehrley	Sheet 6 of 6

SUMMARY:

1. CONCRETE (CIP, Cast in place)

Total = 63,800 CY

2. CONCRETE, Precast

Total = 7,500 CY

3. TIES

Total = 1,100.0

Total = 43,500 LF

4. SHEET PILES, PS31

Total = 163,100 SF

4A. SHEET PILES, PZ27

Total = 43,500 SF

5. HP PILES, HP14X117

Total = 1,630 piles

Total = 93,200 LF

6. SCOUR STONE

Total = 27,100 CY

7. FILL FOR CULVERT PLACEMENT

Total = 151,300 CY

8. TEMPORARY SHEET PILE

Total = 50,000 SF

9. EXCAVATION

Total = 400,000 CY

LAGRANGE LOCK AND DAM, LOCATION 2, TYPE B
(PILE-FOUNDED)

CCOUNT CODE	ITEM	QUANTITY	UNIT	UNIT PRICE ($'s)	AMOUNT ($1,000's)
01.	**LANDS AND DAMAGES**				
	REAL ESTATE	1	JOB	SUM	30
04.	**DAMS**				
	04 DAMS SUBTOTAL				0
05.	**LOCKS**				
	SITEWORK				
	MOBILIZATION	1	JOB	SUM	10,650
	DEMOLITION	1	JOB	SUM	1,910
	EXCAVATION	27,090	CY	4.5	122
	BACKFILL	22,000	CY	6.25	138
	WALL FILL	8,899	CY	10.00	89
	SCOUR PROTECTION	429	TN	20.00	9
	SCOUR STONE IN LOCK FLOOR	9,030	TN	25.00	226
	FOUNDATION/LOCK DEWATERING	1	JOB	SUM	3,000
	MARINE FACILITIES, TEMP. MOORING STR.	1	JOB	SUM	3,900
	CONCRETE				
	UNDERBASE GROUTING	5,297	CY	200	1,059
	CAST IN PLACE REINFORCED CONCRETE	49,931	CY	217	10,835
	PRECAST CONCRETE	8,588	CY	400	3,435
	TREMIE CONCRETE	5,651	CY	165	932
	POST TENSION STEEL	135,000	LB	2.5	338
	FURNISH AND SET LANDING PADS	74	EA	19000	1,406
	SET PRECAST WALL UNITS	28	EA	16000	448
	FLOAT IN AND SET FLOOR UNITS	26	EA	16000	416
	FLOAT IN AND SET MITER GATE SILL	1	JOB	SUM	140
	STEEL REINFORCEMENT	2,996,000	LB	0.75	2,247
	METALS				
	SHEET PILING	57,878	SF	21.52	1,246
	WALL UNIT BRACING	1	JOB	SUM	250
	FOUNDATION PILING AND TESTING	1	JOB	SUM	5,300
	STRUCTURAL STEEL (GATES, VALVES, TRASHRACKS, BU	1	JOB	SUM	11,613
	STRUCTURAL STEEL (MISCELLANEOUS - LADDERS, ETC.	1	JOB	SUM	3,040
	ELECTRICAL				
	ELECTRICAL SYSTEM	1	JOB	SUM	4,700
	INSTRUMENTATION	1	JOB	SUM	1,250
	MECHANICAL				
	GATE AND VALVE OPERATING MACHINERY	1	JOB	SUM	2,750
	MECHANICAL SYSTEMS	1	JOB	SUM	3,200
	MISCELLANEOUS	1	JOB	SUM	1,950
	05 LOCKS SUBTOTAL				76,598
05.60.	**GUIDEWALLS**				
	SITEWORK				
	EXCAVATION	118,490	CY	4.5	533
	BACKFILL	73,640	CY	10	736
	SCOUR PROTECTION	18,900	TON	15	284
	CONCRETE				
	42" DIAMETER PILES	2,142	LF	400	857
	CAST IN PLACE REINFORCED CONCRETE	1,570	CY	150	236
	PRECAST BEAMS	10,900	CY	500	5,450
	PRECAST BEAM SEATS	165	CY	1000	165
	TREMIE CONCRETE	130	CY	500	65
	PERMANENT CELL FILL (C0NCRETE)	13,176	CY	200	2,635
	GROUT FOR BEAMS	490	CY	1000	490
	STEEL REINFORCEMENT	1,840,000	LB	0.75	1,380
	GRAVEL FILL	25,854	CY	10	259
	METALS				
	SHEET PILING FOR CELLS (PS31)	164,749	SF	25.00	4,119
	SHEET PILE CUTOFF WALL (PZ35)	41,847	SF	30.00	1,255
	SHEET PILE RETAINING WALL (PZ40)	39,873	SF	30.00	1,196
	FOUNDATION PILING		JOB	SUM	318
	POST TENSIONING	1,280	LF	30	38
	STRUCTURAL STEEL	1	JOB	SUM	4,060
	05.60 GUIDEWALLS SUBTOTAL				24,076
	PROJECT SUBTOTAL				100,704
	CONTINGENCIES 25%				25,176
	PROJECT SUBTOTAL WITH CONTINGENCIES				126,000
30.	**PLANNING, ENGINEERING, AND DESIGN (10%)**				13,000
31.	**CONSTRUCTION MANAGEMENT (10%)**				13,000
	PROJECT TOTAL				$ 152,000

		QUANTITY CALCULATIONS									
	L/D LaGrange, Location 2, Type B, Pile Founded							Sheet 1_ of 3____			
1	Remove existing sill down to										
	elev. 405.33	25	x	2	x	110	=	5,500.00	CF	203.70	CY
2	Remove existing 2' thick slab	95.25	x	2	x	110	=	20,955.00	CF	776.11	CY
3	Demolish existing guidewall, to										
	include timber crib and pile	502	x	30	x	53	=	798,180.00	CF	29,562.22	CY
4	Install sheet piling, PZ27	43.0	x	673	x	2	=	57,878.00	SF		
5	Excavation	6.3	x	172		675	=	731,430.00	CF	27,090.00	CY
6	Place scour stone	1.5	x	172	x	675	=	174,150.00	CF	6,450.00	CY
7	Place scour protection (riprap)	3	x	25	x	110	=	8,250.00	CF	305.56	CY
8	Install piling, HP 14 x 89										
	(54 ea per monolith @ 50' long										
	for 28 monoliths)	54	x	50	x	28	=	75,600.00	LF		
	Lockwall/floor connection										
9	HP14 x 117 stud w/welded ribs	23	x	2	=	46	EA				
	thixotropic grout @ HP studs	23.5	x	46	=	1,081.00	CF				
	thixotropic grout @ joints per ft	0.25	x	5	x	1296	=	1,620.00	CF		
10	Grout under base filling	2	x	650	x	110	=	143,000.00	CF	5,296.30	CY
11	Install piling, HP 14 x 89										
	(5 ea per floor unit @ 45' long										
	for 26 floor units	5	x	45	x	26	=	5,850.00	LF		
							=	26	EA		
12	Sand infill of floor units, large	((9.25' x 6.25' x2)+(19.75' x 6.25' x 4))x 510'					=	310,794.00	CF		
	" " " " " , small	((9.25' x 3' x 2)+(19.75' x 3' x 4)) x 66'					=	19,305.00	CF		
								330,099.00	CF	12,225.89	CY
13	Concrete										
	riverward wall										
	-bottom lift (tremie)	5.5	x	23	x	603	=	76,279.50	CF		
	-2nd lift (reinforced)	4	x	28	x	603	=	67,536.00	CF		
	-3rd lift (reinforced)inside	12.7	x	7.75	x	603	=	59,350.27	CF		
	- " " " outside	12.7	x	7.75	x	603	=	59,350.27	CF		
	-4th lift (reinforced)	8.5	x	26	x	603	=	133,263.00	CF		
	-5th lift (reinforced)inside	10.5	x	28	x	603	=	177,282.00	CF		
	-5th lift (reinforced)outside	10.5	x	28	x	603	=	177,282.00	CF		
14	Concrete							750,343.05	CF	27,790.48	CY
	landward wall										
	-bottom lift (tremie)	5.5	x	23	x	603	=	76,279.50	CF		
	-2nd lift (reinforced)	4	x	28	x	603	=	67,536.00	CF		
	-3rd lift (reinforced)inside	12.7	x	7.75	x	603	=	59,350.27	CF		
	- " " " outside	12.7	x	7.75	x	603	=	59,350.27	CF		
	-4th lift (reinforced)	8.5	x	26	x	603	=	133,263.00	CF		
	-5th lift (reinforced)inside	10.5	x	28	x	603	=	177,282.00	CF		
	-5th lift (reinforced)outside	10.5	x	28	x	603	=	177,282.00	CF		
								750,343.05	CF	27,790.48	CY
	Total Concrete									55,580.97	CY

LAGRANGE LOCK AND DAM, LOCATION 2, TYPE C
(PILE-FOUNDED)

CCOUNT CODE	ITEM	QUANTITY	UNIT	UNIT PRICE ($'s)	AMOUNT ($1,000's)
01.	**LANDS AND DAMAGES**				
	REAL ESTATE	1	JOB	SUM	30
04.	**DAMS**				
	04 DAMS SUBTOTAL				0
05.	**LOCKS**				
	SITEWORK				
	MOBILIZATION	1	JOB	SUM	10,650
	DEMOLITION	1	JOB	SUM	1,910
	EXCAVATION	19,440	CY	4.5	87
	BACKFILL	19,700	CY	10.00	197
	SCOUR PROTECTION	2,000	TN	15.00	30
	SCOUR STONE IN LOCK FLOOR	16,860	TN	15.00	253
	GRAVEL FILTER IN LOCK FLOOR	16,090	TN	20.00	322
	FOUNDATION/LOCK DEWATERING	1	JOB	SUM	3,000
	MARINE FACILITIES, TEMP. MOORING STR.	1	JOB	SUM	3,900
	CONCRETE				
	STRUCTURAL GROUTING	700	CY	200	140
	CAST IN PLACE REINFORCED CONCRETE	30,836	CY	217	6,691
	CAST IN PLACE CONNECTIONS	200	CY	725	145
	PRECAST CONCRETE	9,792	CY	400	3,917
	TREMIE CONCRETE, BASE .	3,574	CY	165	590
	PRECAST FLOOR PANELS	8,210	CY	286	2,348
	POST TENSION STEEL	185,300	LB	2.5	463
	FURNISH AND SET LANDING PADS	74	EA	19000	1,406
	SET PRECAST WALL UNITS	28	EA	16000	448
	FLOAT IN AND SET MITER GATE SILL	1	JOB	SUM	140
	STEEL REINFORCEMENT	1,851,000	LB	0.75	1,388
	METALS				
	SHEET PILING	47,110	SF	21.52	1,014
	WALL UNIT BRACING	1	JOB	SUM	250
	FOUNDATION PILING AND TESTING	1	JOB	SUM	3,487
	STRUCTURAL STEEL (GATES, VALVES, TRASHRACKS, B	1	JOB	SUM	11,613
	STRUCTURAL STEEL (MISCELLANEOUS - LADDERS, ET	1	JOB	SUM	3,040
	ELECTRICAL				
	ELECTRICAL SYSTEM	1	JOB	SUM	4,700
	INSTRUMENTATION	1	JOB	SUM	1,250
	MECHANICAL				
	GATE AND VALVE OPERATING MACHINERY	1	JOB	SUM	2,750
	MECHANICAL SYSTEMS	1	JOB	SUM	3,200
	MISCELLANEOUS	1	JOB	SUM	1,950
	05 LOCKS SUBTOTAL				71,279
05.60.	**GUIDEWALLS**				
	SITEWORK				
	EXCAVATION	118,490	CY	4.5	533
	BACKFILL	73,640	CY	10	736
	SCOUR PROTECTION	18,900	TON	15	284
	CONCRETE				
	42" DIAMETER PILES	2,142	LF	400	857
	CAST IN PLACE REINFORCED CONCRETE	1,570	CY	150	236
	PRECAST BEAMS	10,900	CY	500	5,450
	PRECAST BEAM SEATS	165	CY	1000	165
	TREMIE CONCRETE	130	CY	500	65
	PERMANENT CELL FILL (C0NCRETE)	12,987	CY	200	2,597
	GROUT FOR BEAMS	490	CY	1000	490
	STEEL REINFORCEMENT	1,840,000	LB	0.75	1,380
	GRAVEL FILL	25,472	CY	10	255
	METALS				
	SHEET PILING FOR CELLS (PS31)	164,749	SF	25.00	4,119
	SHEET PILE CUTOFF WALL (PZ35)	41,847	SF	30.00	1,255
	SHEET PILE RETAINING WALL (PZ40)	39,873	SF	30.00	1,196
	FOUNDATION PILING	1	JOB	SUM	318
	POST TENSIONING	1,280	LF	30	38
	STRUCTURAL STEEL	1	JOB	SUM	4,060
	05.60 GUIDEWALLS SUBTOTAL				24,034
	PROJECT SUBTOTAL				95,344
	CONTINGENCIES 25%				23,836
	PROJECT SUBTOTAL WITH CONTINGENCIES				119,000
30.	**PLANNING, ENGINEERING, AND DESIGN (10%)**				12,000
31.	**CONSTRUCTION MANAGEMENT (10%)**				12,000
	PROJECT TOTAL				$ 143,000

		QUANTITY CALCULATIONS									
	L/D LaGrange, Location 2, Type C, Pile Founded							Sheet 1_ of	3_		
1	Remove existing sill down to										
	elev. 577.83	25	x	2	x	110	=	5,500.00	CF	203.70	CY
2	Remove existing 2' thick slab	95.25	x	2	x	110	=	20,955.00	CF	776.11	CY
3	Demolish existing guidewall, to	502	x	30	x	53	=	798,180.00	CF	29,562.22	CY
	include timber crib and pile										
4	Install sheet piling, PZ27	35	x	673	x	2	=	47,110.00	SF		
5	Place scour stone (under walls)	1.5	x	60	x	600	=	54,000.00	CF	2,000.00	CY
6	Excavation	7.9	x	110	x	604	=	524,876.00	CF	19,439.85	CY
7	Install piling, HP 14 x 89										
	(24 ea per monolith @50' long										
	for 28 monoliths)	24	x	50	x	28	=	33,600.00	LF		
8	Steel footing box(1/2"steel plate)										
	riverward wall										
	20.42 lb x [(6'x3'x2)+(4'x3'x2)]=1,225 LB @ 30 locations							36,750.00	LB		
	landward wall										
	20.42 lb x [(6'x3'x2)+(4'x3'x2)]=1,225 LB @ 30 location							36,750.00	LB		
								73,500.00	LB		
9	Install piling, HP 14 x 89								or	2,722.22	TN
	for chamber floor paving blocks										
	(7 ea per joint @ 50' for 14 ea										
	joints)	53.8	x	7	x	14	=	5,272.40	LF		
10	Scour stone, (removed prior to										
	floor construction)	3	x	110	x	580	=	191,400.00	CF	7,088.89	CY
11	Filter layer	2	x	110	x	580	=	127,600.00	CF	4,725.93	CY
12	Filter gravel	2	x	110	x	580	=	127,600.00	CF	4,725.93	CY
13	Paving blocks (3'x30'x14')										
	1,260cf @ 8/row x 18 rows	1,260	x	8	x	18	=	181,440.00	CF	6,720.00	CY
14	Structural steel (per cell unit)										
	- W18 x 86 waler	86	x	154	=	13,244.00					
	- W18 x 86 brace	86	x	22	=	1,892.00					
	- C12 x 25 diagonal brace	25	x	232	=	5,800.00					
	(There are 30 cell units, 15 in each wall)					20,936.00	x	30	=	628,080.00	LB
									or	314.04	TN
15	Precast liner										
	riverward wall	19.0	x	603	x	1	=	11,457.00	CF		
	landward wall	19.0	x	603	x	1	=	11,457.00	CF		
								22,914.00	CF		
									or	848.67	CY
16	Precast concrete miter gate sill										
	and wall monoliths										
	Taken from quantity calc's from St. Paul District's Microstation analysis										
						- Slab volume			=	1,434.50	CY
						- Wall volume			=	771.32	CY
						- Concrete strut volume			=	17.25	CY
	Total Precast Concrete Volume for Miter Gate Sill & Wall Monoliths								=	2,223.07	CY
											Lgr2cpf

ACCOUNT CODE	ITEM	QUANTITY	UNIT	UNIT PRICE ($'s)	AMOUNT ($1,000's)	
01.	LANDS AND DAMAGES					
	REAL ESTATE	1	JOB	SUM	1,560	
02.	RELOCATION	1	JOB	SUM	11,010	
04.	DAMS				0	
05.	LOCKS					
	SITEWORK					
	MOBILIZATION	1	JOB	SUM	8,000	
	DEMOLITION	1	JOB	SUM	500	
	EXCAVATION/ DREDGING	430,000	CY	5.50	2,365	
	BACKFILL	166,000	CY	6.25	1,038	
	ROCK EXCAVATION	0	CY	45.00	0	
	SCOUR PROTECTION	27,100	TN	15.00	407	
	FOUNDATION DEWATERING	1	JOB	SUM	200	
	CONCRETE					
	CAST IN PLACE REINFORCED CONCRETE	64,700	CY	280.00	18,116	
	PRECAST CONCRETE WALL PANELS	2,013	CY	400.00	805	
	PRECAST CONCRETE CULVERT	5,480	CY	700.00	3,836	
	METALS					
	TIES, ANCHOR	1,100	EA	2,500.00	2,750	
	SHEETPILING - TEMPORARY (FOR DEWATERING)	50,000	SF	25.00	1,250	
	SHEETPILING - PERMANENT (PS 31)	163,100	SF	30.00	4,893	
	SHEETPILING - PERMANENT (PZ 27)	43,500	SF	30.00	1,305	
	STRUCTURAL STEEL (GATES, VALVES, TRASHRACKS, OTHER)	1	JOB	SUM	3,200	
	STRUCTURAL STEEL (MISCELLANEOUS - LADDERS, ETC.)	1	JOB	SUM	3,000	
	HP 14X117 PILING	93,200	LF	50.00	4,660	
	ELECTRICAL					
	ELECTRICAL SYSTEM	1	JOB	SUM	4,700	
	INSTRUMENTATION	1	JOB	SUM	1,000	
	MECHANICAL					
	GATE AND VALVE OPERATING MACHINERY	1	JOB	SUM	2,053	
	MECHANICAL SYSTEMS	1	JOB	SUM	3,100	
	MISCELLANEOUS	1	JOB	SUM	6,718	
	05 LOCKS SUBTOTAL				73,895	
05.60.	GUIDEWALLS					
	CONCRETE					
	CAST IN PLACE REINFORCED CONCRETE	2,300	CY	280.00	644	
	PRECAST CONCRETE (PRESTRESSED)	6,000	LF	1,170.00	7,020	
	PRECAST CONCRETE (W/REINFORCEMENT)	3,000	CY	400.00	1,200	
	TREMIE CONCRETE (WITH REINFORCEMENT)	15,200	CY	210.00	3,192	
	GRAVEL FILL	29,600	CY	15.00	444	
	METALS					
	SHEETPILING FOR CELLS (PS31)	185,400	SF	25.00	4,635	
	SHEETPILE RETAINING WALL (PZ35) - DOWNSTREAM	32,800	SF	30.00	984	
	STRUCTURAL STEEL	1	JOB	SUM	3,811	
	05.60 GUIDEWALLS SUBTOTAL				21,930	
09.	CHANNEL WORK	1	JOB	SUM	2,460	
	PROJECT SUBTOTAL				110,855	
	CONTINGENCIES (25%)				27,714	27,714
	PROJECT SUBTOTAL WITH CONTINGENCIES				138,569	
30.	PLANNING, ENGINEERING, AND DESIGN (10%)				14,000	
31.	CONSTRUCTION MANAGEMENT (10%)				14,000	
	PROJECT TOTAL				166,569	

TOTAL BASIC LOCK COST (O4., 05., 05.60.) WITH CONTINGENCIES, PED, & CM* **$ 167,000**

*(EXCLUDES REAL ESTATE, RELOCATION, AND CHANNEL WORK WHICH ARE MORE SITE-SPECIFIC.)

Subject	PILE FOUNDED LOCKS 1200 ft locks Location 1 Quantities for Type C Lock, Peoria L/D	Date 11-Feb-97
Computed by Hans Drehsler	Checked David R. Wehrley	Sheet of 1 6

DS Gate Monolith

Note: For quantities change the RED values in the cells of the dimensioned cross section shown.

Landside **Riverside**

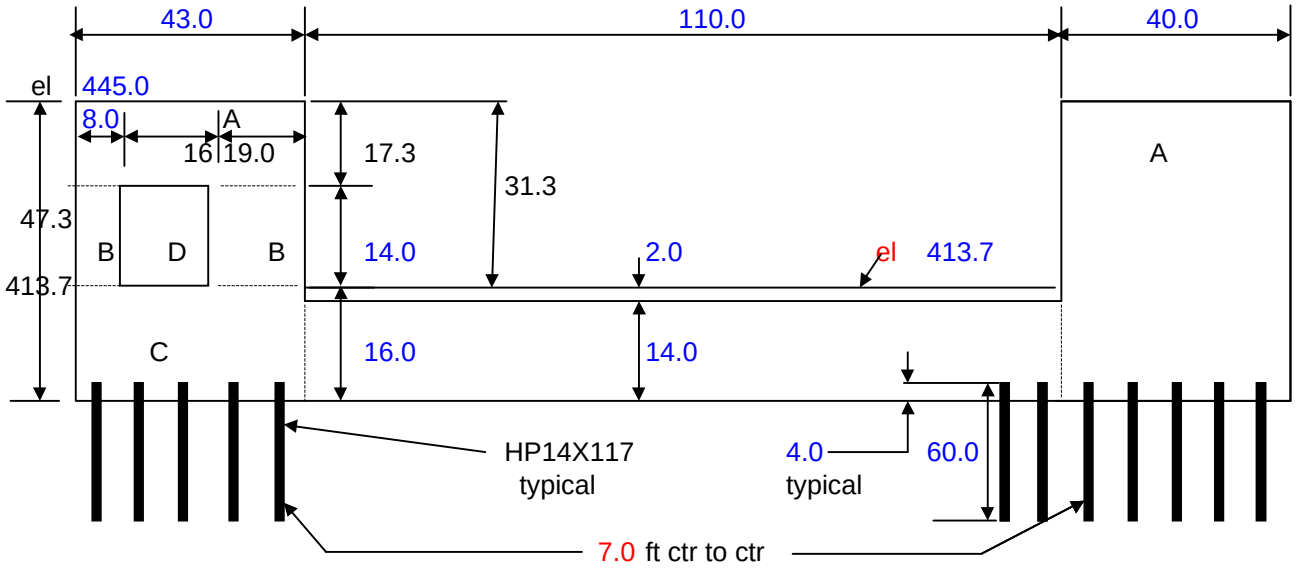

DS length = 165.0 ft

Gate monolith with culvert

DS Cast in place concrete

A =	744	SF	
B =	378	SF	
C =	688	SF	
D =	224	SF	CULVERT
Total =	1,810	SF	

Gate monolith without culvert

DS Cast in place concrete

A =	1,892	SF
Total =	1,892	SF

Linear Feet of H-Piling

Total = 38,994 LF

Subject	PILE FOUNDED LOCKS 1200 ft locks Location 1 Quantities for Type C Lock, Peoria L/D	Date 11-Feb-97
Computed by Hans Drehsler	Checked David R. Wehrley	Sheet of 2 6

US Gate Monolith

Note: For quantities change the RED values in the cells of the dimensioned cross section shown.

Landside **Riverside**

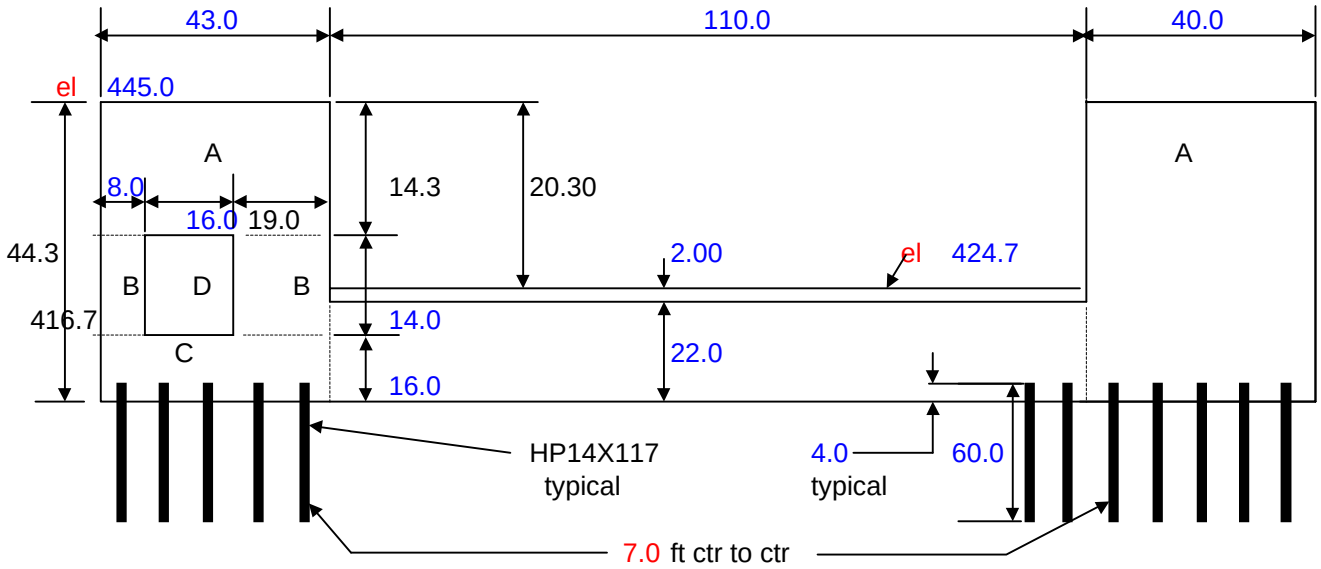

US length = 137.0 ft

Gate monolith with culvert

US Cast in place concrete

A =	615	SF	
B =	378	SF	
C =	688	SF	
D =	224	SF	CULVERT
Total =	1,681	SF	

Gate monolith without culvert

US Cast in place concrete

A =	1,772	SF
Total =	1,772	SF

Linear Feet of H-Piling

Total = 32,377 LF

Subject	PILE FOUNDED LOCKS 1200 ft locks Location 1 Quantities for Type C Lock, Peoria L/D	Date 11-Feb-97
Computed by Hans Drehsler	Checked David R. Wehrley	Sheet of 3 6

Box fill / empty culvert, one only

Note: For quantities change the RED values in the cells of the dimensioned cross section shown.

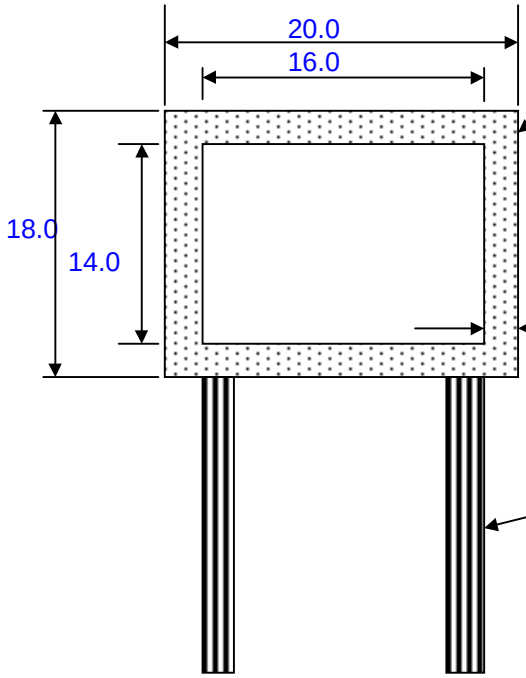

Pre cast concrete culvert

A = 136.0 SF

Total = 136.0 SF

Length of culvert = 1,088 ft, landside only

Total = 435 piles

2.0
typical

Total = 21,760 LF

HP 14X117
50.0 ft long
5.0 ft ctr to ctr along horizontal axis

Sheet piling for lock walls
PZ40 piling, typical

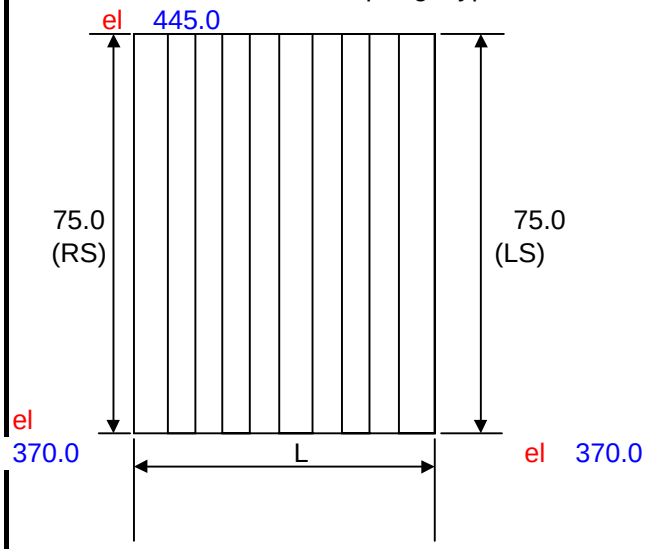

Pile type: PS31
Choose, PSA23, PS27.5, or PS31

Length = 1.64 ft

LS number of sheet piles = 663 piles

RS number of sheet piles = 663 piles

LS sheet piling = 81,525 SF

RS sheet piling = 81,525 SF

L = **LS** lngth = 1,087.0 ft

L = **RS** lngth = 1,087.0 ft

Subject	PILE FOUNDED LOCKS 1200 ft locks Location 1 Quantities for Type C Lock, Peoria L/D	Date 11-Feb-97
Computed by Hans Drehsler	Checked David R. Wehrley	Sheet of 4 6

Tiebacks, typical

Note: For quantities change the RED values in the cells of the dimensioned cross section shown.

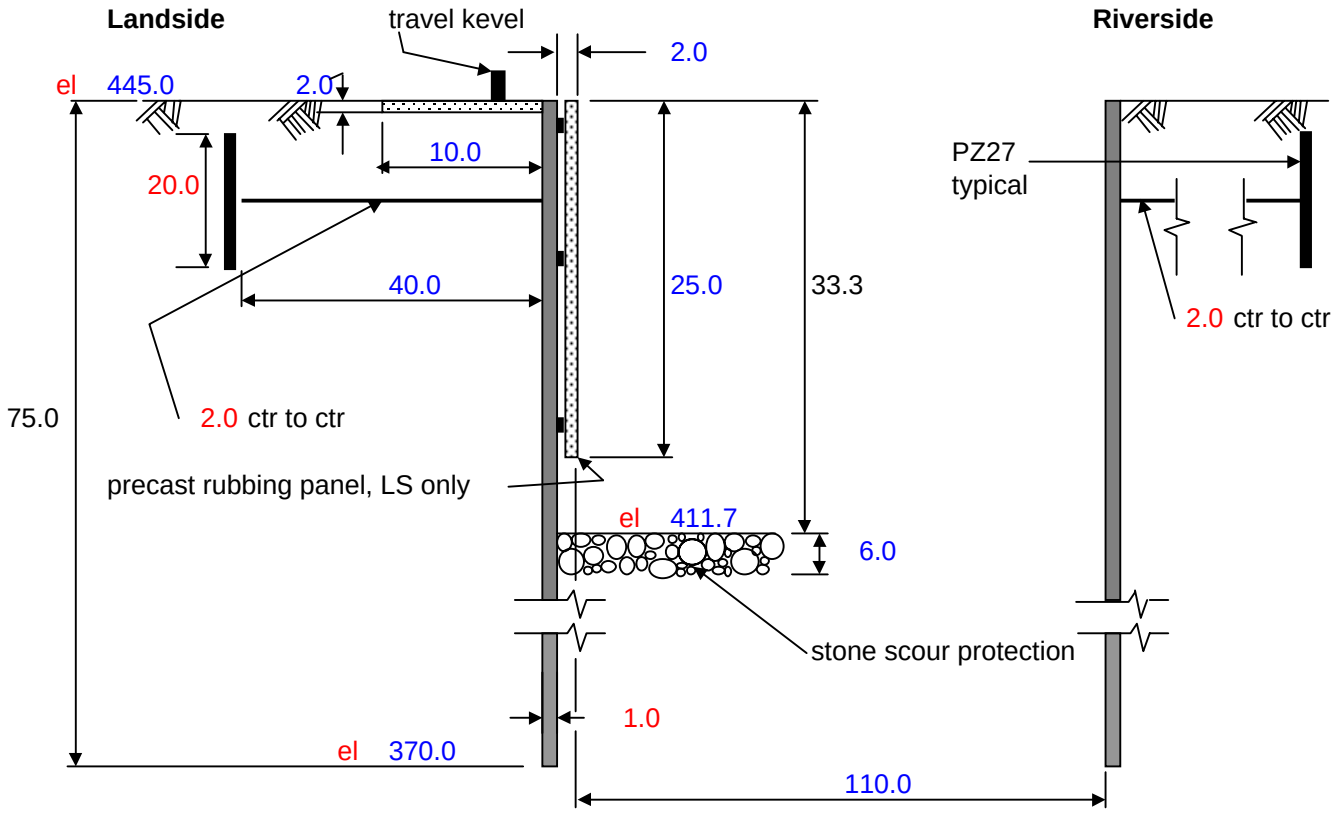

Tiebacks

LS = 544 ties, LF = 21,740
RS = 544 ties, LF = 21,740

PZ27 Sheetpile Anchor for the tiebacks

LS = 21,740 SF
RS = 21,740 SF

Rubbing Panel

Precast concrete = 54,350 CF

Travel Kevel Slab

CIP = 21,740 CF of kevel slab concrete

Chamber Floor

scour stones = 730,464 CF, in chamber floor

Excavation & Fill

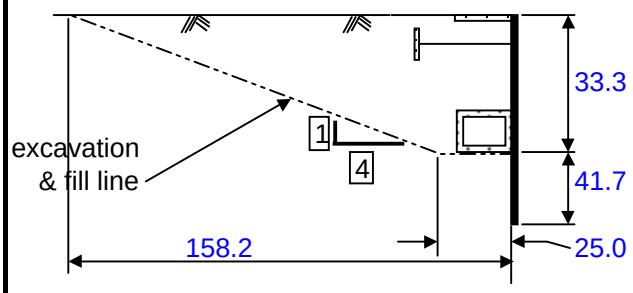

Excavation:

Outside Chamber = 156,920 CY
Inside Chamber = 269,000 CY
Total = 425,920 CY

Fill:

Total = 165,965 CY (Includes compaction factor)

Subject	PILE FOUNDED LOCKS 1200 ft locks Location 1 Quantities for Type C Lock, Peoria L/D	Date 11-Feb-97
Computed by Hans Drehsler	Checked David R. Wehrley	Sheet 5 of 6

LOCK CHAMBER WALLS:

A. WALL MONOLITHS

1. Land side walls

(a) PZ40 Sheet piling

Total = 81,525 SF

(c) Cast in place concrete, (travel kevel slab)

Total = 805 CY

(d) Precast concrete, (culvert)

Total = 5,480 CY

(e) Precast concrete, (panels)

Total = 2,013 CY

(e) PZ27 sheet pile tieback anchor

Total = 21,740 CY

(f) Ties

Total = 544

1. River side walls

(a) PZ40 Sheet piling

Total = 81,525 SF

(b) PZ27 sheet pile tieback anchor

Total = 21,740 SF

(c) Ties

Total = 544

B. GATE MONOLITHS

1. **Upstream** cast in place concrete

Volume = 17,520 CY

2. Floor slab between the monoliths

Volume = 12,279 CY

1. **Downstream** cast in place concrete

Volume = 22,623 CY

2. Floor slab between the monoliths

Volume = 9,411 CY

SILLS:

Length = 120.0 ft

Width = 111.0 ft

Height = 2.0 ft **Volume =** 1,973 CY of CIP concrete

Subject	PILE FOUNDED LOCKS 1200 ft locks Location 1 Quantities for Type C Lock, Peoria L/D	Date 11-Feb-97
Computed by Hans Drehsler	Checked David R. Wehrley	Sheet 6 of 6

SUMMARY:

1. CONCRETE (CIP, Cast in place)

Total = 64,700 CY

2. CONCRETE, Precast

Total = 7,500 CY

3. TIES

Total = 1,100.0

Total = 43,500 LF

4. SHEET PILES, PS31

Total = 163,100 SF

4A. SHEET PILES, PZ27

Total = 43,500 SF

5. HP PILES, HP14X117

Total = 1,630 piles

Total = 93,200 LF

6. SCOUR STONE

Total = 27,100 CY

7. FILL FOR CULVERT PLACEMENT

Total = 166,000 CY

8. TEMPORARY SHEET PILE

Total = 50,000 SF

9. EXCAVATION

Total = 430,000 CY

PEORIA LOCK AND DAM , LOCATION 2, TYPE B
(PILE-FOUNDED)

CCOUNT CODE	ITEM	QUANTITY	UNIT	UNIT PRICE ($'s)	AMOUNT ($1,000's)
01.	**LANDS AND DAMAGES**				
	REAL ESTATE	1	JOB	SUM	1,300
02.	**RELOCATIONS**				
	RELOCATIONS SUBTOTAL	1	JOB	SUM	1,020
04.	**DAMS**				
	04 DAMS SUBTOTAL				0
05.	**LOCKS**				
	SITEWORK				
	MOBILIZATION	1	JOB	SUM	10,650
	DEMOLITION	1	JOB	SUM	1,910
	EXCAVATION	27,090	CY	4.5	122
	BACKFILL	22,000	CY	6.25	138
	WALL FILL	8,251	CY	10.00	83
	SCOUR PROTECTION	429	TN	20.00	9
	SCOUR STONE IN LOCK FLOOR	9,030	TN	25.00	226
	FOUNDATION/LOCK DEWATERING	1	JOB	SUM	3,000
	MARINE FACILITIES, TEMP. MOORING STR.	1	JOB	SUM	3,900
	CONCRETE				
	UNDERBASE GROUTING	5,297	CY	200	1,059
	CAST IN PLACE REINFORCED CONCRETE	36,969	CY	217	8,022
	PRECAST CONCRETE	8,633	CY	400	3,453
	TREMIE CONCRETE	5,651	CY	165	932
	POST TENSION STEEL	135,000	LB	2.5	338
	FURNISH AND SET LANDING PADS	74	EA	19000	1,406
	SET PRECAST WALL UNITS	28	EA	16000	448
	FLOAT IN AND SET FLOOR UNITS	26	EA	16000	416
	FLOAT IN AND SET MITER GATE SILL	1	JOB	SUM	140
	STEEL REINFORCEMENT	2,219,000	LB	0.75	1,664
	METALS				
	SHEET PILING	57,878	SF	21.52	1,246
	WALL UNIT BRACING	1	JOB	SUM	250
	FOUNDATION PILING AND TESTING	1	JOB	SUM	5,300
	STRUCTURAL STEEL (GATES, VALVES, TRASHRACKS, B	1	JOB	SUM	11,613
	STRUCTURAL STEEL (MISCELLANEOUS - LADDERS, ET	1	JOB	SUM	3,040
	ELECTRICAL				
	ELECTRICAL SYSTEM	1	JOB	SUM	4,700
	INSTRUMENTATION	1	JOB	SUM	1,250
	MECHANICAL				
	GATE AND VALVE OPERATING MACHINERY	1	JOB	SUM	2,750
	MECHANICAL SYSTEMS	1	JOB	SUM	3,200
	MISCELLANEOUS	1	JOB	SUM	1,950
	05 LOCKS SUBTOTAL				73,214
05.60.	**GUIDEWALLS**				
	SITEWORK				
	EXCAVATION	118,490	CY	4.5	533
	BACKFILL	73,640	CY	10	736
	SCOUR PROTECTION	18,900	TON	15	284
	CONCRETE				
	42" DIAMETER PILES	3,234	LF	400	1,294
	CAST IN PLACE REINFORCED CONCRETE	1,570	CY	150	236
	PRECAST BEAMS	10,900	CY	500	5,450
	PRECAST BEAM SEATS	165	CY	1000	165
	TREMIE CONCRETE	130	CY	500	65
	PERMANENT CELL FILL (C0NCRETE)	13,516	CY	200	2,703
	GROUT FOR BEAMS	490	CY	1000	490
	STEEL REINFORCEMENT	1,840,000	LB	0.75	1,380
	GRAVEL FILL	26,542	CY	10	265
	METALS				
	SHEET PILING FOR CELLS (PS31)	169,418	SF	25.00	4,235
	SHEET PILE CUTOFF WALL (PZ35)	69,185	SF	30.00	2,076
	FOUNDATION PILING		JOB	SUM	318
	POST TENSIONING	1,280	LF	30	38
	STRUCTURAL STEEL	1	JOB	SUM	4,060
	05.60 GUIDEWALLS SUBTOTAL				24,328
09.	**CHANNEL WORK**	1	JOB	SUM	300
	PROJECT SUBTOTAL				100,162
	CONTINGENCIES 25%				25,041
	PROJECT SUBTOTAL WITH CONTINGENCIES				125,000
30.	**PLANNING, ENGINEERING, AND DESIGN (10%)**				13,000
31.	**CONSTRUCTION MANAGEMENT (10%)**				13,000
	PROJECT TOTAL				$ 151,000

		QUANTITY CALCULATIONS									
	L/D Peoria, Location 2, Type B, Pile Founded							Sheet 1_ of 3____			
1	Remove existing sill down to										
	elev. 405.33	25	x	2	x	110	=	5,500.00	CF	203.70	CY
2	Remove existing 2' thick slab	95.25	x	2	x	110	=	20,955.00	CF	776.11	CY
3	Demolish existing guidewall, to										
	include timber crib and pile	502	x	30	x	53	=	798,180.00	CF	29,562.22	CY
4	Install sheet piling, PZ27	43.0	x	673	x	2	=	57,878.00	SF		
5	Excavation	6.3	x	172		675	=	731,430.00	CF	27,090.00	CY
6	Place scour stone	1.5	x	172	x	675	=	174,150.00	CF	6,450.00	CY
7	Place scour protection (riprap)	3	x	25	x	110	=	8,250.00	CF	305.56	CY
8	Install piling, HP 14 x 89										
	(54 ea per monolith @ 50' long										
	for 28 monoliths)	54	x	50	x	28	=	75,600.00	LF		
	Lockwall/floor connection										
9	HP14 x 117 stud w/welded ribs	23	x	2	=	46	EA				
	thixotropic grout @ HP studs	23.5	x	46	=	1,081.00	CF				
	thixotropic grout @ joints per ft	0.25	x	5	x	1296	=	1,620.00	CF		
10	Grout under base filling	2	x	650	x	110	=	143,000.00	CF	5,296.30	CY
11	Install piling, HP 14 x 89										
	(5 ea per floor unit @ 45' long										
	for 26 floor units	5	x	45	x	26	=	5,850.00	LF		
							=	26	EA		
12	Sand infill of floor units, large	((9.25' x 6.25' x2)+(19.75' x 6.25' x 4))x 510'					=	310,794.00	CF		
	" " " " " , small	((9.25' x 3' x 2)+(19.75' x 3' x 4)) x 66					=	19,305.00	CF		
								330,099.00	CF	12,225.89	CY
13	Concrete										
	riverward wall										
	-bottom lift (tremie)	5.5	x	23	x	603	=	76,279.50	CF		
	-2nd lift (reinforced)	4	x	28	x	603	=	67,536.00	CF		
	-3rd lift (reinforced)inside	13.3	x	7.75	x	603	=	62,154.23	CF		
	- " " " outside	13.3	x	7.75	x	603	=	62,154.23	CF		
	-4th lift (reinforced)	8.5	x	26	x	603	=	133,263.00	CF		
	-5th lift (reinforced)	5.0	x	28	x	603	=	84,420.00	CF		
	-6th lift (reinforced)outside	5.00	x	9	x	603	=	27,135.00	CF		
	- " " " inside	5.00	x	9	x	603	=	27,135.00	CF		
	-7th lift (reinforced)outside	6.5	x	9	x	603	=	35,275.50	CF		
								575,352.45	CF	21,309.35	CY
14	Concrete										
	landward wall										
	-bottom lift (tremie)	5.5	x	23	x	603	=	76,279.50	CF		
	-2nd lift (reinforced)	4	x	28	x	603	=	67,536.00	CF		
	-3rd lift (reinforced)inside	13.3	x	7.75	x	603	=	62,154.23	CF		
	- " " " outside	13.3	x	7.75	x	603	=	62,154.23	CF		
	-4th lift (reinforced)	8.5	x	26	x	603	=	133,263.00	CF		
	-5th lift (reinforced)	5.0	x	28	x	603	=	84,420.00	CF		
	-6th lift (reinforced)outside	5.00	x	9	x	603	=	27,135.00	CF		
	- " " " inside	5.00	x	9	x	603	=	27,135.00	CF		
	-7th lift (reinforced)outside	6.5	x	9	x	603	=	35,275.50	CF		
								575,352.45	CF	21,309.35	CY
	Total Concrete									42,618.70	CY
											Lpeo2bpf

PEORIA LOCK AND DAM, LOCATION 2, TYPE C
(PILE-FOUNDED)

CCOUNT CODE	ITEM	QUANTITY	UNIT	UNIT PRICE ($'s)	AMOUNT ($1,000's)
01.	**LANDS AND DAMAGES**				
	REAL ESTATE	1	JOB	SUM	1,300
02.	**RELOCATIONS**				
	RELOCATIONS SUBTOTAL	1	JOB	SUM	1,020
04.	**DAMS**				
	04 DAMS SUBTOTAL				0
05.	**LOCKS**				
	SITEWORK				
	MOBILIZATION	1	JOB	SUM	10,650
	DEMOLITION	1	JOB	SUM	1,910
	EXCAVATION	19,932	CY	4.5	90
	BACKFILL	19,700	CY	10.00	197
	SCOUR PROTECTION	2,000	TN	15.00	30
	SCOUR STONE IN LOCK FLOOR	16,860	TN	15.00	253
	GRAVEL FILTER IN LOCK FLOOR	16,090	TN	20.00	322
	FOUNDATION/LOCK DEWATERING	1	JOB	SUM	3,000
	MARINE FACILITIES, TEMP. MOORING STR.	1	JOB	SUM	3,900
	CONCRETE				
	STRUCTURAL GROUTING	700	CY	200	140
	CAST IN PLACE REINFORCED CONCRETE	31,251	CY	217	6,781
	CAST IN PLACE CONNECTIONS	200	CY	725	145
	PRECAST CONCRETE	9,258	CY	400	3,703
	TREMIE CONCRETE, BASE .	3,574	CY	165	590
	PRECAST FLOOR PANELS	8,210	CY	286	2,348
	POST TENSION STEEL	185,300	LB	2.5	463
	FURNISH AND SET LANDING PADS	74	EA	19000	1,406
	SET PRECAST WALL UNITS	28	EA	16000	448
	FLOAT IN AND SET MITER GATE SILL	1	JOB	SUM	140
	STEEL REINFORCEMENT	1,875,000	LB	0.75	1,406
	METALS				
	SHEET PILING	47,110	SF	21.52	1,014
	WALL UNIT BRACING	1	JOB	SUM	250
	FOUNDATION PILING AND TESTING	1	JOB	SUM	3,487
	STRUCTURAL STEEL (GATES, VALVES, TRASHRACKS, BU	1	JOB	SUM	11,613
	STRUCTURAL STEEL (MISCELLANEOUS - LADDERS, ETC.)	1	JOB	SUM	3,040
	ELECTRICAL				
	ELECTRICAL SYSTEM	1	JOB	SUM	4,700
	INSTRUMENTATION	1	JOB	SUM	1,250
	MECHANICAL				
	GATE AND VALVE OPERATING MACHINERY	1	JOB	SUM	2,750
	MECHANICAL SYSTEMS	1	JOB	SUM	3,200
	MISCELLANEOUS	1	JOB	SUM	1,950
	05 LOCKS SUBTOTAL				71,176
05.60.	**GUIDEWALLS**				
	SITEWORK				
	EXCAVATION	118,490	CY	4.5	533
	BACKFILL	73,640	CY	10	736
	SCOUR PROTECTION	18,900	TON	15	284
	CONCRETE				
	42" DIAMETER PILES	3,234	LF	400	1,294
	CAST IN PLACE REINFORCED CONCRETE	1,570	CY	150	236
	PRECAST BEAMS	10,900	CY	500	5,450
	PRECAST BEAM SEATS	165	CY	1000	165
	TREMIE CONCRETE	130	CY	500	65
	PERMANENT CELL FILL (C0NCRETE)	13,517	CY	200	2,703
	GROUT FOR BEAMS	490	CY	1000	490
	STEEL REINFORCEMENT	1,840,000	LB	0.75	1,380
	GRAVEL FILL	26,542	CY	10	265
	METALS				
	SHEET PILING FOR CELLS (PS31)	169,418	SF	25.00	4,235
	SHEET PILE CUTOFF WALL (PZ35)	69,176	SF	30.00	2,075
	FOUNDATION PILING	1	JOB	SUM	318
	POST TENSIONING	1,280	LF	30	38
	STRUCTURAL STEEL	1	JOB	SUM	4,060
	05.60 GUIDEWALLS SUBTOTAL				24,328
09.	**CHANNEL WORK**	1	JOB	SUM	300
	PROJECT SUBTOTAL				98,124
	CONTINGENCIES 25%				24,531
	PROJECT SUBTOTAL WITH CONTINGENCIES				123,000
30.	**PLANNING, ENGINEERING, AND DESIGN (10%)**				12,000
31.	**CONSTRUCTION MANAGEMENT (10%)**				12,000
	PROJECT TOTAL				$ 147,000

		QUANTITY CALCULATIONS									
	L/D Peoria, Location 2, Type C, Pile Founded							Sheet 1_ of	3_		
1	Remove existing sill down to										
	elev. 577.83	25	x	2	x	110	=	5,500.00	CF	203.70	CY
2	Remove existing 2' thick slab	95.25	x	2	x	110	=	20,955.00	CF	776.11	CY
3	Demolish existing guidewall, to	502	x	30	x	53	=	798,180.00	CF	29,562.22	CY
	include timber crib and pile										
4	Install sheet piling, PZ27	35	x	673	x	2	=	47,110.00	SF		
5	Place scour stone (under walls)	1.5	x	60	x	600	=	54,000.00	CF	2,000.00	CY
6	Excavation	8.1	x	110	x	604	=	538,164.00	CF	19,932.00	CY
7	Install piling, HP 14 x 89										
	(24 ea per monolith @50' long										
	for 28 monoliths)	24	x	50	x	28	=	33,600.00	LF		
8	Steel footing box(1/2"steel plate)										
	riverward wall										
	20.42 lb x [(6'x3'x2)+(4'x3'x2)]=1,225 LB @ 30 locations							36,750.00	LB		
	landward wall										
	20.42 lb x [(6'x3'x2)+(4'x3'x2)]=1,225 LB @ 30 location							36,750.00	LB		
								73,500.00	LB		
9	Install piling, HP 14 x 89								or	2,722.22	TN
	for chamber floor paving blocks										
	(7 ea per joint @ 50' for 14 ea										
	joints)	50.2	x	7	x	14	=	4,919.60	LF		
10	Scour stone, (removed prior to										
	floor construction)	3	x	110	x	580	=	191,400.00	CF	7,088.89	CY
11	Filter layer	2	x	110	x	580	=	127,600.00	CF	4,725.93	CY
12	Filter gravel	2	x	110	x	580	=	127,600.00	CF	4,725.93	CY
13	Paving blocks (3'x30'x14')										
	1,260cf @ 8/row x 18 rows	1,260	x	8	x	18	=	181,440.00	CF	6,720.00	CY
14	Structural steel (per cell unit)										
	- W18 x 86 waler	86	x	154	=	13,244.00					
	- W18 x 86 brace	86	x	22	=	1,892.00					
	- C12 x 25 diagonal brace	25	x	232	=	5,800.00					
	(There are 30 cell units, 15 in each wall)					20,936.00	x	30	=	628,080.00	LB
									or	314.04	TN
15	Precast liner										
	riverward wall	20.0	x	603	x	1	=	12,060.00	CF		
	landward wall	20.0	x	603	x	1	=	12,060.00	CF		
								24,120.00	CF		
									or	893.33	CY
16	Precast concrete miter gate sill										
	and wall monoliths										
	Taken from quantity calc's from St. Paul District's Microstation analysis										
						- Slab volume			=	1,434.50	CY
						- Wall volume			=	771.32	CY
						- Concrete strut volume			=	17.25	CY
	Total Precast Concrete Volume for Miter Gate Sill & Wall Monoliths								=	2,223.07	CY
											Lpeo2cpf

Appendix B: Performance Worksheets

			Former Double and Single Lockages								
			Existing 600' versus new1200' Locks			Existing 600' versus new1200' Locks					
			DOWNBOUND			UPBOUND					
			Average Total Lockage Time (min.)			Average Total Lockage Time (min.)					
Lock Site	Lock Alternative	Type	Fly	Exchange	Turn Back	Fly	Exchange	Turn Back	Average Downbound	Average Upbound	Total Average
L.G.	Existing Lock	Existing Lock	106.6	121.9	103.0	98.5	111.4	90.6	110.5	100.2	105.4
	1C	Former Dbs	56.7	71.1	63.9	55.9	68.8	56.3	63.9	60.3	62.1
		Former Sgls	32.3	40.9	44.1	33.0	43.0	43.8	39.1	39.9	39.5
	2R	Former Dbs	61.8	77.1	61.1	54.3	67.2	50.8	66.7	57.4	62.1
		Former Sgls	35.4	44.6	45.7	33.0	43.0	43.8	41.9	39.9	40.9
Peo.	Existing Lock	Existing Lock	111.7	119.0	105.8	103.8	113.5	96.7	112.2	104.6	108.4
	1C	Former Dbs	63.9	71.2	68.3	58.9	68.6	61.5	67.8	63.0	65.4
		Former Sgls	35.0	40.7	46.6	36.7	40.9	45.8	40.8	41.1	41.0
	2R	Former Dbs	65.6	72.9	63.2	56.9	66.6	55.2	67.2	59.6	63.4
		Former Sgls	36.4	42.3	47.3	36.7	40.9	45.8	42.0	41.1	41.6
25	Existing Lock	Existing Lock	113.7	111.7	105.1	96.5	101.3	90.9	110.2	96.2	103.2
	2R	Former Dbs	61.4	59.8	59.8	47.7	54.6	52.1	60.3	51.5	55.9
		Former Sgls	37.2	37.7	42.5	31.4	32.4	40.9	39.1	34.9	37.0
	3R	Former Dbs	54.4	52.1	49.3	50.6	53.6	50.1	51.9	51.4	51.7
		Former Sgls	36.7	37.9	38.3	30.4	31.4	38.9	37.6	33.6	35.6
24	Existing Lock	Existing Lock	118.2	122.6	112.0	102.1	105.3	94.7	117.6	100.7	109.2
	2R	Former Dbs	63.4	67.8	62.1	52.1	55.3	52.3	64.4	53.2	58.8
		Former Sgls	41.2	39.9	44.5	35.6	37.2	41.2	41.9	38.0	39.9
	3R	Former Dbs	58.8	59.5	49.3	49.2	54.3	50.3	55.9	51.3	53.6
		Former Sgls	39.8	38.7	38.3	34.6	36.2	39.2	38.9	36.7	37.8
22	Existing Lock	Existing Lock	142.5	121.4	109.1	118.2	112.2	91.8	124.3	107.4	115.9
	2R	Former Dbs	95.1	74.0	65.7	74.2	68.2	52.1	78.3	64.8	71.6
		Former Sgls	56.3	39.5	40.8	49.3	39.7	39.1	45.5	42.7	44.1
	3R	Former Dbs	76.1	62.9	47.2	71.3	67.2	52.1	62.1	63.5	62.8
		Former Sgls	55.3	38.8	33.8	48.3	38.7	39.1	42.6	42.0	42.3
21	Existing Lock	Existing Lock	115.0	107.5	100.5	97.0	99.5	87.2	107.7	94.6	101.1
	2R	Former Dbs	68.8	65.3	58.0	52.7	59.2	48.6	64.0	53.5	58.8
		Former Sgls	56.8	37.7	43.8	51.0	35.1	41.0	46.1	42.4	44.2
	3R	Former Dbs	61.8	57.3	46.8	56.0	58.2	50.6	55.3	54.9	55.1
		Former Sgls	38.5	36.7	32.9	34.8	34.1	36.7	36.0	35.2	35.6
20	Existing Lock	Existing Lock	119.9	112.9	105.6	110.0	104.6	90.9	112.8	101.8	107.3
	2R	Former Dbs	72.1	65.1	61.0	59.4	57.9	49.1	66.1	55.5	60.8
		Former Sgls	51.6	39.9	39.8	43.0	37.5	38.6	43.8	39.7	41.7
	3R	Former Dbs	60.1	57.9	46.8	58.4	56.9	47.1	54.9	54.1	54.5
		Former Sgls	47.3	38.6	32.6	42.0	36.5	36.6	39.5	38.4	38.9
18	Existing Lock	Existing Lock	117.9	107.7	105.4	93.6	98.9	87.8	110.3	93.4	101.9
	2R	Former Dbs	71.7	61.5	63.0	48.4	53.7	48.5	65.4	50.2	57.8
		Former Sgls	41.9	38.3	41.4	37.8	35.7	39.0	40.5	37.5	39.0
17	Existing Lock	Existing Lock	130.4	125.4	111.5	100.7	99.0	87.3	122.4	95.7	109.1
	2R	Former Dbs	82.0	77.0	65.8	52.2	53.4	45.7	74.9	50.4	62.7
		Former Sgls	47.3	40.1	39.5	40.0	38.7	37.3	42.3	38.7	40.5
16	Existing Lock	Existing Lock	120.8	109.1	101.8	102.4	95.2	87.4	110.6	95.0	102.8
	2R	Former Dbs	74.3	62.6	59.0	54.2	48.5	46.4	65.3	49.7	57.5
		Former Sgls	43.6	34.6	39.8	41.2	32.4	39.3	39.3	37.6	38.5
15	Existing Lock	Existing Lock	118.3	130.3	106.4	103.8	121.4	97.2	118.3	107.5	112.9
	2R	Former Dbs	65.7	76.2	64.6	51.2	70.5	55.3	68.8	59.0	63.9
		Former Sgls	40.1	51.3	47.7	35.9	45.8	47.4	46.4	43.0	44.7
14	Existing Lock	Existing Lock	115.2	116.3	102.6	100.4	106.2	95.2	111.4	100.6	106.0
	2R	Former Dbs	66.6	68.6	61.8	53.2	59.0	55.5	65.7	55.9	60.8
		Former Sgls	41.3	41.8	42.9	35.5	36.7	41.8	42.0	38.0	40.0
13	Existing Lock	Existing Lock	100.2	101.5	100.8	90.0	91.9	85.0	100.8	89.0	94.9
	Loc 2	2B	52.8	54.1	55.8	42.6	44.5	42.5	54.2	43.2	48.7
		2R	54.8	56.1	59.8	44.6	46.5	46.5	56.9	45.9	51.4
	Loc 3	3C	52.8	54.1	47.0	42.6	44.5	42.5	51.3	43.2	47.3
	Loc 4	4B	52.4	53.7	46.7	42.7	44.6	42.2	50.9	43.2	47.1
		4C	52.4	53.7	46.7	42.7	44.6	42.2	50.9	43.2	47.1
12	Existing Lock	Existing Lock	105.3	109.2	105.8	91.7	91.6	85.5	106.8	89.6	98.2
	Loc 2	2B	56.3	60.2	58.3	43.9	44.8	42.1	58.3	43.6	50.9
		2R	58.3	62.2	62.3	45.9	46.8	46.1	60.9	46.3	53.6
	Loc 3	3C	50.3	54.8	45.6	43.9	44.8	39.9	50.2	42.9	46.6
	Loc 4	4B	50.3	54.8	45.5	43.8	44.7	39.8	50.2	42.8	46.5
		4C	50.3	54.8	45.5	43.8	44.7	39.8	50.2	42.8	46.5
11	Existing Lock	Existing Lock	117.7	105.1	102.2	105.3	96.8	95.7	108.4	99.2	103.8
	Loc 2	2B	65.5	52.9	52.7	51.5	43.0	47.2	57.0	47.2	52.1
		2R	67.5	54.9	56.7	53.5	45.0	51.2	59.7	49.9	54.8
	Loc 3	3C	56.5	47.8	47.8	51.5	43.0	45.4	50.7	46.6	48.7

* Includes turnback approaches and time to turnback the chamber.
* Approach savings are only shown upbound for 14-18, 20, 25, and downbound for Peoria, LaGrange, Locks 14,15, and 25.
PREFORM3-turnbackappr work with this one 6 9 2000

Performance Comparison of Without-Project versus with 1200' Locks

DOWNBOUND LOCKAGE STEPS WITH FLY APPROACH AND EXIT

Lock Site	Lock Alternative	1 Approach (Fly)	4 Chamber Entry	5 Uncoup-ling (and backing 2nd cut out of chamber)	6 Gate Operation	7 Emptying the Chamber	8 Gate Operation	9 Extract First Cut	10 Gate Operation	11 Filling the Chamber	12 Gate Operation	13 2nd cut entry	14 Gate Operation	15 Emptying the Chamber	16 Gate Operation	17 Tow Remake	18 Exit (Fly)	21 Gate Operation	22 Filling the Chamber	23 Gate Operation	24 Total Lockage Time (min.) Fly	27 Standard Deviation	28 Time Savings on Doubles (Fly)	31	32 Standard Deviation (from Approach only)	33 Standard Deviation (from Extracting 1st cut only)	34 Standard Deviation (from Remake only)
L.G.	Existing Lock	20	10.2	6	2	3.2	2	15.6	2	3.0	2	8	2	3.2	2	14	11.4	N/A	N/A	N/A	106.6	13.1			11	6.2	3.5
	Loc 1	14	13.6	N/A	N/A	N/A	N/A	N/A	N/A	N/A	N/A	N/A	2	10.3	2	N/A	14.8	N/A	N/A	N/A	56.7	8	49.9		8	0	
	Former Singles	7	6.8	N/A	N/A	N/A	N/A	N/A	N/A	N/A	N/A	N/A	2	10.3	2	N/A	4.0	N/A	N/A	N/A	32.3						
	Loc 2	20	13.6	N/A	N/A	N/A	N/A	N/A	N/A	N/A	N/A	N/A	2	9.4	2	N/A	14.8	N/A	N/A	N/A	61.8	8	44.8		8	0	
	Former Singles	10	6.8	N/A	N/A	N/A	N/A	N/A	N/A	N/A	N/A	N/A	2	10.3	2	N/A	4.0	N/A	N/A	N/A	35.4						
Peo.	Existing Lock	19	11.6	6	2	4.4	2	14.5	2	4.0	2	8	2	4.4	2	14	13.8	N/A	N/A	N/A	111.7	12.0			10	5.7	3.5
	Loc 1	16	15	N/A	N/A	N/A	N/A	N/A	N/A	N/A	N/A	N/A	2	11.7	2	N/A	17.2	N/A	N/A	N/A	63.9	9	47.8		9	0	
	Former Singles	7	6.8	N/A	N/A	N/A	N/A	N/A	N/A	N/A	N/A	N/A	2	11.7	2	N/A	5.3	N/A	N/A	N/A	35.0						
	Loc 2	19	15	N/A	N/A	N/A	N/A	N/A	N/A	N/A	N/A	N/A	2	10.4	2	N/A	17.2	N/A	N/A	N/A	65.6	9	46.1		9	0	
	Former Singles	9	6.8	N/A	N/A	N/A	N/A	N/A	N/A	N/A	N/A	N/A	2	11.7	2	N/A	5.3	N/A	N/A	N/A	36.4						
25	Existing Lock	24	7.4	6	2	4.9	2	18.1	2	5.0	2	8	2	6.0	2	14	8.3	N/A	N/A	N/A	113.7	14.4			13	5.0	3.5
	Loc 1	16	10.8	N/A	N/A	N/A	N/A	N/A	N/A	N/A	N/A	N/A	2	14.2	2	N/A	11.7	N/A	N/A	N/A	56.7	8	57.0		8	0	
	Loc 2	22	10.8	N/A	N/A	N/A	N/A	N/A	N/A	N/A	N/A	N/A	2	12.9	2	N/A	11.7	N/A	N/A	N/A	61.4	8	52.3		8	0	
	Former Singles	10	6.8	N/A	N/A	N/A	N/A	N/A	N/A	N/A	N/A	N/A	2	12.9	2	N/A	4	N/A	N/A	N/A	37.2						
	Loc 3	16	10.8	N/A	N/A	N/A	N/A	N/A	N/A	N/A	N/A	N/A	2	10.9	2	N/A	11.7	N/A	N/A	N/A	53.4	8	60.3		8	0	
	Loc 3R	16	10.8	N/A	N/A	N/A	N/A	N/A	N/A	N/A	N/A	N/A	1.5	12.9	1.5	N/A	11.7	N/A	N/A	N/A	54.4	8	59.3		8	0	
	Former Singles	10	6.8	N/A	N/A	N/A	N/A	N/A	N/A	N/A	N/A	N/A	1.5	12.9	1.5	N/A	4	N/A	N/A	N/A	36.7				8	0	
	Loc 4	16	10.8	N/A	N/A	N/A	N/A	N/A	N/A	N/A	N/A	N/A	2	10.3	2	N/A	11.7	N/A	N/A	N/A	52.8	8	60.9		8	0	
	Some savings in upbound approach due to channel improvement																										
24	Existing Lock	22	8.2	6	2	5.0	2	20.4	2	6.2	2	8	2	6.6	2	14	9.8	N/A	N/A	N/A	118.2	13.2			12	4.1	3.5
	Loc 2	22	11.6	N/A	N/A	N/A	N/A	N/A	N/A	N/A	N/A	N/A	2	12.6	2	N/A	13.2	N/A	N/A	N/A	63.4	8	54.8		8	0	
	Former Singles	12	6.8	N/A	N/A	N/A	N/A	N/A	N/A	N/A	N/A	N/A	2	12.6	2	N/A	5.4	N/A	N/A	N/A	41.2						
	Loc 3	15	11.6	N/A	N/A	N/A	N/A	N/A	N/A	N/A	N/A	N/A	2	12.5	2	N/A	13.2	N/A	N/A	N/A	56.3	8	61.9		8	0	
	Loc 3R	15	15	N/A	N/A	N/A	N/A	N/A	N/A	N/A	N/A	N/A	1.5	12.6	1.5	N/A	13.2	N/A	N/A	N/A	58.8	8	59.4		8	0	
	Former Singles	12	6.8	N/A	N/A	N/A	N/A	N/A	N/A	N/A	N/A	N/A	1.5	12.6	1.5	N/A	5.4	N/A	N/A	N/A	39.8						
	Loc 4	15	11.6	N/A	N/A	N/A	N/A	N/A	N/A	N/A	N/A	N/A	2	9.8	2	N/A	13.2	N/A	N/A	N/A	53.6	8	64.6		8	0	
22	Existing Lock	50	9.1	6	2	2.8	2	18.4	2	3.0	2	8	2	3.3	2	14	15.9	N/A	N/A	N/A	142.5	18.5			16	8.5	3.5
	Loc 2	50	12.5	N/A	N/A	N/A	N/A	N/A	N/A	N/A	N/A	N/A	2	9.3	2	N/A	19.3	N/A	N/A	N/A	95.1	10	47.4		10	0	
	Former Singles	28	6.8	N/A	N/A	N/A	N/A	N/A	N/A	N/A	N/A	N/A	2	9.3	2	N/A	8.5	N/A	N/A	N/A	56.3						
	Loc 3	32	12.5	N/A	N/A	N/A	N/A	N/A	N/A	N/A	N/A	N/A	2	11.3	2	N/A	19.3	N/A	N/A	N/A	79.1	10	63.4		10	0	
	Loc 3R	32	12.5	N/A	N/A	N/A	N/A	N/A	N/A	N/A	N/A	N/A	1.5	9.3	1.5	N/A	19.3	N/A	N/A	N/A	76.1	10	66.4		10	0	
	Former Singles	28	6.8	N/A	N/A	N/A	N/A	N/A	N/A	N/A	N/A	N/A	1.5	9.3	1.5	N/A	8.5	N/A	N/A	N/A	55.3						
	Loc 4	32	12.5	N/A	N/A	N/A	N/A	N/A	N/A	N/A	N/A	N/A	2	9.4	2	N/A	19.3	N/A	N/A	N/A	77.2	10	65.3		10	0	
21	Existing Lock	33	8.0	6	2	2.3	2	16.8	2	2.2	2	8	2	2.4	2	14	10.3	N/A	N/A	N/A	115.0	15.2			14	4.8	3.5
	Loc 2	33	11.4	N/A	N/A	N/A	N/A	N/A	N/A	N/A	N/A	N/A	2	10.7	2	N/A	13.7	N/A	N/A	N/A	72.8	10	42.2		10	0	
	Former Singles	14	6.8	N/A	N/A	N/A	N/A	N/A	N/A	N/A	N/A	N/A	2	10.7	2	N/A	4	N/A	N/A	N/A	39.5						
	Loc 3	23	11.4	N/A	N/A	N/A	N/A	N/A	N/A	N/A	N/A	N/A	2	8.7	2	N/A	13.7	N/A	N/A	N/A	60.8	10	54.2		10	0	
	Loc 3R	23	11.4	N/A	N/A	N/A	N/A	N/A	N/A	N/A	N/A	N/A	1.5	10.7	1.5	N/A	13.7	N/A	N/A	N/A	61.8	10	53.2		10	0	
	Former Singles	14	6.8	N/A	N/A	N/A	N/A	N/A	N/A	N/A	N/A	N/A	1.5	10.7	1.5	N/A	4	N/A	N/A	N/A	38.5						
	Loc 4	23	11.4	N/A	N/A	N/A	N/A	N/A	N/A	N/A	N/A	N/A	2	8.7	2	N/A	13.7	N/A	N/A	N/A	60.8	10	54.2		10	0	
20	Existing Lock	32	8.6	6	2	3.7	2	16.9	2	3.8	2	8	2	4.1	2	14	10.8	N/A	N/A	N/A	119.9	16.2			15	5.1	3.5
	Loc 2	32	12	N/A	N/A	N/A	N/A	N/A	N/A	N/A	N/A	N/A	2	9.9	2	N/A	14.2	N/A	N/A	N/A	72.1	10	47.8		10	0	
	Former Singles	24	6.8	N/A	N/A	N/A	N/A	N/A	N/A	N/A	N/A	N/A	2	9.9	2	N/A	6.6	N/A	N/A	N/A	51.6						
	Loc 3	21	12	N/A	N/A	N/A	N/A	N/A	N/A	N/A	N/A	N/A	2	9.3	2	N/A	14.2	N/A	N/A	N/A	60.5	10	59.4		10	0	
	Loc 3R	21	12	N/A	N/A	N/A	N/A	N/A	N/A	N/A	N/A	N/A	1.5	9.9	1.5	N/A	14.2	N/A	N/A	N/A	60.1	10	59.8		10	0	
	Former Singles	21	6.8	N/A	N/A	N/A	N/A	N/A	N/A	N/A	N/A	N/A	1.5	9.9	1.5	N/A	6.6	N/A	N/A	N/A	47.3						
	Loc 4	21	12	N/A	N/A	N/A	N/A	N/A	N/A	N/A	N/A	N/A	2	8.0	2	N/A	14.2	N/A	N/A	N/A	59.2	10	60.7		10	0	
19	Existing Lock	18	10.9	N/A	N/A	N/A	N/A	N/A	N/A	N/A	N/A	N/A	2	10.9	2	N/A	13.4	N/A	N/A	N/A	57.2	14			14	0	
	Loc 3	15	10.9	N/A	N/A	N/A	N/A	N/A	N/A	N/A	N/A	N/A	2	23.6	2	N/A	13.4	N/A	N/A	N/A	66.9	12	-9.7		12	0	
18	Existing Lock	32	8.0	6	2	3.3	2	17.4	2	3.6	2	8	2	3.6	2	14	10.0	N/A	N/A	N/A	117.9	15.0			14	4.2	3.5
	Loc 2	32	11.4	N/A	N/A	N/A	N/A	N/A	N/A	N/A	N/A	N/A	2	10.9	2	N/A	13.4	N/A	N/A	N/A	71.7	12	46.2		12	0	
	Former Singles	14	6.8	N/A	N/A	N/A	N/A	N/A	N/A	N/A	N/A	N/A	2	10.9	2	N/A	5.8	N/A	N/A	N/A	41.9						
	Loc 3	28	11.4	N/A	N/A	N/A	N/A	N/A	N/A	N/A	N/A	N/A	2	8.9	2	N/A	13.4	N/A	N/A	N/A	65.7	12	52.2		12	0	
	Loc 4	22	11.4	N/A	N/A	N/A	N/A	N/A	N/A	N/A	N/A	N/A	2	8.8	2	N/A	13.4	N/A	N/A	N/A	59.6	10	58.3		10	0	
17	Existing Lock	40	8.9	6	2	2.8	2	19.5	2	3.1	2	8	2	2.8	2	14	13.3	N/A	N/A	N/A	130.4	16.1			15	4.7	3.5
	Loc 1	27	12.3	N/A	N/A	N/A	N/A	N/A	N/A	N/A	N/A	N/A	2	9.9	2	N/A	16.7	N/A	N/A	N/A	69.9	10	60.5		10	0	
	Loc 2	40	12.3	N/A	N/A	N/A	N/A	N/A	N/A	N/A	N/A	N/A	2	9.0	2	N/A	16.7	N/A	N/A	N/A	82.0	10	48.4		10	0	
	Former Singles	20	6.8	N/A	N/A	N/A	N/A	N/A	N/A	N/A	N/A	N/A	2	9.0	2	N/A	7.3	N/A	N/A	N/A	47.3						
	Loc 3	27	12.3	N/A	N/A	N/A	N/A	N/A	N/A	N/A	N/A	N/A	2	7.0	2	N/A	16.7	N/A	N/A	N/A	67.0	10	63.4		10	0	
	Loc 4	27	12.3	N/A	N/A	N/A	N/A	N/A	N/A	N/A	N/A	N/A	2	7.4	2	N/A	16.7	N/A	N/A	N/A	67.4	10	63.0		10	0	
16	Existing Lock	32	8.3	6	2	3.8	2	16.0	2	4.0	2	8	2	4.2	2	14	12.5	N/A	N/A	N/A	120.8	16.2			15	5.1	3.5
	Loc 2	32	11.7	N/A	N/A	N/A	N/A	N/A	N/A	N/A	N/A	N/A	2	10.7	2	N/A	15.9	N/A	N/A	N/A	74.3	10	46.5		10	0	
	Former Singles	14	6.8	N/A	N/A	N/A	N/A	N/A	N/A	N/A	N/A	N/A	2	10.7	2	N/A	8.2	N/A	N/A	N/A	43.6						
	Loc 3	21	11.7	N/A	N/A	N/A	N/A	N/A	N/A	N/A	N/A	N/A	2	8.7	2	N/A	15.9	N/A	N/A	N/A	61.3	10	59.5		10	0	
	Loc 4	21	11.7	N/A	N/A	N/A	N/A	N/A	N/A	N/A	N/A	N/A	2	8.6	2	N/A	15.9	N/A	N/A	N/A	61.2	10	59.6		10	0	
15	Existing Lock	24	8.3	6	2	5.7	2	12.9	2	5.7	2	8	2	8.1	2	14	13.6	N/A	N/A	N/A	118.3	15.6			15	2.6	3.5
	Loc 2	19	11.7	N/A	N/A	N/A	N/A	N/A	N/A	N/A	N/A	N/A	2	14.0	2	N/A	17	N/A	N/A	N/A	65.7	10	52.6		10	0	
	Former Singles	9	6.8	N/A	N/A	N/A	N/A	N/A	N/A	N/A	N/A	N/A	2	14.0	2	N/A	6.7	N/A	N/A	N/A	40.1						
	Loc 3	16	11.7	N/A	N/A	N/A	N/A	N/A	N/A	N/A	N/A	N/A	2	14.2	2	N/A	17	N/A	N/A	N/A	62.9	10	55.4		10	0	
	Some savings in upbound approach due to channel improvement																										
14	Existing Lock	24	8.7	6	2	4.6	2	15.1	2	4.5	2	8	2	4.7	2	14	13.6	N/A	N/A	N/A	115.2	13.2			12	4.1	3.5
	Loc 2	21	12.1	N/A	N/A	N/A	N/A	N/A	N/A	N/A	N/A	N/A	2	12.5	2	N/A	17	N/A	N/A	N/A	66.6	10	48.6		10	0	
	Former Singles	12	6.8	N/A	N/A	N/A	N/A	N/A	N/A	N/A	N/A	N/A	2	12.5	2	N/A	6.2	N/A	N/A	N/A	41.3						
	Loc 4	19	12.1	N/A	N/A	N/A	N/A	N/A	N/A	N/A	N/A	N/A	2	10.7	2	N/A	17	N/A	N/A	N/A	62.8	10	52.4		10	0	
	Some savings in upbound approach due to channel improvement																										
13	Existing Lock	18	6.8	6	2	4.1	2	15.6	2	4.2	2	8	2	4.2	2	14	7.3	N/A	N/A	N/A	100.2	9.7			8	4.3	3.5
	Loc 2	18	10.2	N/A	N/A	N/A	N/A	N/A	N/A	N/A	N/A	N/A	2	11.9	2	N/A	10.7	N/A	N/A	N/A	54.8	8	45.4		8	0	
	Loc 3	18	10.2	N/A	N/A	N/A	N/A	N/A	N/A	N/A	N/A	N/A	2	9.9	2	N/A	10.7	N/A	N/A	N/A	52.8	8	47.4		8	0	
	Loc 4	18	10.2	N/A	N/A	N/A	N/A	N/A	N/A	N/A	N/A	N/A	2	9.5	2	N/A	10.7	N/A	N/A	N/A	52.4	8	47.8		8	0	
12	Existing Lock	20	7.8	6	2	4.1	2	16	2	3.9	2	8	2	4.2	2	14	9.3	N/A	N/A	N/A	105.3	11.2			10	3.7	3.5
	Loc 2	20	11.2	N/A	N/A	N/A	N/A	N/A	N/A	N/A	N/A	N/A	2	10.4	2	N/A	12.7	N/A	N/A	N/A	58.3	7	47.0		7	0	
	Loc 3	14	11.2	N/A	N/A	N/A	N/A	N/A	N/A	N/A	N/A	N/A	2	8.4	2	N/A	12.7	N/A	N/A	N/A	50.3	7	55.0		7	0	
	Loc 4	14	11.2	N/A	N/A	N/A	N/A	N/A	N/A	N/A	N/A	N/A	2	8.4	2	N/A	12.7	N/A	N/A	N/A	50.3	7	55.0		7	0	
11	Existing Lock	28	8.1	6	2	5.3	2	17.5	2	5.1	2	8	2	5.4	2	14	8.3	N/A	N/A	N/A	117.7	13.3			12	4.5	3.5
	Loc 2	28	11.5	N/A	N/A	N/A	N/A	N/A	N/A	N/A	N/A	N/A	2	12.3	2	N/A	11.7	N/A	N/A	N/A	67.5	8	50.2		8	0	
	Loc 3	19	11.5	N/A	N/A	N/A	N/A	N/A	N/A	N/A	N/A	N/A	2	10.3	2	N/A	11.7	N/A	N/A	N/A	56.5	8	61.2		8	0	
																					Average Time Difference (Min.) =		53.3				

Notes:

Columns 4 and 5 are reported in LPMS data for existing locks as a single value called "Chamber Entry". The values shown here for Chamber Entry are those from LPMS minus the estimated time of 6 min. for uncoupling which is included as Column 5.

Columns 6, 7, and 8 are reported in LPMS data for existing locks as a single value called "Chambering Time". The sum of the steps reported here equals those chambering times.

Columns 17 and 18 are reported in LPMS data for existing locks as a single value called "Exit - Fly, Exch, or Trnbk". The values shown here for Exit are those from LPMS minus the estimated time of 14 min. for recoupling which is included as Column 17.

For many of the steps the standard deviations were not known. Therefore the overall standard deviations (Column 27) is under-represented, especially for the Existing Locks (which have more steps).

Some of the items were not specifically studied. This was generally because there's no good way of estimating the time changes and because refining those steps would make little difference in the total lockage time.

Chamber Entry times (Column 4) and Exit times(Column 18) where estimated by using the entry/exit of a double plus 3.4 minutes. The 3.4 minutes is the additional time required to move the extra 600 feet of tow (moving 2mph) over the sill.

Performance Comparison of Without-Project versus with 1200' Locks

DOWNBOUND LOCKAGE STEPS WITH EXCHANGE APPROACH AND EXIT

		2	4	5	6	7	8	9	10	11	12	13	14	15	16	17	19	21	22	23	25	27	29	31	32	33	34
Lock Site	Lock Alternative	Approach (Exchange)	Chamber Entry	Uncoup-ling (and backing 2nd cut out of chamber)	Gate Operation	Emptying the Chamber	Gate Operation	Extract First Cut	Gate Operation	Filling the Chamber	Gate Operation	2nd cut entry	Gate Operation	Emptying the Chamber	Gate Operation	Tow Remake	Exit (Exchange)	Gate Operation	Filling the Chamber	Gate Operation	Total Lockage Time (min.) Exchange	Standard Deviation	Time Savings on Doubles (Exchange)		Standard Deviation (from Approach only)	Standard Deviation (from Extracting 1st cut only)	Standard Deviation (from Remake only)
L.G.	Existing Lock	23	10.2	6	2	3.2	2	15.6	2	3.0	2	8	2	3.2	2	14	23.7	N/A	N/A	N/A	121.9	13.1			11	6.2	3.5
	Loc 1	16	13.6	N/A	N/A	N/A	N/A	N/A	N/A	N/A	N/A	N/A	2	10.3	2	N/A	27.1	N/A	N/A	N/A	71.1	8	50.8		8	0	
	Former Singles	9	6.8	N/A	N/A	N/A	N/A	N/A	N/A	N/A	N/A	N/A	2	10.3	2	N/A	11.1	N/A	N/A	N/A	40.9						
	Loc 2	23	13.6	N/A	N/A	N/A	N/A	N/A	N/A	N/A	N/A	N/A	2	9.4	2	N/A	27.1	N/A	N/A	N/A	77.1	8	44.8		8	0	
Some	Former Singles	12	6.8	N/A	N/A	N/A	N/A	N/A	N/A	N/A	N/A	N/A	2	10.3	2	N/A	11.1	N/A	N/A	N/A	44.6						
Peo.	Existing Lock	19	11.6	6	2	4.4	2	14.5	2	4.0	2	8	2	4.4	2	14	21.1	N/A	N/A	N/A	119.0	12.0			10	5.7	3.5
	Loc 1	16	15	N/A	N/A	N/A	N/A	N/A	N/A	N/A	N/A	N/A	2	11.7	2	N/A	24.5	N/A	N/A	N/A	71.2	9	47.8		9	0	
	Former Singles	9	6.8	N/A	N/A	N/A	N/A	N/A	N/A	N/A	N/A	N/A	2	11.7	2	N/A	9.4	N/A	N/A	N/A	40.7						
	Loc 2	19	15	N/A	N/A	N/A	N/A	N/A	N/A	N/A	N/A	N/A	2	10.4	2	N/A	24.5	N/A	N/A	N/A	72.9	9	46.1		9	0	
Some	Former Singles	10	6.8	N/A	N/A	N/A	N/A	N/A	N/A	N/A	N/A	N/A	2	11.7	2	N/A	9.4	N/A	N/A	N/A	42.3						
25	Existing Lock	19	7.4	6	2	4.9	2	18.1	2	5.0	2	8	2	6.0	2	14	11.3	N/A	N/A	N/A	111.7	14.4			13	5.0	3.5
	Loc 1	13	10.8	N/A	N/A	N/A	N/A	N/A	N/A	N/A	N/A	N/A	2	14.2	2	N/A	14.7	N/A	N/A	N/A	56.4	8	55.3		8	0	
	Loc 2	17	10.8	N/A	N/A	N/A	N/A	N/A	N/A	N/A	N/A	N/A	2	12.9	2	N/A	14.7	N/A	N/A	N/A	59.8	8	51.9		8	0	
	Former Singles	10	6.8	N/A	N/A	N/A	N/A	N/A	N/A	N/A	N/A	N/A	2	12.9	2	N/A	4.5	N/A	N/A	N/A	37.7						
	Loc 3	13	10.8	N/A	N/A	N/A	N/A	N/A	N/A	N/A	N/A	N/A	2	10.9	2	N/A	14.7	N/A	N/A	N/A	53.1	8	58.6		8	0	
	Loc 3R	13	10.8	N/A	N/A	N/A	N/A	N/A	N/A	N/A	N/A	N/A	1.5	10.9	1.5	N/A	14.7	N/A	N/A	N/A	52.1	8	59.6		8	0	
	Former Singles	13	6.8	N/A	N/A	N/A	N/A	N/A	N/A	N/A	N/A	N/A	1.5	10.9	1.5	N/A	4.5	N/A	N/A	N/A	37.9						
	Loc 4	13	10.8	N/A	N/A	N/A	N/A	N/A	N/A	N/A	N/A	N/A	2	10.3	2	N/A	14.7	N/A	N/A	N/A	52.5	8	59.2		8	0	
	Some savings in upbound approach due to channel improvement																										
24	Existing Lock	23	8.2	6	2	5.0	2	20.4	2	6.2	2	8	2	6.6	2	14	13.2	N/A	N/A	N/A	122.6	13.2			12	4.1	3.5
	Loc 2	23	11.6	N/A	N/A	N/A	N/A	N/A	N/A	N/A	N/A	N/A	2	12.6	2	N/A	16.6	N/A	N/A	N/A	67.8	8	54.8		8	0	
	Former Singles	8	6.8	N/A	N/A	N/A	N/A	N/A	N/A	N/A	N/A	N/A	2	12.6	2	N/A	8.3	N/A	N/A	N/A	39.9						
	Loc 3	16	11.6	N/A	N/A	N/A	N/A	N/A	N/A	N/A	N/A	N/A	2	12.5	2	N/A	16.6	N/A	N/A	N/A	60.4	8	62.2		8	0	
	Loc 3R	16	11.6	N/A	N/A	N/A	N/A	N/A	N/A	N/A	N/A	N/A	1.5	12.6	1.5	N/A	16.6	N/A	N/A	N/A	59.5	8	63.1		8	0	
	Former Singles	8	6.8	N/A	N/A	N/A	N/A	N/A	N/A	N/A	N/A	N/A	1.5	12.6	1.5	N/A	8.3	N/A	N/A	N/A	38.7						
	Loc 4	16	11.6	N/A	N/A	N/A	N/A	N/A	N/A	N/A	N/A	N/A	2	9.8	2	N/A	16.6	N/A	N/A	N/A	57.7	8	64.9		8	0	
22	Existing Lock	28	9.1	6	2	2.8	2	18.4	2	3.0	2	8	2	3.3	2	14	16.8	N/A	N/A	N/A	121.4	18.5			16	8.5	3.5
	Loc 2	28	12.5	N/A	N/A	N/A	N/A	N/A	N/A	N/A	N/A	N/A	2	9.3	2	N/A	20.2	N/A	N/A	N/A	74.0	10	47.4		10	0	
	Former Singles	10	6.8	N/A	N/A	N/A	N/A	N/A	N/A	N/A	N/A	N/A	2	9.3	2	N/A	9.7	N/A	N/A	N/A	39.5						
	Loc 3	18	12.5	N/A	N/A	N/A	N/A	N/A	N/A	N/A	N/A	N/A	2	11.3	2	N/A	20.2	N/A	N/A	N/A	65.9	10	55.5		10	0	
	Loc 3R	18	12.5	N/A	N/A	N/A	N/A	N/A	N/A	N/A	N/A	N/A	1.5	9.3	1.5	N/A	20.2	N/A	N/A	N/A	62.9	10	58.5		10	0	
	Former Singles	10	6.8	N/A	N/A	N/A	N/A	N/A	N/A	N/A	N/A	N/A	1.5	9.3	1.5	N/A	9.7	N/A	N/A	N/A	38.8						
	Loc 4	18	12.5	N/A	N/A	N/A	N/A	N/A	N/A	N/A	N/A	N/A	2	9.4	2	N/A	20.2	N/A	N/A	N/A	64.0	10	57.4		10	0	
21	Existing Lock	23	8.0	6	2	2.3	2	16.8	2	2.2	2	8	2	2.4	2	14	12.8	N/A	N/A	N/A	107.5	15.2			14	4.8	3.5
	Loc 2	23	11.4	N/A	N/A	N/A	N/A	N/A	N/A	N/A	N/A	N/A	2	10.7	2	N/A	16.2	N/A	N/A	N/A	65.3	10	42.2		10	0	
	Former Singles	10	6.8	N/A	N/A	N/A	N/A	N/A	N/A	N/A	N/A	N/A	2	10.7	2	N/A	6.2	N/A	N/A	N/A	37.7						
	Loc 3	16	11.4	N/A	N/A	N/A	N/A	N/A	N/A	N/A	N/A	N/A	2	8.7	2	N/A	16.2	N/A	N/A	N/A	56.3	10	51.2		10	0	
	Loc 3R	16	11.4	N/A	N/A	N/A	N/A	N/A	N/A	N/A	N/A	N/A	1.5	10.7	1.5	N/A	16.2	N/A	N/A	N/A	57.3	10	50.2		10	0	
	Former Singles	10	6.8	N/A	N/A	N/A	N/A	N/A	N/A	N/A	N/A	N/A	1.5	10.7	1.5	N/A	6.2	N/A	N/A	N/A	36.7						
	Loc 4	16	11.4	N/A	N/A	N/A	N/A	N/A	N/A	N/A	N/A	N/A	2	8.7	2	N/A	16.2	N/A	N/A	N/A	56.3	10	51.2		10	0	
20	Existing Lock	18	8.6	6	2	3.7	2	16.9	2	3.8	2	8	2	4.1	2	14	17.8	N/A	N/A	N/A	112.9	16.2			15	5.1	3.5
	Loc 2	18	12	N/A	N/A	N/A	N/A	N/A	N/A	N/A	N/A	N/A	2	9.9	2	N/A	21.2	N/A	N/A	N/A	65.1	10	47.8		10	0	
	Former Singles	10	6.8	N/A	N/A	N/A	N/A	N/A	N/A	N/A	N/A	N/A	2	9.9	2	N/A	8.9	N/A	N/A	N/A	39.9						
	Loc 3	12	12	N/A	N/A	N/A	N/A	N/A	N/A	N/A	N/A	N/A	2	9.3	2	N/A	21.2	N/A	N/A	N/A	58.3	10	54.6		10	0	
	Loc 3R	12	12	N/A	N/A	N/A	N/A	N/A	N/A	N/A	N/A	N/A	1.5	9.9	1.5	N/A	21.2	N/A	N/A	N/A	57.9	10	55.0		10	0	
	Former Singles	10	6.8	N/A	N/A	N/A	N/A	N/A	N/A	N/A	N/A	N/A	1.5	9.9	1.5	N/A	8.9	N/A	N/A	N/A	38.6						
	Loc 4	12	12	N/A	N/A	N/A	N/A	N/A	N/A	N/A	N/A	N/A	2	8.0	2	N/A	21.2	N/A	N/A	N/A	57.0	10	55.9		10	0	
19	Existing Lock	25	10.9	N/A	N/A	N/A	N/A	N/A	N/A	N/A	N/A	N/A	2	10.9	2	N/A	15.6	N/A	N/A	N/A	66.4	14			14	0	
	Loc 3	25	10.9	N/A	N/A	N/A	N/A	N/A	N/A	N/A	N/A	N/A	2	23.6	2	N/A	15.6	N/A	N/A	N/A	79.1	12	-12.7		12	0	
18	Existing Lock	21	8.0	6	2	3.3	2	17.4	2	3.6	2	8	2	3.6	2	14	10.8	N/A	N/A	N/A	107.7	15.0			14	4.2	3.5
	Loc 2	21	11.4	N/A	N/A	N/A	N/A	N/A	N/A	N/A	N/A	N/A	2	10.9	2	N/A	14.2	N/A	N/A	N/A	61.5	12	46.2		12	0	
	Former Singles	10	6.8	N/A	N/A	N/A	N/A	N/A	N/A	N/A	N/A	N/A	2	10.9	2	N/A	6.2	N/A	N/A	N/A	38.3						
	Loc 3	18	11.4	N/A	N/A	N/A	N/A	N/A	N/A	N/A	N/A	N/A	2	8.9	2	N/A	14.2	N/A	N/A	N/A	56.9	12	50.8		12	0	
	Loc 4	14	11.4	N/A	N/A	N/A	N/A	N/A	N/A	N/A	N/A	N/A	2	8.8	2	N/A	14.2	N/A	N/A	N/A	52.8	10	54.9		10	0	
17	Existing Lock	33	8.9	6	2	2.8	2	19.5	2	3.1	2	8	2	2.8	2	14	15.3	N/A	N/A	N/A	125.4	16.1			15	4.7	3.5
	Loc 1	22	12.3	N/A	N/A	N/A	N/A	N/A	N/A	N/A	N/A	N/A	2	9.9	2	N/A	18.7	N/A	N/A	N/A	67.2	10	58.2		10	0	
	Loc 2	33	12.3	N/A	N/A	N/A	N/A	N/A	N/A	N/A	N/A	N/A	2	9.0	2	N/A	18.7	N/A	N/A	N/A	77.0	10	48.4		10	0	
	Former Singles	11	6.8	N/A	N/A	N/A	N/A	N/A	N/A	N/A	N/A	N/A	2	9.0	2	N/A	9.7	N/A	N/A	N/A	40.1						
	Loc 3	22	12.3	N/A	N/A	N/A	N/A	N/A	N/A	N/A	N/A	N/A	2	7.0	2	N/A	18.7	N/A	N/A	N/A	64.3	10	61.1		10	0	
	Loc 4	22	12.3	N/A	N/A	N/A	N/A	N/A	N/A	N/A	N/A	N/A	2	7.4	2	N/A	18.7	N/A	N/A	N/A	64.7	10	60.7		10	0	
16	Existing Lock	22	8.3	6	2	3.8	2	16.0	2	4.0	2	8	2	4.2	2	14	10.8	N/A	N/A	N/A	109.1	16.2			15	5.1	3.5
	Loc 2	22	11.7	N/A	N/A	N/A	N/A	N/A	N/A	N/A	N/A	N/A	2	10.7	2	N/A	14.2	N/A	N/A	N/A	62.6	10	46.5		10	0	
	Former Singles	7	6.8	N/A	N/A	N/A	N/A	N/A	N/A	N/A	N/A	N/A	2	10.7	2	N/A	5.8	N/A	N/A	N/A	34.6						
	Loc 3	14	11.7	N/A	N/A	N/A	N/A	N/A	N/A	N/A	N/A	N/A	2	8.7	2	N/A	14.2	N/A	N/A	N/A	53.0	10	56.1		10	0	
	Loc 4	14	11.7	N/A	N/A	N/A	N/A	N/A	N/A	N/A	N/A	N/A	2	8.6	2	N/A	14.2	N/A	N/A	N/A	52.9	10	56.2		10	0	
15	Existing Lock	31	8.3	6	2	5.7	2	12.9	2	5.7	2	8	2	8.1	2	14	18.6	N/A	N/A	N/A	130.3	15.6			15	2.6	3.5
	Loc 2	25	11.7	N/A	N/A	N/A	N/A	N/A	N/A	N/A	N/A	N/A	2	14.0	2	N/A	22	N/A	N/A	N/A	76.2	10	54.1		10	0	
	Former Singles	16	6.8	N/A	N/A	N/A	N/A	N/A	N/A	N/A	N/A	N/A	2	14.0	2	N/A	10.7	N/A	N/A	N/A	51.3						
	Loc 3	21	11.7	N/A	N/A	N/A	N/A	N/A	N/A	N/A	N/A	N/A	2	14.2	2	N/A	22	N/A	N/A	N/A	72.6	10	57.7		10	0	
	Some savings in upbound approach due to channel improvement																										
14	Existing Lock	17	8.7	6	2	4.6	2	15.1	2	4.5	2	8	2	4.7	2	14	21.7	N/A	N/A	N/A	116.3	13.2			12	4.1	3.5
	Loc 2	15	12.1	N/A	N/A	N/A	N/A	N/A	N/A	N/A	N/A	N/A	2	12.5	2	N/A	25.1	N/A	N/A	N/A	68.6	10	47.7		10	0	
	Former Singles	8	6.8	N/A	N/A	N/A	N/A	N/A	N/A	N/A	N/A	N/A	2	12.5	2	N/A	10.2	N/A	N/A	N/A	41.8						
	Loc 4	13	12.1	N/A	N/A	N/A	N/A	N/A	N/A	N/A	N/A	N/A	2	10.7	2	N/A	25.1	N/A	N/A	N/A	65.4	10	50.9		10	0	
	Some savings in upbound approach due to channel improvement																										
13	Existing Lock	16	6.8	6	2	4.1	2	15.6	2	4.2	2	8	2	4.2	2	14	10.6	N/A	N/A	N/A	101.5	9.7			8	4.3	3.5
	Loc 2	16	10.2	N/A	N/A	N/A	N/A	N/A	N/A	N/A	N/A	N/A	2	11.9	2	N/A	14	N/A	N/A	N/A	56.1	8	45.4		8	0	
	Loc 3	16	10.2	N/A	N/A	N/A	N/A	N/A	N/A	N/A	N/A	N/A	2	9.9	2	N/A	14	N/A	N/A	N/A	54.1	8	47.4		8	0	
	Loc 4	16	10.2	N/A	N/A	N/A	N/A	N/A	N/A	N/A	N/A	N/A	2	9.5	2	N/A	14	N/A	N/A	N/A	53.7	8	47.8		8	0	
12	Existing Lock	18	7.8	6	2	4.1	2	16	2	3.9	2	8	2	4.2	2	14	15.2	N/A	N/A	N/A	109.2	11.2			10	3.7	3.5
	Loc 2	18	11.2	N/A	N/A	N/A	N/A	N/A	N/A	N/A	N/A	N/A	2	10.4	2	N/A	18.6	N/A	N/A	N/A	62.2	7	47.0		7	0	
	Loc 3	13	11.2	N/A	N/A	N/A	N/A	N/A	N/A	N/A	N/A	N/A	2	8.4	2	N/A	18.6	N/A	N/A	N/A	54.8	7	54.4		7	0	
	Loc 4	13	11.2	N/A	N/A	N/A	N/A	N/A	N/A	N/A	N/A	N/A	2	8.4	2	N/A	18.6	N/A	N/A	N/A	54.8	7	54.4		7	0	
11	Existing Lock	16	8.1	6	2	5.3	2	17.5	2	5.1	2	8	2	5.4	2	14	7.7	N/A	N/A	N/A	105.1	13.3			12	4.5	3.5
	Loc 2	16	11.5	N/A	N/A	N/A	N/A	N/A	N/A	N/A	N/A	N/A	2	12.3	2	N/A	11.1	N/A	N/A	N/A	54.9	8	50.2		8	0	
	Loc 3	11	11.5	N/A	N/A	N/A	N/A	N/A	N/A	N/A	N/A	N/A	2	10.3	2	N/A	11.1	N/A	N/A	N/A	47.8	8	57.4		8	0	
																					Average Time Difference (Min.) =		51.8				

Notes:

Columns 4 and 5 are reported in LPMS data for existing locks as a single value called "Chamber Entry". The values shown here for Chamber Entry are those from LPMS minus the estimated time of 6 min. for uncoupling which is included as Column 5.

Columns 6, 7, and 8 are reported in LPMS data for existing locks as a single value called "Chambering Time". The sum of the steps reported here equals those chambering times.

Columns 17 and 18 are reported in LPMS data for existing locks as a single value called "Exit - Fly, Exch, or Trnbk". The values shown here for Exit are those from LPMS minus the estimated time of 14 min. for recoupling which is included as Column 17.

For many of the steps the standard deviations were not known. Therefore the overall standard deviations (Column 27) is under-represented, especially for the Existing Locks (which have more steps).

Some of the items were not specifically studied. This was generally because there's no good way of estimating the time changes and because refining those steps would make little difference in the total lockage time.

Chamber Entry times (Column 4) and Exit times(Column 19) where estimated by using the entry/exit of a double plus 3.4 minutes. The 3.4 minutes is the additional time required to move the extra 600 feet of tow (moving 2mph) over the sill.

Performance Comparison of Without-Project versus with 1200' Locks

DOWNBOUND LOCKAGE STEPS WITH TURNBACK APPROACH AND EXIT

		3	4	5	6	7	8	9	10	11	12	13	14	15	16	17	20	21	22	23	26	27	30	31	32	33	34
Lock Site	Lock Alternative	Approach (Turnback)	Chamber Entry	Uncoup-ling (and backing 2nd cut out of chamber)	Gate Operation	Emptying the Chamber	Gate Operation	Extract First Cut	Gate Operation	Filling the Chamber	Gate Operation	2nd cut entry	Gate Operation	Emptying the Chamber	Gate Operation	Tow Remake	Exit (Turnback)	Gate Operation	Filling the Chamber	Gate Operation	Total Lockage Time (min.) Turnback	Standard Deviation	Time Savings on Doubles (Turnback)		Standard Deviation (from Approach only)	Standard Deviation (from Extracting 1st cut only)	Standard Deviation (from Remake only)
L.G.	Existing Lock	9.0	10.2	6	2	3.2	2	15.6	2	3.0	2	8	2	3.2	2	14	12.8	2	2.0	2	103.0	13.1			11	6.2	3.5
	Loc 1	6.3	13.6	N/A	N/A	N/A	N/A	N/A	N/A	N/A	N/A	N/A	2	10.3	2	N/A	16.2	2	9.5	2	63.9	8	39.1		8	0	
	Former Singles	3.9	6.8										2	10.3	2	N/A	5.6	2	9.5	2	44.1						
	Loc 2	9.0	13.6	N/A	N/A	N/A	N/A	N/A	N/A	N/A	N/A	N/A	2	9.4	2	N/A	16.2	2	4.9	2	61.1	8	41.9		8	0	
	Former Singles	5.5	6.8										2	10.3	2	N/A	5.6	2	9.5	2	45.7						
Peo.	Existing Lock	7.7	11.6	6	2	4.4	2	14.5	2	4.0	2	8	2	4.4	2	14	13.2	2	2.0	2	105.8	12.0			10	5.7	3.5
	Loc 1	6.5	15	N/A	N/A	N/A	N/A	N/A	N/A	N/A	N/A	N/A	2	11.7	2	N/A	16.6	2	10.5	2	68.3	9	37.5		9	0	
	Former Singles	3.9	6.8										2	11.7	2	N/A	5.7	2	10.5	2	46.6						
	Loc 2	7.7	15	N/A	N/A	N/A	N/A	N/A	N/A	N/A	N/A	N/A	2	10.4	2	N/A	16.6	2	5.5	2	63.2	9	42.6		9	0	
	Former Singles	4.6	6.8										2	11.7	2	N/A	5.7	2	10.5	2	47.3						
25	Existing Lock	9.2	7.4	6	2	4.9	2	18.1	2	5.0	2	8	2	6.0	2	14	8.5	2	2.0	2	105.1	14.4			13	5.0	3.5
	Loc 1	N/A	10.8	N/A	N/A	N/A	N/A	N/A	N/A	N/A	N/A	N/A	2	14.2	2	N/A	11.9	2	13.7	2	58.6	8	46.5		8	0	
	Loc 2	9.2	10.8	N/A	N/A	N/A	N/A	N/A	N/A	N/A	N/A	N/A	2	12.9	2	N/A	11.9	2	7.0	2	59.8	8	45.3		8	0	
	Former Singles	3.5	6.8										2	12.9	2	N/A	4.3	2	7.0	2	42.5						
	Loc 3	N/A	10.8	N/A	N/A	N/A	N/A	N/A	N/A	N/A	N/A	N/A	2	10.9	2	N/A	11.9	2	8.0	2	49.6	8	55.5		8	0	
	Loc 3R	N/A	10.8	N/A	N/A	N/A	N/A	N/A	N/A	N/A	N/A	N/A	1.5	12.9	1.5	N/A	11.9	1.5	7.0	1.5	48.6	8	56.5		8	0	
	Former Singles	N/A	6.8	N/A	N/A	N/A	N/A	N/A	N/A	N/A	N/A	N/A	1.5	12.9	1.5	N/A	4.3	1.5	7.0	1.5	37.0						
	Loc 4	N/A	10.8	N/A	N/A	N/A	N/A	N/A	N/A	N/A	N/A	N/A	2	10.3	2	N/A	11.9	2	8.3	2	49.3	8	55.8		8	0	
24	Existing Lock	10.8	8.2	6	2	5.0	2	20.4	2	6.2	2	8	2	6.6	2	14	8.8	2	2.0	2	112.0	13.2			12	4.1	3.5
	Loc 2	10.8	11.6	N/A	N/A	N/A	N/A	N/A	N/A	N/A	N/A	N/A	2	12.6	2	N/A	12.2	2	6.9	2	62.1	8	49.9		8	0	
	Former Singles	4.2	6.8										2	12.6	2	N/A	6	2	6.9	2	44.5						
	Loc 3	N/A	11.6	N/A	N/A	N/A	N/A	N/A	N/A	N/A	N/A	N/A	2	12.5	2	N/A	12.2	2	8.9	2	53.2	8	58.8		8	0	
	Loc 3R	N/A	11.6	N/A	N/A	N/A	N/A	N/A	N/A	N/A	N/A	N/A	1.5	12.6	1.5	N/A	12.2	1.5	6.9	1.5	49.3	8	62.7		8	0	
	Former Singles	N/A	6.8	N/A	N/A	N/A	N/A	N/A	N/A	N/A	N/A	N/A	1.5	12.6	1.5	N/A	6	1.5	6.9	1.5	38.3						
	Loc 4	N/A	11.6	N/A	N/A	N/A	N/A	N/A	N/A	N/A	N/A	N/A	2	9.8	2	N/A	12.2	2	7.8	2	49.4	8	62.6		8	0	
22	Existing Lock	16.5	9.1	6	2	2.8	2	18.4	2	3.0	2	8	2	3.3	2	14	10	2	2.0	2	109.1	18.5			16	8.5	3.5
	Loc 2	16.5	12.5	N/A	N/A	N/A	N/A	N/A	N/A	N/A	N/A	N/A	2	9.3	2	N/A	13.4	2	6.0	2	65.7	10	43.4		10	0	
	Former Singles	5	6.8										2	9.3	2	N/A	5.7	2	6.0	2	40.8						
	Loc 3	N/A	12.5	N/A	N/A	N/A	N/A	N/A	N/A	N/A	N/A	N/A	2	11.3	2	N/A	13.4	2	7.9	2	53.1	10	56.0		10	0	
	Loc 3R	N/A	12.5	N/A	N/A	N/A	N/A	N/A	N/A	N/A	N/A	N/A	1.5	9.3	1.5	N/A	13.4	1.5	6.0	1.5	47.2	10	61.9		10	0	
	Former Singles	N/A	6.8	N/A	N/A	N/A	N/A	N/A	N/A	N/A	N/A	N/A	1.5	9.3	1.5	N/A	5.7	1.5	6.0	1.5	33.8	10			10	0	
	Loc 4	N/A	12.5	N/A	N/A	N/A	N/A	N/A	N/A	N/A	N/A	N/A	2	9.4	2	N/A	13.4	2	7.9	2	51.2	10	57.9		10	0	
21	Existing Lock	13.2	8.0	6	2	2.3	2	16.8	2	2.2	2	8	2	2.4	2	14	9.6	2	2.0	2	100.5	15.2			14	4.8	3.5
	Loc 2	13.2	11.4	N/A	N/A	N/A	N/A	N/A	N/A	N/A	N/A	N/A	2	10.7	2	N/A	13	2	5.7	2	62.0	10	38.5		10	0	
	Former Singles	4	6.8										2	10.7	2	N/A	3.7	2	5.7	2	38.9						
	Loc 3	N/A	11.4	N/A	N/A	N/A	N/A	N/A	N/A	N/A	N/A	N/A	2	8.7	2	N/A	13	2	6.7	2	47.8	10	52.7		10	0	
	Loc 3R	N/A	11.4	N/A	N/A	N/A	N/A	N/A	N/A	N/A	N/A	N/A	1.5	10.7	1.5	N/A	13	1.5	5.7	1.5	46.8	10	53.7		10	0	
	Former Singles	N/A	6.8	N/A	N/A	N/A	N/A	N/A	N/A	N/A	N/A	N/A	1.5	10.7	1.5	N/A	3.7	1.5	5.7	1.5	32.9						
	Loc 4	N/A	11.4	N/A	N/A	N/A	N/A	N/A	N/A	N/A	N/A	N/A	2	8.7	2	N/A	13	2	6.7	2	47.8	10	52.7		10	0	
20	Existing Lock	12.2	8.6	6	2	3.7	2	16.9	2	3.8	2	8	2	4.1	2	14	10.3	2	2.0	2	105.6	16.2			15	5.1	3.5
	Loc 2	12.2	12	N/A	N/A	N/A	N/A	N/A	N/A	N/A	N/A	N/A	2	9.9	2	N/A	13.7	2	5.2	2	61.0	10	44.6		10	0	
	Former Singles	5.2	6.8										2	9.9	2	N/A	4.7	2	5.2	2	39.8						
	Loc 3	N/A	12	N/A	N/A	N/A	N/A	N/A	N/A	N/A	N/A	N/A	2	9.3	2	N/A	13.7	2	6.8	2	49.8	10	55.8		10	0	
	Loc 3R	N/A	12	N/A	N/A	N/A	N/A	N/A	N/A	N/A	N/A	N/A	1.5	9.9	1.5	N/A	13.7	1.5	5.2	1.5	46.8	10	58.8		10	0	
	Former Singles	N/A	6.8	N/A	N/A	N/A	N/A	N/A	N/A	N/A	N/A	N/A	1.5	9.9	1.5	N/A	4.7	1.5	5.2	1.5	32.6						
	Loc 4	N/A	12	N/A	N/A	N/A	N/A	N/A	N/A	N/A	N/A	N/A	2	8.0	2	N/A	13.7	2	6.0	2	47.7	10	57.9		10	0	
19	Existing Lock	N/A	10.9	N/A	N/A	N/A	N/A	N/A	N/A	N/A	N/A	N/A	2	10.9	2	N/A	10.5	2	22.0	2	62.3	14			14	0	
	Loc 3	N/A	10.9	N/A	N/A	N/A	N/A	N/A	N/A	N/A	N/A	N/A	2	23.6	2	N/A	10.5	2	16.7	2	69.7	12	-7.4		12	0	
18	Existing Lock	14.5	8.0	6	2	3.3	2	17.4	2	3.6	2	8	2	3.6	2	14	9.0	2	2.0	2	105.4	15.0			14	4.2	3.5
	Loc 2	14.5	11.4	N/A	N/A	N/A	N/A	N/A	N/A	N/A	N/A	N/A	2	10.9	2	N/A	12.4	2	5.8	2	63.0	12	42.4		12	0	
	Former Singles	4.8	6.8										2	10.9	2	N/A	5.1	2	5.8	2	41.4	13					
	Loc 3	N/A	11.4	N/A	N/A	N/A	N/A	N/A	N/A	N/A	N/A	N/A	2	8.9	2	N/A	12.4	2	6.8	2	47.5	12	57.9		12	0	
	Loc 4	N/A	11.4	N/A	N/A	N/A	N/A	N/A	N/A	N/A	N/A	N/A	2	8.8	2	N/A	12.4	2	6.8	2	47.4	10	58.0		10	0	
17	Existing Lock	19.6	8.9	6	2	2.8	2	19.5	2	3.1	2	8	2	2.8	2	14	8.8	2	2.0	2	111.5	16.1			15	4.7	3.5
	Loc 1	N/A	12.3	N/A	N/A	N/A	N/A	N/A	N/A	N/A	N/A	N/A	2	9.9	2	N/A	12.2	2	8.7	2	51.1	10	60.4		10	0	
	Loc 2	19.6	12.3	N/A	N/A	N/A	N/A	N/A	N/A	N/A	N/A	N/A	2	9.0	2	N/A	12.2	2	4.7	2	65.8	10	45.7		10	0	
	Former Singles	5.1	6.8										2	9.0	2	N/A	5.9	2	4.7	2	39.5						
	Loc 3	N/A	12.3	N/A	N/A	N/A	N/A	N/A	N/A	N/A	N/A	N/A	2	7.0	2	N/A	12.2	2	5.7	2	45.2	10	66.3		10	0	
	Loc 4	N/A	12.3	N/A	N/A	N/A	N/A	N/A	N/A	N/A	N/A	N/A	2	7.4	2	N/A	12.2	2	5.4	2	45.3	10	66.2		10	0	
16	Existing Lock	11.5	8.3	6	2	3.8	2	16.0	2	4.0	2	8	2	4.2	2	14	8	2	2.0	2	101.8	16.2			15	5.1	3.5
	Loc 2	11.5	11.7	N/A	N/A	N/A	N/A	N/A	N/A	N/A	N/A	N/A	2	10.7	2	N/A	11.4	2	5.7	2	59.0	10	42.8		10	0	
	Former Singles	3.4	6.8										2	10.7	2	N/A	5.2	2	5.7	2	39.8						
	Loc 3	N/A	11.7	N/A	N/A	N/A	N/A	N/A	N/A	N/A	N/A	N/A	2	8.7	2	N/A	11.4	2	6.7	2	46.5	10	55.3		10	0	
	Loc 4	N/A	11.7	N/A	N/A	N/A	N/A	N/A	N/A	N/A	N/A	N/A	2	8.6	2	N/A	11.4	2	6.6	2	46.3	10	55.5		10	0	
15	Existing Lock	6.5	8.3	6	2	5.7	2	12.9	2	5.7	2	8	2	8.1	2	14	13.2	2	2.0	2	106.4	15.6			15	2.6	3.5
	Loc 2	6.5	11.7	N/A	N/A	N/A	N/A	N/A	N/A	N/A	N/A	N/A	2	14.0	2	N/A	16.6	2	7.8	2	64.6	10	41.8		10	0	
	Former Singles	3.5	6.8										2	14.0	2	N/A	7.6	2	7.8	2	47.7						
	Loc 3	N/A	11.7	N/A	N/A	N/A	N/A	N/A	N/A	N/A	N/A	N/A	2	14.2	2	N/A	16.6	2	10.1	2	60.6	10	45.8		10	0	
14	Existing Lock	7.9	8.7	6	2	4.6	2	15.1	2	4.5	2	8	2	4.7	2	14	11.1	2	2.0	2	102.6	13.2			12	4.1	3.5
	Loc 2	7.9	12.1	N/A	N/A	N/A	N/A	N/A	N/A	N/A	N/A	N/A	2	12.5	2	N/A	14.5	2	6.8	2	61.8	10	40.8		10	0	
	Former Singles	2.7	6.8										2	12.5	2	N/A	6.1	2	6.8	2	42.9						
	Loc 4	N/A	12.1	N/A	N/A	N/A	N/A	N/A	N/A	N/A	N/A	N/A	2	10.7	2	N/A	14.5	2	8.9	2	54.2	10	48.4		10	0	
13	Existing Lock	11.8	6.8	6	2	4.1	2	15.6	2	4.2	2	8	2	4.2	2	14	8.1	2	2.0	2	100.8	9.7			8	4.3	3.5
	Loc 2	11.8	10.2	N/A	N/A	N/A	N/A	N/A	N/A	N/A	N/A	N/A	2	11.9	2	N/A	11.5	2	6.4	2	59.8	8	41.0		8	0	
	Loc 3	N/A	10.2	N/A	N/A	N/A	N/A	N/A	N/A	N/A	N/A	N/A	2	9.9	2	N/A	11.5	2	7.4	2	47.0	8	53.8		8	0	
	Loc 4	N/A	10.2	N/A	N/A	N/A	N/A	N/A	N/A	N/A	N/A	N/A	2	9.5	2	N/A	11.5	2	7.5	2	46.7	8	54.1		8	0	
12	Existing Lock	15.7	7.8	6	2	4.1	2	16	2	3.9	2	8	2	4.2	2	14	8.1	2	2.0	2	105.8	11.2			10	3.7	3.5
	Loc 2	15.7	11.2	N/A	N/A	N/A	N/A	N/A	N/A	N/A	N/A	N/A	2	10.4	2	N/A	11.5	2	5.5	2	62.3	7	43.5		7	0	
	Loc 3	N/A	11.2	N/A	N/A	N/A	N/A	N/A	N/A	N/A	N/A	N/A	2	8.4	2	N/A	11.5	2	6.5	2	45.6	7	60.2		7	0	
	Loc 4	N/A	11.2	N/A	N/A	N/A	N/A	N/A	N/A	N/A	N/A	N/A	2	8.4	2	N/A	11.5	2	6.4	2	45.5	7	60.3		7	0	
11	Existing Lock	7.9	8.1	6	2	5.3	2	17.5	2	5.1	2	8	2	5.4	2	14	6.9	2	2.0	2	102.2	13.3			12	4.5	3.5
	Loc 2	7.9	11.5	N/A	N/A	N/A	N/A	N/A	N/A	N/A	N/A	N/A	2	12.3	2	N/A	10.3	2	6.7	2	56.7	8	45.5		8	0	
	Loc 3	N/A	11.5	N/A	N/A	N/A	N/A	N/A	N/A	N/A	N/A	N/A	2	10.3	2	N/A	10.3	2	7.7	2	47.8	8	54.4		8	0	
																				Average Time Difference (Min.) =			50.4				

Notes:

Columns 4 and 5 are reported in LPMS data for existing locks as a single value called "Chamber Entry". The values shown here for Chamber Entry are those from LPMS minus the estimated time of 6 min. for uncoupling which is included as Column 5.

Columns 6, 7, and 8 are reported in LPMS data for existing locks as a single value called "Chambering Time". The sum of the steps reported here equals those chambering times.

Columns 17 and 18 are reported in LPMS data for existing locks as a single value called "Exit - Fly, Exch, or Trnbk". The values shown here for Exit are those from LPMS minus the estimated time of 14 min. for recoupling which is included as Column 17.

For many of the steps the standard deviations were not known. Therefore the overall standard deviations (Column 27) is under-represented, especially for the Existing Locks (which have more steps).

Some of the items were not specifically studied. This was generally because there's no good way of estimating the time changes and because refining those steps would make little difference in the total lockage time.

Chamber Entry times (Column 4) and Exit times(Column 20) where estimated by using the entry/exit of a double plus 3.4 minutes. The 3.4 minutes is the additional time required to move the extra 600 feet of tow (moving 2mph) over the sill.

Performance Comparison of Without-Project versus with 1200' Locks

UPBOUND LOCKAGE STEPS WITH FLY APPROACH AND EXIT

		1	4	5	6	7	8	9	10	11	12	13	14	15	16	17	18	21	22	23	24	27	28	31	32	33	34
Lock Site	Lock Alternative	Approach (Fly)	Chamber Entry	Uncoup-ling (and backing 2nd cut out of chamber)	Gate Operation	Filling the Chamber	Gate Operation	Extract First Cut	Gate Operation	Emptying the Chamber	Gate Operation	2nd cut entry	Gate Operation	Filling the Chamber	Gate Operation	Tow Remake	Exit (Fly)	Gate Operation	Emptying the Chamber	Gate Operation	Total Lockage Time (min.) Fly	Standard Deviation	Time Savings on Doubles (Fly)		Standard Deviation (from Approach only)	Standard Deviation (from Extracting 1st cut only)	Standard Deviation (from Remake only)
L.G.	Existing Lock	17.1	8.3	6	2	3.0	2	13.7	2	3.2	2	8	2	3.0	2	14	10.2	N/A	N/A	N/A	98.5	11.0			9	5.3	3.5
	Loc 1	17.1	11.7	N/A	N/A	N/A	N/A	N/A	N/A	N/A	N/A	N/A	2	9.5	2	N/A	13.6	N/A	N/A	N/A	55.9	9.0	42.6		9	0	
	Former Singles	8.7	6.8	N/A	N/A	N/A	N/A	N/A	N/A	N/A	N/A	N/A	2	9.5	2	N/A	4	N/A	N/A	N/A	33.0						
	Loc 2	17.1	11.7	N/A	N/A	N/A	N/A	N/A	N/A	N/A	N/A	N/A	2	7.9	2	N/A	13.6	N/A	N/A	N/A	54.3	9.0	44.2		9	0	
	Former Singles	8.7	6.8	N/A	N/A	N/A	N/A	N/A	N/A	N/A	N/A	N/A	2	9.5	2	N/A	4	N/A	N/A	N/A	33.0						
Peo.	Existing Lock	16.7	11.0	6	2	4.0	2	13.8	2	4.4	2	8	2	4.0	2	14	9.9	N/A	N/A	N/A	103.8	12.6			11	5.1	3.5
	Loc 1	16.7	14.4	N/A	N/A	N/A	N/A	N/A	N/A	N/A	N/A	N/A	2	10.5	2	N/A	13.3	N/A	N/A	N/A	58.9	11.0	44.9		11	0	
	Former Singles	10.8	6.8	N/A	N/A	N/A	N/A	N/A	N/A	N/A	N/A	N/A	2	10.5	2	N/A	4.6	N/A	N/A	N/A	36.7						
	Loc 2	16.7	14.4	N/A	N/A	N/A	N/A	N/A	N/A	N/A	N/A	N/A	2	8.5	2	N/A	13.3	N/A	N/A	N/A	56.9	11.0	46.9		11	0	
	Former Singles	10.8	6.8	N/A	N/A	N/A	N/A	N/A	N/A	N/A	N/A	N/A	2	10.5	2	N/A	4.6	N/A	N/A	N/A	36.7						
25	Existing Lock	15.1	7.6	6	2	5.0	2	12.6	2	4.9	2	8	2	5.0	2	14	6.3	N/A	N/A	N/A	96.5	9.8			8	4.4	3.5
	Loc 1	13	11	N/A	N/A	N/A	N/A	N/A	N/A	N/A	N/A	N/A	2	13.7	2	N/A	9.7	N/A	N/A	N/A	51.4	7.0	45.1		7	0	
	Loc 2	13	11	N/A	N/A	N/A	N/A	N/A	N/A	N/A	N/A	N/A	2	10.0	2	N/A	9.7	N/A	N/A	N/A	47.7	7.0	48.8		7	0	
	Former Singles	7.2	6.8	N/A	N/A	N/A	N/A	N/A	N/A	N/A	N/A	N/A	2	10.0	2	N/A	3.4	N/A	N/A	N/A	31.4						
	Loc 3	13	11	N/A	N/A	N/A	N/A	N/A	N/A	N/A	N/A	N/A	2	8.0	2	N/A	9.7	N/A	N/A	N/A	45.7	7.0	50.8		7	0	
	Loc 3R	13	11	N/A	N/A	N/A	N/A	N/A	N/A	N/A	N/A	N/A	1.5	10.0	1.5	N/A	13.6	N/A	N/A	N/A	50.6	7.0	45.9		7	0	
	Former Singles	7.2	6.8	N/A	N/A	N/A	N/A	N/A	N/A	N/A	N/A	N/A	1.5	10.0	1.5	N/A	3.4	N/A	N/A	N/A	30.4						
	Loc 4	13	11	N/A	N/A	N/A	N/A	N/A	N/A	N/A	N/A	N/A	2	8.3	2	N/A	9.7	N/A	N/A	N/A	46.0	7.0	50.5		7	0	
	Some savings in upbound approach due to channel improvement																										
24	Existing Lock	15.9	7.5	6	2	6.2	2	13.3	2	5.0	2	8	2	6.2	2	14	8.0	N/A	N/A	N/A	102.1	10.5			9	4.1	3.5
	Loc 2	15.9	10.9	N/A	N/A	N/A	N/A	N/A	N/A	N/A	N/A	N/A	2	9.9	2	N/A	11.4	N/A	N/A	N/A	52.1	8.0	50.0		8	0	
	Former Singles	9.9	6.8	N/A	N/A	N/A	N/A	N/A	N/A	N/A	N/A	N/A	2	9.9	2	N/A	5	N/A	N/A	N/A	35.6						
	Loc 3	14	10.9	N/A	N/A	N/A	N/A	N/A	N/A	N/A	N/A	N/A	2	8.9	2	N/A	11.4	N/A	N/A	N/A	49.2	8.0	52.9		8	0	
	Loc 3R	14	10.9	N/A	N/A	N/A	N/A	N/A	N/A	N/A	N/A	N/A	1.5	9.9	1.5	N/A	11.4	N/A	N/A	N/A	49.2	8.0	52.9		8	0	
	Former Singles	9.9	6.8	N/A	N/A	N/A	N/A	N/A	N/A	N/A	N/A	N/A	1.5	9.9	1.5	N/A	5.0	N/A	N/A	N/A	34.6	0.0					
	Loc 4	14	10.9	N/A	N/A	N/A	N/A	N/A	N/A	N/A	N/A	N/A	2	7.8	2	N/A	11.4	N/A	N/A	N/A	48.1	8.0	54.0		8	0	
22	Existing Lock	35.9	8.4	6	2	3.0	2	15.0	2	2.8	2	8	2	3.0	2	14	10.1	N/A	N/A	N/A	118.2	15.9			15	4.1	3.5
	Loc 2	35.9	11.8	N/A	N/A	N/A	N/A	N/A	N/A	N/A	N/A	N/A	2	9.0	2	N/A	13.5	N/A	N/A	N/A	74.2	14.0	44.0		14	0	
	Former Singles	19	6.8	N/A	N/A	N/A	N/A	N/A	N/A	N/A	N/A	N/A	2	9.0	2	N/A	10.5	N/A	N/A	N/A	49.3						
	Loc 3	34	11.8	N/A	N/A	N/A	N/A	N/A	N/A	N/A	N/A	N/A	2	7.9	2	N/A	13.5	N/A	N/A	N/A	71.2	14.0	47.0		14	0	
	Loc 3R	34	11.8	N/A	N/A	N/A	N/A	N/A	N/A	N/A	N/A	N/A	1.5	9.0	1.5	N/A	13.5	N/A	N/A	N/A	71.3	14.0	46.9		14	0	
	Former Singles	19	6.8	N/A	N/A	N/A	N/A	N/A	N/A	N/A	N/A	N/A	1.5	9.0	1.5	N/A	10.5	N/A	N/A	N/A	48.3	0.0					
	Loc 4	34	11.8	N/A	N/A	N/A	N/A	N/A	N/A	N/A	N/A	N/A	2	7.9	2	N/A	13.5	N/A	N/A	N/A	71.2	14.0	47.0		14	0	
21	Existing Lock	22.7	7.4	6	2	2.2	2	13.1	2	2.3	2	8	2	2.2	2	14	7.1	N/A	N/A	N/A	97.0	19.9			19	4.6	3.5
	Loc 2	22.7	10.8	N/A	N/A	N/A	N/A	N/A	N/A	N/A	N/A	N/A	2	8.7	2	N/A	10.5	N/A	N/A	N/A	56.7	19.0	40.3		19	0	
	Former Singles	11.6	6.8	N/A	N/A	N/A	N/A	N/A	N/A	N/A	N/A	N/A	2	8.7	2	N/A	4.7	N/A	N/A	N/A	35.8						
	Loc 3	23	10.8	N/A	N/A	N/A	N/A	N/A	N/A	N/A	N/A	N/A	2	6.7	2	N/A	10.5	N/A	N/A	N/A	55.0	19.0	42.0		19	0	
	Loc 3R	23	10.8	N/A	N/A	N/A	N/A	N/A	N/A	N/A	N/A	N/A	1.5	8.7	1.5	N/A	10.5	N/A	N/A	N/A	56.0	19.0	41.0		19	0	
	Former Singles	11.6	6.8	N/A	N/A	N/A	N/A	N/A	N/A	N/A	N/A	N/A	1.5	8.7	1.5	N/A	4.7	N/A	N/A	N/A	34.8						
	Loc 4	23	10.8	N/A	N/A	N/A	N/A	N/A	N/A	N/A	N/A	N/A	2	6.7	2	N/A	10.5	N/A	N/A	N/A	55.0	19.0	42.0		19	0	
20	Existing Lock	30.9	7.0	6	2	3.8	2	14.4	2	3.7	2	8	2	3.8	2	14	6.4	N/A	N/A	N/A	110.0	16.2			15	5.1	3.5
	Loc 2	27	10.4	N/A	N/A	N/A	N/A	N/A	N/A	N/A	N/A	N/A	2	8.2	2	N/A	9.8	N/A	N/A	N/A	59.4	13.0	50.6		13	0	
	Former Singles	18.9	6.8	N/A	N/A	N/A	N/A	N/A	N/A	N/A	N/A	N/A	2	8.2	2	N/A	5.1	N/A	N/A	N/A	43.0						
	Loc 3	27	10.4	N/A	N/A	N/A	N/A	N/A	N/A	N/A	N/A	N/A	2	6.8	2	N/A	9.8	N/A	N/A	N/A	58.0	13.0	52.0		13	0	
	Loc 3R	27	10.4	N/A	N/A	N/A	N/A	N/A	N/A	N/A	N/A	N/A	1.5	8.2	1.5	N/A	9.8	N/A	N/A	N/A	58.4	13.0	51.6		13	0	
	Former Singles	18.9	6.8	N/A	N/A	N/A	N/A	N/A	N/A	N/A	N/A	N/A	1.5	8.2	1.5	N/A	5.1	N/A	N/A	N/A	42.0						
	Loc 4	27	10.4	N/A	N/A	N/A	N/A	N/A	N/A	N/A	N/A	N/A	2	6.0	2	N/A	9.8	N/A	N/A	N/A	57.2	13.0	52.8		13	0	
	Some savings in upbound approach due to channel improvement																										
19	Existing Lock	18	10.3	N/A	N/A	N/A	N/A	N/A	N/A	N/A	N/A	N/A	2	13.6	2	N/A	10.0	N/A	N/A	N/A	55.9	9.0			9	0	
	Loc 3	17	10.3	N/A	N/A	N/A	N/A	N/A	N/A	N/A	N/A	N/A	2	16.7	2	N/A	10.0	N/A	N/A	N/A	58.0	8.0	-2.1		8	0	
18	Existing Lock	16.1	6.4	6	2	3.6	2	14.3	2	3.3	2	8	2	3.6	2	14	6.3	N/A	N/A	N/A	93.6	9.2			7	4.9	3.5
	Loc 2	16.1	9.8	N/A	N/A	N/A	N/A	N/A	N/A	N/A	N/A	N/A	2	8.8	2	N/A	9.7	N/A	N/A	N/A	48.4	11.4	45.2		7	9	
	Former Singles	11.8	6.8	N/A	N/A	N/A	N/A	N/A	N/A	N/A	N/A	N/A	2	8.8	2	N/A	6.4	N/A	N/A	N/A	37.8						
	Loc 3	16	9.8	N/A	N/A	N/A	N/A	N/A	N/A	N/A	N/A	N/A	2	6.8	2	N/A	9.7	N/A	N/A	N/A	46.3	11.4	47.3		7	9	
	Loc 4	16	9.8	N/A	N/A	N/A	N/A	N/A	N/A	N/A	N/A	N/A	2	6.8	2	N/A	9.7	N/A	N/A	N/A	46.3	11.4	47.3		7	9	
17	Existing Lock	21.9	6.9	6	2	3.1	2	15.1	2	2.8	2	8	2	3.1	2	14	7.8	N/A	N/A	N/A	100.7	10.1			8	5.1	3.5
	Loc 1	19	10.3	N/A	N/A	N/A	N/A	N/A	N/A	N/A	N/A	N/A	2	8.7	2	N/A	11.2	N/A	N/A	N/A	53.2	7.0	47.5		7	0	
	Loc 2	19	10.3	N/A	N/A	N/A	N/A	N/A	N/A	N/A	N/A	N/A	2	7.7	2	N/A	11.2	N/A	N/A	N/A	52.2	7.0	48.5		7	0	
	Former Singles	14.2	6.8	N/A	N/A	N/A	N/A	N/A	N/A	N/A	N/A	N/A	2	7.7	2	N/A	7.3	N/A	N/A	N/A	40.0						
	Loc 3	19	10.3	N/A	N/A	N/A	N/A	N/A	N/A	N/A	N/A	N/A	2	5.7	2	N/A	11.2	N/A	N/A	N/A	50.2	7.0	50.5		7	0	
	Loc 4	19	10.3	N/A	N/A	N/A	N/A	N/A	N/A	N/A	N/A	N/A	2	5.4	2	N/A	14.6	N/A	N/A	N/A	53.3	7.0	47.4		7	0	
	Some savings in upbound approach due to channel improvement																										
16	Existing Lock	19.5	6.9	6	2	4.0	2	14.4	2	3.8	2	8	2	4.0	2	14	9.8	N/A	N/A	N/A	102.4	10.0			8	4.9	3.5
	Loc 2	18	10.3	N/A	N/A	N/A	N/A	N/A	N/A	N/A	N/A	N/A	2	8.7	2	N/A	13.2	N/A	N/A	N/A	54.2	7.0	48.2		7	0	
	Former Singles	13.4	6.8	N/A	N/A	N/A	N/A	N/A	N/A	N/A	N/A	N/A	2	8.7	2	N/A	8.3	N/A	N/A	N/A	41.2						
	Loc 3	18	10.3	N/A	N/A	N/A	N/A	N/A	N/A	N/A	N/A	N/A	2	6.7	2	N/A	13.2	N/A	N/A	N/A	52.2	7.0	50.2		7	0	
	Loc 4	18	10.3	N/A	N/A	N/A	N/A	N/A	N/A	N/A	N/A	N/A	2	6.6	2	N/A	13.2	N/A	N/A	N/A	52.1	7.0	50.3		7	0	
	Some savings in upbound approach due to channel improvement																										
15	Existing Lock	16.7	7.2	6	2	5.7	2	15.4	2	5.7	2	8	2	5.7	2	14	7.4	N/A	N/A	N/A	103.8	12.2			10	6	3.5
	Loc 2	15	10.6	N/A	N/A	N/A	N/A	N/A	N/A	N/A	N/A	N/A	2	10.8	2	N/A	10.8	N/A	N/A	N/A	51.2	9.0	52.6		9	0	
	Former Singles	8.5	6.8	N/A	N/A	N/A	N/A	N/A	N/A	N/A	N/A	N/A	2	10.8	2	N/A	5.8	N/A	N/A	N/A	35.9						
	Loc 3	15	10.6	N/A	N/A	N/A	N/A	N/A	N/A	N/A	N/A	N/A	2	10.1	2	N/A	10.8	N/A	N/A	N/A	50.5	9.0	53.3		9	0	
	Some savings in upbound approach due to channel improvement																									0	
14	Existing Lock	15.3	8.1	6	2	4.5	2	14.2	2	4.6	2	8	2	4.5	2	14	9.2	N/A	N/A	N/A	100.4	10.6			9	4.3	3.5
	Loc 2	15.3	11.5	N/A	N/A	N/A	N/A	N/A	N/A	N/A	N/A	N/A	2	9.8	2	N/A	12.6	N/A	N/A	N/A	53.2	8.0	47.2		8	0	
	Former Singles	9.1	6.8	N/A	N/A	N/A	N/A	N/A	N/A	N/A	N/A	N/A	2	9.8	2	N/A	5.8	N/A	N/A	N/A	35.5						
	Loc 4	15	11.5	N/A	N/A	N/A	N/A	N/A	N/A	N/A	N/A	N/A	2	8.9	2	N/A	12.6	N/A	N/A	N/A	52.0	8.0	48.4		8	0	
13	Existing Lock	14	5.6	6	2	4.2	2	13.1	2	4.1	2	8	2	4.2	2	14	4.8	N/A	N/A	N/A	90.0	8.3			6	4.6	3.5
	Loc 2	14	9	N/A	N/A	N/A	N/A	N/A	N/A	N/A	N/A	N/A	2	9.4	2	N/A	8.2	N/A	N/A	N/A	44.6	6.0	45.4		6	0	
	Loc 3	14	9	N/A	N/A	N/A	N/A	N/A	N/A	N/A	N/A	N/A	2	7.4	2	N/A	8.2	N/A	N/A	N/A	42.6	6.0	47.4		6	0	
	Loc 4	14	9	N/A	N/A	N/A	N/A	N/A	N/A	N/A	N/A	N/A	2	7.5	2	N/A	8.2	N/A	N/A	N/A	42.7	6.0	47.3		6	0	
12	Existing Lock	16	6.5	6	2	3.9	2	12.2	2	4.1	2	8	2	3.9	2	14	5.1	N/A	N/A	N/A	91.7	7.9			6	3.8	3.5
	Loc 2	15	9.9	N/A	N/A	N/A	N/A	N/A	N/A	N/A	N/A	N/A	2	8.5	2	N/A	8.5	N/A	N/A	N/A	45.9	6.0	45.8		6	0	
	Loc 3	15	9.9	N/A	N/A	N/A	N/A	N/A	N/A	N/A	N/A	N/A	2	6.5	2	N/A	8.5	N/A	N/A	N/A	43.9	6.0	47.8		6	0	
	Loc 4	15	9.9	N/A	N/A	N/A	N/A	N/A	N/A	N/A	N/A	N/A	2	6.4	2	N/A	8.5	N/A	N/A	N/A	43.8	6.0	47.9		6	0	
11	Existing Lock	18	6.7	6	2	5.1	2	16.7	2	5.3	2	8	2	5.1	2	14	8.3	N/A	N/A	N/A	105.3	11.8			8	8	3.5
	Loc 2	18	10.1	N/A	N/A	N/A	N/A	N/A	N/A	N/A	N/A	N/A	2	9.7	2	N/A	11.7	N/A	N/A	N/A	53.5	8.0	51.8		8	0	
	Loc 3	18	10.1	N/A	N/A	N/A	N/A	N/A	N/A	N/A	N/A	N/A	2	7.7	2	N/A	11.7	N/A	N/A	N/A	51.5	8.0	53.8		8	0	
																					Average Time Difference (Min.) =		47.0				

Notes:

Columns 4 and 5 are reported in LPMS data for existing locks as a single value called "Chamber Entry". The values shown here for Chamber Entry are those from LPMS minus the estimated time of 6 min. for uncoupling which is included as Column 5.

Columns 6, 7, and 8 are reported in LPMS data for existing locks as a single value called "Chambering Time". The sum of the steps reported here equals those chambering times.

Columns 17 and 18 are reported in LPMS data for existing locks as a single value called "Exit - Fly, Exch, or Trnbk". The values shown here for Exit are those from LPMS minus the estimated time of 14 min. for recoupling which is included as Column 17.

For many of the steps the standard deviations were not known. Therefore the overall standard deviations (Column 27) is under-represented, especially for the Existing Locks (which have more steps).

Some of the items were not specifically studied. This was generally because there's no good way of estimating the time changes and because refining those steps would make little difference in the total lockage time.

Chamber Entry times (Column 4) and Exit times(Column 18) where estimated by using the entry/exit of a double plus 3.4 minutes. The 3.4 minutes is the additional time required to move the extra 600 feet of tow (moving 2mph) over the sill.

Performance Comparison of Without-Project versus with 1200' Locks

UPBOUND LOCKAGE STEPS WITH EXCHANGE APPROACH AND EXIT

		2	4	5	6	7	8	9	10	11	12	13	14	15	16	17	19	21	22	23	25	27	29	31	32	33	34
Lock Site	Lock Alternative	Approach (Exchange)	Chamber Entry	Uncoup-ling (and backing 2nd cut out of chamber)	Gate Operation	Filling the Chamber	Gate Operation	Extract First Cut	Gate Operation	Emptying the Chamber	Gate Operation	2nd cut entry	Gate Operation	Filling the Chamber	Gate Operation	Tow Remake	Exit (Exchange)	Gate Operation	Emptying the Chamber	Gate Operation	Total Lockage Time (min.) Exchange	Standard Deviation	Time Savings on Doubles (Exchange)		Standard Deviation (from Approach only)	Standard Deviation (from Extracting 1st cut only)	Standard Deviation (from Remake only)
L.G.	Existing Lock	21.9	8.3	6	2	3.0	2	13.7	2	3.2	2	8	2	3.0	2	14	18.3	N/A	N/A	N/A	111.4	11.0			9	5.3	3.5
	Loc 1	21.9	11.7	N/A	N/A	N/A	N/A	N/A	N/A	N/A	N/A	N/A	2	9.5	2	N/A	21.7	N/A	N/A	N/A	68.8	9.0	42.6		9	0	
	Former Singles	13.3	6.8	N/A	N/A	N/A	N/A	N/A	N/A	N/A	N/A	N/A	2	9.5	2	N/A	9.4	N/A	N/A	N/A	43.0						
	Loc 2	21.9	11.7	N/A	N/A	N/A	N/A	N/A	N/A	N/A	N/A	N/A	2	7.9	2	N/A	21.7	N/A	N/A	N/A	67.2	9.0	44.2		9	0	
	Former Singles	13.3	6.8	N/A	N/A	N/A	N/A	N/A	N/A	N/A	N/A	N/A	2	9.5	2	N/A	9.4	N/A	N/A	N/A	43.0						
Peo.	Existing Lock	22.1	11.0	6	2	4.0	2	13.8	2	4.4	2	8	2	4.0	2	14	14.2	N/A	N/A	N/A	113.5	12.6			11	5.1	3.5
	Loc 1	22.1	14.4	N/A	N/A	N/A	N/A	N/A	N/A	N/A	N/A	N/A	2	10.5	2	N/A	17.6	N/A	N/A	N/A	68.6	11.0	44.9		11	0	
	Former Singles	10.7	6.8	N/A	N/A	N/A	N/A	N/A	N/A	N/A	N/A	N/A	2	10.5	2	N/A	8.9	N/A	N/A	N/A	40.9						
	Loc 2	22.1	14.4	N/A	N/A	N/A	N/A	N/A	N/A	N/A	N/A	N/A	2	8.5	2	N/A	17.6	N/A	N/A	N/A	66.6	11.0	46.9		11	0	
	Former Singles	10.7	6.8	N/A	N/A	N/A	N/A	N/A	N/A	N/A	N/A	N/A	2	10.5	2	N/A	8.9	N/A	N/A	N/A	40.9						
25	Existing Lock	17.1	7.6	6	2	5.0	2	12.6	2	4.9	2	8	2	5.0	2	14	9.1	N/A	N/A	N/A	101.3	9.8			8	4.4	3.5
	Loc 1	17.1	11	N/A	N/A	N/A	N/A	N/A	N/A	N/A	N/A	N/A	2	13.7	2	N/A	12.5	N/A	N/A	N/A	58.3	7.0	43.0		7	0	
	Loc 2	17.1	11	N/A	N/A	N/A	N/A	N/A	N/A	N/A	N/A	N/A	2	10.0	2	N/A	12.5	N/A	N/A	N/A	54.6	7.0	46.7		7	0	
	Former Singles	7.5	6.8	N/A	N/A	N/A	N/A	N/A	N/A	N/A	N/A	N/A	2	10.0	2	N/A	4.1	N/A	N/A	N/A	32.4						
	Loc 3	17.1	11	N/A	N/A	N/A	N/A	N/A	N/A	N/A	N/A	N/A	2	8.0	2	N/A	12.5	N/A	N/A	N/A	52.6	7.0	48.7		7	0	
	Loc 3R	17.1	11	N/A	N/A	N/A	N/A	N/A	N/A	N/A	N/A	N/A	1.5	10.0	1.5	N/A	12.5	N/A	N/A	N/A	53.6	7.0	47.7		7	0	
	Former Singles	7.5	6.8	N/A	N/A	N/A	N/A	N/A	N/A	N/A	N/A	N/A	1.5	10.0	1.5	N/A	4.1	N/A	N/A	N/A	31.4						
	Loc 4	17.1	11	N/A	N/A	N/A	N/A	N/A	N/A	N/A	N/A	N/A	2	8.3	2	N/A	12.5	N/A	N/A	N/A	52.9	7.0	48.4		7	0	
24	Existing Lock	15.5	7.5	6	2	6.2	2	13.3	2	5.0	2	8	2	6.2	2	14	11.6	N/A	N/A	N/A	105.3	10.5			9	4.1	3.5
	Loc 2	15.5	10.9	N/A	N/A	N/A	N/A	N/A	N/A	N/A	N/A	N/A	2	9.9	2	N/A	15	N/A	N/A	N/A	55.3	8.0	50.0		8	0	
	Former Singles	7.8	6.8	N/A	N/A	N/A	N/A	N/A	N/A	N/A	N/A	N/A	2	9.9	2	N/A	8.7	N/A	N/A	N/A	37.2						
	Loc 3	15.5	10.9	N/A	N/A	N/A	N/A	N/A	N/A	N/A	N/A	N/A	2	8.9	2	N/A	15	N/A	N/A	N/A	54.3	8.0	51.0		8	0	
	Loc 3R	15.5	10.9	N/A	N/A	N/A	N/A	N/A	N/A	N/A	N/A	N/A	1.5	9.9	1.5	N/A	15	N/A	N/A	N/A	54.3	8.0	51.0		8	0	
	Former Singles	7.8	6.8	N/A	N/A	N/A	N/A	N/A	N/A	N/A	N/A	N/A	1.5	9.9	1.5	N/A	8.7	N/A	N/A	N/A	36.2						
	Loc 4	15.5	10.9	N/A	N/A	N/A	N/A	N/A	N/A	N/A	N/A	N/A	2	7.8	2	N/A	15	N/A	N/A	N/A	53.2	8.0	52.1		8	0	
22	Existing Lock	23.6	8.4	6	2	3.0	2	15.0	2	2.8	2	8	2	3.0	2	14	16.4	N/A	N/A	N/A	112.2	15.9			15	4.1	3.5
	Loc 2	23.6	11.8	N/A	N/A	N/A	N/A	N/A	N/A	N/A	N/A	N/A	2	9.0	2	N/A	19.8	N/A	N/A	N/A	68.2	14.0	44.0		14	0	
	Former Singles	9.6	6.8	N/A	N/A	N/A	N/A	N/A	N/A	N/A	N/A	N/A	2	9.0	2	N/A	10.3	N/A	N/A	N/A	39.7						
	Loc 3	23.6	11.8	N/A	N/A	N/A	N/A	N/A	N/A	N/A	N/A	N/A	2	7.9	2	N/A	19.8	N/A	N/A	N/A	67.1	14.0	45.1		14	0	
	Loc 3R	23.6	11.8	N/A	N/A	N/A	N/A	N/A	N/A	N/A	N/A	N/A	1.5	9.0	1.5	N/A	19.8	N/A	N/A	N/A	67.2	14.0	45.0		14	0	
	Former Singles	9.6	6.8	N/A	N/A	N/A	N/A	N/A	N/A	N/A	N/A	N/A	1.5	9.0	1.5	N/A	10.3	N/A	N/A	N/A	38.7	0.0					
	Loc 4	23.6	11.8	N/A	N/A	N/A	N/A	N/A	N/A	N/A	N/A	N/A	2	7.9	2	N/A	19.8	N/A	N/A	N/A	67.1	14.0	45.1		14	0	
21	Existing Lock	22.6	7.4	6	2	2.2	2	13.1	2	2.3	2	8	2	2.2	2	14	9.7	N/A	N/A	N/A	99.5	19.9			19	4.6	3.5
	Loc 2	22.6	10.8	N/A	N/A	N/A	N/A	N/A	N/A	N/A	N/A	N/A	2	8.7	2	N/A	13.1	N/A	N/A	N/A	59.2	19.0	40.3		19	0	
	Former Singles	9.9	6.8	N/A	N/A	N/A	N/A	N/A	N/A	N/A	N/A	N/A	2	8.7	2	N/A	5.7	N/A	N/A	N/A	35.1						
	Loc 3	22.6	10.8	N/A	N/A	N/A	N/A	N/A	N/A	N/A	N/A	N/A	2	6.7	2	N/A	13.1	N/A	N/A	N/A	57.2	19.0	42.3		19	0	
	Loc 3R	22.6	10.8	N/A	N/A	N/A	N/A	N/A	N/A	N/A	N/A	N/A	1.5	8.7	1.5	N/A	13.1	N/A	N/A	N/A	58.2	19.0	41.3		19	0	
	Former Singles	9.9	6.8	N/A	N/A	N/A	N/A	N/A	N/A	N/A	N/A	N/A	1.5	8.7	1.5	N/A	5.7	N/A	N/A	N/A	34.1						
	Loc 4	22.6	10.8	N/A	N/A	N/A	N/A	N/A	N/A	N/A	N/A	N/A	2	6.7	2	N/A	13.1	N/A	N/A	N/A	57.2	19.0	42.3		19	0	
20	Existing Lock	22.3	7.0	6	2	3.8	2	14.4	2	3.7	2	8	2	3.8	2	14	9.6	N/A	N/A	N/A	104.6	16.2			15	5.1	3.5
	Loc 2	22.3	10.4	N/A	N/A	N/A	N/A	N/A	N/A	N/A	N/A	N/A	2	8.2	2	N/A	13	N/A	N/A	N/A	57.9	13.0	46.7		13	0	
	Former Singles	11.4	6.8	N/A	N/A	N/A	N/A	N/A	N/A	N/A	N/A	N/A	2	8.2	2	N/A	7.1	N/A	N/A	N/A	37.5						
	Loc 3	22.3	10.4	N/A	N/A	N/A	N/A	N/A	N/A	N/A	N/A	N/A	2	6.8	2	N/A	13	N/A	N/A	N/A	56.5	13.0	48.1		13	0	
	Loc 3R	22.3	10.4	N/A	N/A	N/A	N/A	N/A	N/A	N/A	N/A	N/A	1.5	8.2	1.5	N/A	13	N/A	N/A	N/A	56.9	13.0	47.7		13	0	
	Former Singles	11.4	6.8	N/A	N/A	N/A	N/A	N/A	N/A	N/A	N/A	N/A	1.5	8.2	1.5	N/A	7.1	N/A	N/A	N/A	36.5						
	Loc 4	22.3	10.4	N/A	N/A	N/A	N/A	N/A	N/A	N/A	N/A	N/A	2	6.0	2	N/A	13	N/A	N/A	N/A	55.7	13.0	48.9		13	0	
19	Existing Lock	28.7	10.3	N/A	N/A	N/A	N/A	N/A	N/A	N/A	N/A	N/A	2	13.6	2	N/A	11.8	N/A	N/A	N/A	68.4	9.0			9	0	
	Loc 3	28.7	10.3	N/A	N/A	N/A	N/A	N/A	N/A	N/A	N/A	N/A	2	16.7	2	N/A	11.8	N/A	N/A	N/A	71.5	8.0	-3.1		8	0	
18	Existing Lock	19.4	6.4	6	2	3.6	2	14.3	2	3.3	2	8	2	3.6	2	14	8.3	N/A	N/A	N/A	98.9	9.2			7	4.9	3.5
	Loc 2	19.4	9.8	N/A	N/A	N/A	N/A	N/A	N/A	N/A	N/A	N/A	2	8.8	2	N/A	11.7	N/A	N/A	N/A	53.7	11.4	45.2		7	9	
	Former Singles	10.2	6.8	N/A	N/A	N/A	N/A	N/A	N/A	N/A	N/A	N/A	2	8.8	2	N/A	5.9	N/A	N/A	N/A	35.7						
	Loc 3	19.4	9.8	N/A	N/A	N/A	N/A	N/A	N/A	N/A	N/A	N/A	2	6.8	2	N/A	11.7	N/A	N/A	N/A	51.7	11.4	47.2		7	9	
	Loc 4	19.4	9.8	N/A	N/A	N/A	N/A	N/A	N/A	N/A	N/A	N/A	2	6.8	2	N/A	11.7	N/A	N/A	N/A	51.7	11.4	47.2		7	9	
17	Existing Lock	16.2	6.9	6	2	3.1	2	15.1	2	2.8	2	8	2	3.1	2	14	11.8	N/A	N/A	N/A	99.0	10.1			8	5.1	3.5
	Loc 1	16.2	10.3	N/A	N/A	N/A	N/A	N/A	N/A	N/A	N/A	N/A	2	8.7	2	N/A	15.2	N/A	N/A	N/A	54.4	7.0	44.6		7	0	
	Loc 2	16.2	10.3	N/A	N/A	N/A	N/A	N/A	N/A	N/A	N/A	N/A	2	7.7	2	N/A	15.2	N/A	N/A	N/A	53.4	7.0	45.6		7	0	
	Former Singles	9.9	6.8	N/A	N/A	N/A	N/A	N/A	N/A	N/A	N/A	N/A	2	7.7	2	N/A	10.3	N/A	N/A	N/A	38.7						
	Loc 3	16.2	10.3	N/A	N/A	N/A	N/A	N/A	N/A	N/A	N/A	N/A	2	5.7	2	N/A	15.2	N/A	N/A	N/A	51.4	7.0	47.6		7	0	
	Loc 4	16.2	10.3	N/A	N/A	N/A	N/A	N/A	N/A	N/A	N/A	N/A	2	5.4	2	N/A	15.2	N/A	N/A	N/A	51.1	7.0	47.9		7	0	
16	Existing Lock	14.9	6.9	6	2	4.0	2	14.4	2	3.8	2	8	2	4.0	2	14	7.2	N/A	N/A	N/A	95.2	10.0			8	4.9	3.5
	Loc 2	14.9	10.3	N/A	N/A	N/A	N/A	N/A	N/A	N/A	N/A	N/A	2	8.7	2	N/A	10.6	N/A	N/A	N/A	48.5	7.0	46.7		7	0	
	Former Singles	7.1	6.8	N/A	N/A	N/A	N/A	N/A	N/A	N/A	N/A	N/A	2	8.7	2	N/A	5.8	N/A	N/A	N/A	32.4						
	Loc 3	14.9	10.3	N/A	N/A	N/A	N/A	N/A	N/A	N/A	N/A	N/A	2	6.7	2	N/A	10.6	N/A	N/A	N/A	46.5	7.0	48.7		7	0	
	Loc 4	14.9	10.3	N/A	N/A	N/A	N/A	N/A	N/A	N/A	N/A	N/A	2	6.6	2	N/A	10.6	N/A	N/A	N/A	46.4	7.0	48.8		7	0	
15	Existing Lock	31.8	7.2	6	2	5.7	2	15.4	2	5.7	2	8	2	5.7	2	14	9.9	N/A	N/A	N/A	121.4	12.2			10	6	3.5
	Loc 2	31.8	10.6	N/A	N/A	N/A	N/A	N/A	N/A	N/A	N/A	N/A	2	10.8	2	N/A	13.3	N/A	N/A	N/A	70.5	9.0	50.9		9	0	
	Former Singles	16.1	6.8	N/A	N/A	N/A	N/A	N/A	N/A	N/A	N/A	N/A	2	10.8	2	N/A	8.1	N/A	N/A	N/A	45.8						
	Loc 3	31.8	10.6	N/A	N/A	N/A	N/A	N/A	N/A	N/A	N/A	N/A	2	10.1	2	N/A	13.3	N/A	N/A	N/A	69.8	9.0	51.6		9	0	
																										0	
14	Existing Lock	17.6	8.1	6	2	4.5	2	14.2	2	4.6	2	8	2	4.5	2	14	12.7	N/A	N/A	N/A	106.2	10.6			9	4.3	3.5
	Loc 2	17.6	11.5	N/A	N/A	N/A	N/A	N/A	N/A	N/A	N/A	N/A	2	9.8	2	N/A	16.1	N/A	N/A	N/A	59.0	8.0	47.2		8	0	
	Former Singles	8.9	6.8	N/A	N/A	N/A	N/A	N/A	N/A	N/A	N/A	N/A	2	9.8	2	N/A	7.2	N/A	N/A	N/A	36.7						
	Loc 4	17.6	11.5	N/A	N/A	N/A	N/A	N/A	N/A	N/A	N/A	N/A	2	8.9	2	N/A	16.1	N/A	N/A	N/A	58.1	8.0	48.1		8	0	
13	Existing Lock	12.6	5.6	6	2	4.2	2	13.1	2	4.1	2	8	2	4.2	2	14	8.1	N/A	N/A	N/A	91.9	8.3			6	4.6	3.5
	Loc 2	12.6	9	N/A	N/A	N/A	N/A	N/A	N/A	N/A	N/A	N/A	2	9.4	2	N/A	11.5	N/A	N/A	N/A	46.5	6.0	45.4		6	0	
	Loc 3	12.6	9	N/A	N/A	N/A	N/A	N/A	N/A	N/A	N/A	N/A	2	7.4	2	N/A	11.5	N/A	N/A	N/A	44.5	6.0	47.4		6	0	
	Loc 4	12.6	9	N/A	N/A	N/A	N/A	N/A	N/A	N/A	N/A	N/A	2	7.5	2	N/A	11.5	N/A	N/A	N/A	44.6	6.0	47.3		6	0	
12	Existing Lock	14.8	6.5	6	2	3.9	2	12.2	2	4.1	2	8	2	3.9	2	14	6.2	N/A	N/A	N/A	91.6	7.9			6	3.8	3.5
	Loc 2	14.8	9.9	N/A	N/A	N/A	N/A	N/A	N/A	N/A	N/A	N/A	2	8.5	2	N/A	9.6	N/A	N/A	N/A	46.8	6.0	44.8		6	0	
	Loc 3	14.8	9.9	N/A	N/A	N/A	N/A	N/A	N/A	N/A	N/A	N/A	2	6.5	2	N/A	9.6	N/A	N/A	N/A	44.8	6.0	46.8		6	0	
	Loc 4	14.8	9.9	N/A	N/A	N/A	N/A	N/A	N/A	N/A	N/A	N/A	2	6.4	2	N/A	9.6	N/A	N/A	N/A	44.7	6.0	46.9		6	0	
11	Existing Lock	11	6.7	6	2	5.1	2	16.7	2	5.3	2	8	2	5.1	2	14	6.8	N/A	N/A	N/A	96.8	11.8			8	8	3.5
	Loc 2	11	10.1	N/A	N/A	N/A	N/A	N/A	N/A	N/A	N/A	N/A	2	9.7	2	N/A	10.2	N/A	N/A	N/A	45.0	8.0	51.8		8	0	
	Loc 3	11	10.1	N/A	N/A	N/A	N/A	N/A	N/A	N/A	N/A	N/A	2	7.7	2	N/A	10.2	N/A	N/A	N/A	43.0	8.0	53.8		8	0	
																				Average Time Difference (Min.) =			45.9				

Notes:

Columns 4 and 5 are reported in LPMS data for existing locks as a single value called "Chamber Entry". The values shown here for Chamber Entry are those from LPMS minus the estimated time of 6 min. for uncoupling which is included as Column 5.

Columns 6, 7, and 8 are reported in LPMS data for existing locks as a single value called "Chambering Time". The sum of the steps reported here equals those chambering times.

Columns 17 and 18 are reported in LPMS data for existing locks as a single value called "Exit - Fly, Exch, or Trnbk". The values shown here for Exit are those from LPMS minus the estimated time of 14 min. for recoupling which is included as Column 17

For many of the steps the standard deviations were not known. Therefore the overall standard deviations (Column 27) is under-represented, especially for the Existing Locks (which have more steps).

Some of the items were not specifically studied. This was generally because there's no good way of estimating the time changes and because refining those steps would make little difference in the total lockage time.

Chamber Entry times (Column 4) and Exit times(Column 19) where estimated by using the entry/exit of a double plus 3.4 minutes. The 3.4 minutes is the additional time required to move the extra 600 feet of tow (moving 2mph) over the sill.

Performance Comparison of Without-Project versus with 1200' Locks

UPBOUND LOCKAGE STEPS WITH TURNBACK APPROACH AND EXIT

		3	4	5	6	7	8	9	10	11	12	13	14	15	16	17	20	21	22	23	26	27	30	31	32	33	34
Lock Site	Lock Alternative	Approach (Turnback)	Chamber Entry	Uncoup-ling (and backing 2nd cut out of chamber)	Gate Operation	Filling the Chamber	Gate Operation	Extract First Cut	Gate Operation	Emptying the Chamber	Gate Operation	2nd cut entry	Gate Operation	Filling the Chamber	Gate Operation	Tow Remake	Exit (Turnback)	Gate Operation	Emptying the Chamber	Gate Operation	Total Lockage Time (min.) Turnback	Standard Deviation	Time Savings on Doubles (Turnback)		Standard Deviation (from Approach only)	Standard Deviation (from Extracting 1st cut only)	Standard Deviation (from Remake only)
L.G.	Existing Lock	4.1	8.3	6	2	3.0	2	13.7	2	3.2	2	8	2	3.0	2	14	9.3	2	2.0	2	90.6	11.0			9	5.3	3.5
	Loc 1	4.1	11.7	N/A	N/A	N/A	N/A	N/A	N/A	N/A	N/A	N/A	2	9.5	2	N/A	12.7	2	10.3	2	56.3	9.0	34.3		9	0	
	Former Singles	2.3	6.8	N/A	N/A	N/A	N/A	N/A	N/A	N/A	N/A	N/A	2	9.5	2	N/A	6.9	2	10.3	2	43.8						
	Loc 2	4.1	11.7	N/A	N/A	N/A	N/A	N/A	N/A	N/A	N/A	N/A	2	7.9	2	N/A	12.7	2	6.4	2	50.8	9.0	39.8		9	0	
	Former Singles	2.3	6.8	N/A	N/A	N/A	N/A	N/A	N/A	N/A	N/A	N/A	2	9.5	2	N/A	6.9	2	10.3	2	43.8						
Peo.	Existing Lock	3.6	11.0	6	2	4.0	2	13.8	2	4.4	2	8	2	4.0	2	14	9.9	2	2.0	2	96.7	12.6			11	5.1	3.5
	Loc 1	3.6	14.4	N/A	N/A	N/A	N/A	N/A	N/A	N/A	N/A	N/A	2	10.5	2	N/A	13.3	2	11.7	2	61.5	11.0	35.2		11	0	
	Former Singles	2.5	6.8	N/A	N/A	N/A	N/A	N/A	N/A	N/A	N/A	N/A	2	10.5	2	N/A	6.3	2	11.7	2	45.8						
	Loc 2	3.6	14.4	N/A	N/A	N/A	N/A	N/A	N/A	N/A	N/A	N/A	2	8.5	2	N/A	13.3	2	7.4	2	55.2	11.0	41.5		11	0	
	Former Singles	2.5	6.8	N/A	N/A	N/A	N/A	N/A	N/A	N/A	N/A	N/A	2	10.5	2	N/A	6.3	2	11.7	2	45.8						
25	Existing Lock	3.3	7.6	6	2	5.0	2	12.6	2	4.9	2	8	2	5.0	2	14	6.5	2	2.0	2	90.9	9.8			8	4.4	3.5
	Loc 1	3.3	11	N/A	N/A	N/A	N/A	N/A	N/A	N/A	N/A	N/A	2	13.7	2	N/A	9.9	2	14.2	2	60.1	7.0	30.8		7	0	
	Loc 2	3.3	11	N/A	N/A	N/A	N/A	N/A	N/A	N/A	N/A	N/A	2	10.0	2	N/A	9.9	2	9.9	2	52.1	7.0	38.8		7	0	
	Former Singles	2.4	6.8	N/A	N/A	N/A	N/A	N/A	N/A	N/A	N/A	N/A	2	10.0	2	N/A	3.8	2	9.9	2	40.9						
	Loc 3	N/A	11	N/A	N/A	N/A	N/A	N/A	N/A	N/A	N/A	N/A	2	8.0	2	N/A	9.9	2	10.9	2	47.8	7.0	43.1		7	0	
	Loc 3R	3.3	11	N/A	N/A	N/A	N/A	N/A	N/A	N/A	N/A	N/A	1.5	10.0	1.5	N/A	9.9	1.5	9.9	1.5	50.1	7.0	40.8		7	0	
	Former Singles	2.4	6.8	N/A	N/A	N/A	N/A	N/A	N/A	N/A	N/A	N/A	1.5	10.0	1.5	N/A	3.8	1.5	9.9	1.5	38.9						
	Loc 4	N/A	11	N/A	N/A	N/A	N/A	N/A	N/A	N/A	N/A	N/A	2	8.3	2	N/A	9.9	2	10.3	2	47.5	7.0	43.4		7	0	
24	Existing Lock	3.5	7.5	6	2	6.2	2	13.3	2	5.0	2	8	2	6.2	2	14	7.0	2	2.0	2	94.7	10.5			9	4.1	3.5
	Loc 2	3.5	10.9	N/A	N/A	N/A	N/A	N/A	N/A	N/A	N/A	N/A	2	9.9	2	N/A	10.4	2	9.6	2	52.3	8.0	42.4		8	0	
	Former Singles	2.1	6.8	N/A	N/A	N/A	N/A	N/A	N/A	N/A	N/A	N/A	2	9.9	2	N/A	4.8	2	9.6	2	41.2	0.0					
	Loc 3	N/A	10.9	N/A	N/A	N/A	N/A	N/A	N/A	N/A	N/A	N/A	2	8.9	2	N/A	10.4	2	12.5	2	50.7	8.0	44.0		8	0	
	Loc 3R	3.5	10.9	N/A	N/A	N/A	N/A	N/A	N/A	N/A	N/A	N/A	1.5	9.9	1.5	N/A	10.4	1.5	9.6	1.5	50.3	8.0	44.4		8	0	
	Former Singles	2.1	6.8	N/A	N/A	N/A	N/A	N/A	N/A	N/A	N/A	N/A	1.5	9.9	1.5	N/A	4.8	1.5	9.6	1.5	39.2						
	Loc 4	N/A	10.9	N/A	N/A	N/A	N/A	N/A	N/A	N/A	N/A	N/A	2	7.8	2	N/A	10.4	2	9.8	2	46.9	8.0	47.8		8	0	
22	Existing Lock	6.3	8.4	6	2	3.0	2	15.0	2	2.8	2	8	2	3.0	2	14	7.3	2	2.0	2	91.8	15.9			15	4.1	3.5
	Loc 2	6.3	11.8	N/A	N/A	N/A	N/A	N/A	N/A	N/A	N/A	N/A	2	9.0	2	N/A	10.7	2	6.3	2	52.1	14.0	39.7		14	0	
	Former Singles	4	6.8	N/A	N/A	N/A	N/A	N/A	N/A	N/A	N/A	N/A	2	9.0	2	N/A	5	2	6.3	2	39.1						
	Loc 3	N/A	11.8	N/A	N/A	N/A	N/A	N/A	N/A	N/A	N/A	N/A	2	7.9	2	N/A	10.7	2	11.3	2	49.7	14.0	42.1		14	0	
	Loc 3R	6.3	11.8	N/A	N/A	N/A	N/A	N/A	N/A	N/A	N/A	N/A	1.5	9.0	1.5	N/A	10.7	1.5	8.3	1.5	52.1	14.0	39.7		14	0	
	Former Singles	4	6.8	N/A	N/A	N/A	N/A	N/A	N/A	N/A	N/A	N/A	1.5	9.0	1.5	N/A	5	1.5	8.3	1.5	39.1						
	Loc 4	N/A	11.8	N/A	N/A	N/A	N/A	N/A	N/A	N/A	N/A	N/A	2	7.9	2	N/A	10.7	2	9.4	2	47.8	14.0	44.0		14	0	
21	Existing Lock	6.6	7.4	6	2	2.2	2	13.1	2	2.3	2	8	2	2.2	2	14	7.4	2	2.0	2	87.2	19.9			19	4.6	3.5
	Loc 2	6.6	10.8	N/A	N/A	N/A	N/A	N/A	N/A	N/A	N/A	N/A	2	8.7	2	N/A	10.8	2	7.7	2	52.6	19.0	34.6		19	0	
	Former Singles	3.8	6.8	N/A	N/A	N/A	N/A	N/A	N/A	N/A	N/A	N/A	2	8.7	2	N/A	3.7	2	7.7	2	38.7						
	Loc 3	N/A	10.8	N/A	N/A	N/A	N/A	N/A	N/A	N/A	N/A	N/A	2	6.7	2	N/A	10.8	2	8.7	2	45.0	19.0	42.2		19	0	
	Loc 3R	6.6	10.8	N/A	N/A	N/A	N/A	N/A	N/A	N/A	N/A	N/A	1.5	8.7	1.5	N/A	10.8	1.5	7.7	1.5	50.6	19.0	36.6		19	0	
	Former Singles	3.8	6.8	N/A	N/A	N/A	N/A	N/A	N/A	N/A	N/A	N/A	1.5	8.7	1.5	N/A	3.7	1.5	7.7	1.5	36.7						
	Loc 4	N/A	10.8	N/A	N/A	N/A	N/A	N/A	N/A	N/A	N/A	N/A	2	6.7	2	N/A	10.8	2	8.7	2	45.0	19.0	42.2		19	0	
20	Existing Lock	6.3	7.0	6	2	3.8	2	14.4	2	3.7	2	8	2	3.8	2	14	5.9	2	2.0	2	90.9	16.2			15	5.1	3.5
	Loc 2	6.3	10.4	N/A	N/A	N/A	N/A	N/A	N/A	N/A	N/A	N/A	2	8.2	2	N/A	9.3	2	6.9	2	49.1	13.0	41.8		13	0	
	Former Singles	4.2	6.8	N/A	N/A	N/A	N/A	N/A	N/A	N/A	N/A	N/A	2	8.2	2	N/A	4.5	2	6.9	2	38.6						
	Loc 3	N/A	10.4	N/A	N/A	N/A	N/A	N/A	N/A	N/A	N/A	N/A	2	6.8	2	N/A	9.3	2	9.3	2	43.8	13.0	47.1		13	0	
	Loc 3R	6.3	10.4	N/A	N/A	N/A	N/A	N/A	N/A	N/A	N/A	N/A	1.5	8.2	1.5	N/A	9.3	1.5	6.9	1.5	47.1	13.0	43.8		13	0	
	Former Singles	4.2	6.8	N/A	N/A	N/A	N/A	N/A	N/A	N/A	N/A	N/A	1.5	8.2	1.5	N/A	4.5	1.5	6.9	1.5	36.6						
	Loc 4	N/A	10.4	N/A	N/A	N/A	N/A	N/A	N/A	N/A	N/A	N/A	2	6.0	2	N/A	9.3	2	8.0	2	41.7	13.0	49.2		13	0	
19	Existing Lock	N/A	10.3	N/A	N/A	N/A	N/A	N/A	N/A	N/A	N/A	N/A	2	13.6	2	N/A	7.5	2	0.0	2	39.4	9.0			9	0	
	Loc 3	N/A	10.3	N/A	N/A	N/A	N/A	N/A	N/A	N/A	N/A	N/A	2	16.7	2	N/A	7.5	2	23.6	2	66.1	8.0	-26.7		8	0	
18	Existing Lock	3.9	6.4	6	2	3.6	2	14.3	2	3.3	2	8	2	3.6	2	14	6.7	2	2.0	2	87.8	9.2			7	4.9	3.5
	Loc 2	3.9	9.8	N/A	N/A	N/A	N/A	N/A	N/A	N/A	N/A	N/A	2	8.8	2	N/A	10.1	2	7.9	2	48.5	11.4	39.3		7	9	
	Former Singles	1.5	6.8	N/A	N/A	N/A	N/A	N/A	N/A	N/A	N/A	N/A	2	8.8	2	N/A	6	2	7.9	2	39.0						
	Loc 3	N/A	9.8	N/A	N/A	N/A	N/A	N/A	N/A	N/A	N/A	N/A	2	6.8	2	N/A	10.1	2	8.9	2	43.6	11.4	44.2		7	9	
	Loc 4	N/A	9.8	N/A	N/A	N/A	N/A	N/A	N/A	N/A	N/A	N/A	2	6.8	2	N/A	10.1	2	8.8	2	43.5	11.4	44.3		7	9	
17	Existing Lock	4.1	6.9	6	2	3.1	2	15.1	2	2.8	2	8	2	3.1	2	14	6.2	2	2.0	2	87.3	10.1			8	5.1	3.5
	Loc 1	4.1	10.3	N/A	N/A	N/A	N/A	N/A	N/A	N/A	N/A	N/A	2	8.7	2	N/A	9.6	2	9.9	2	50.6	7.0	36.7		7	0	
	Loc 2	4.1	10.3	N/A	N/A	N/A	N/A	N/A	N/A	N/A	N/A	N/A	2	7.7	2	N/A	9.6	2	6.0	2	45.7	7.0	41.6		7	0	
	Former Singles	2.8	6.8	N/A	N/A	N/A	N/A	N/A	N/A	N/A	N/A	N/A	2	7.7	2	N/A	6	2	6.0	2	37.3						
	Loc 3	N/A	10.3	N/A	N/A	N/A	N/A	N/A	N/A	N/A	N/A	N/A	2	5.7	2	N/A	9.6	2	7.0	2	40.6	7.0	46.7		7	0	
	Loc 4	N/A	10.3	N/A	N/A	N/A	N/A	N/A	N/A	N/A	N/A	N/A	2	5.4	2	N/A	9.6	2	7.4	2	40.7	7.0	46.6		7	0	
16	Existing Lock	2.9	6.9	6	2	4.0	2	14.4	2	3.8	2	8	2	4.0	2	14	5.4	2	2.0	2	87.4	10.0			8	4.9	3.5
	Loc 2	2.9	10.3	N/A	N/A	N/A	N/A	N/A	N/A	N/A	N/A	N/A	2	8.7	2	N/A	8.8	2	7.7	2	46.4	7.0	41.0		7	0	
	Former Singles	2.8	6.8	N/A	N/A	N/A	N/A	N/A	N/A	N/A	N/A	N/A	2	8.7	2	N/A	5.3	2	7.7	2	39.3						
	Loc 3	N/A	10.3	N/A	N/A	N/A	N/A	N/A	N/A	N/A	N/A	N/A	2	6.7	2	N/A	8.8	2	8.7	2	42.5	7.0	44.9		7	0	
	Loc 4	N/A	10.3	N/A	N/A	N/A	N/A	N/A	N/A	N/A	N/A	N/A	2	6.6	2	N/A	8.8	2	8.6	2	42.3	7.0	45.1		7	0	
15	Existing Lock	4.8	7.2	6	2	5.7	2	15.4	2	5.7	2	8	2	5.7	2	14	6.7	2	2.0	2	97.2	12.2			10	6	3.5
	Loc 2	4.8	10.6	N/A	N/A	N/A	N/A	N/A	N/A	N/A	N/A	N/A	2	10.8	2	N/A	10.1	2	11.0	2	55.3	9.0	41.9		9	0	
	Former Singles	4.4	6.8	N/A	N/A	N/A	N/A	N/A	N/A	N/A	N/A	N/A	2	10.8	2	N/A	6.4	2	11.0	2	47.4						
	Loc 3	N/A	10.6	N/A	N/A	N/A	N/A	N/A	N/A	N/A	N/A	N/A	2	10.1	2	N/A	10.1	2	14.2	2	53.0	9.0	44.2		9	0	
																										0	
14	Existing Lock	4.9	8.1	6	2	4.5	2	14.2	2	4.6	2	8	2	4.5	2	14	8.4	2	2.0	2	95.2	10.6			9	4.3	3.5
	Loc 2	4.9	11.5	N/A	N/A	N/A	N/A	N/A	N/A	N/A	N/A	N/A	2	9.8	2	N/A	11.8	2	9.5	2	55.5	8.0	39.7		8	0	
	Former Singles	2.5	6.8	N/A	N/A	N/A	N/A	N/A	N/A	N/A	N/A	N/A	2	9.8	2	N/A	5.2	2	9.5	2	41.8						
	Loc 4	N/A	11.5	N/A	N/A	N/A	N/A	N/A	N/A	N/A	N/A	N/A	2	8.9	2	N/A	11.8	2	10.7	2	50.9	8.0	44.3		8	0	
13	Existing Lock	3	5.6	6	2	4.2	2	13.1	2	4.1	2	8	2	4.2	2	14	4.8	2	2.0	2	85.0	8.3			6	4.6	3.5
	Loc 2	3	9	N/A	N/A	N/A	N/A	N/A	N/A	N/A	N/A	N/A	2	9.4	2	N/A	8.2	2	8.9	2	46.5	6.0	38.5		6	0	
	Former Singles		6.8	N/A	N/A	N/A	N/A	N/A	N/A	N/A	N/A	N/A															
	Loc 3	N/A	9	N/A	N/A	N/A	N/A	N/A	N/A	N/A	N/A	N/A	2	7.4	2	N/A	8.2	2	9.9	2	42.5	6.0	42.5		6	0	
	Loc 4	N/A	9	N/A	N/A	N/A	N/A	N/A	N/A	N/A	N/A	N/A	2	7.5	2	N/A	8.2	2	9.5	2	42.2	6.0	42.8		6	0	
12	Existing Lock	5.2	6.5	6	2	3.9	2	12.2	2	4.1	2	8	2	3.9	2	14	3.7	2	2.0	2	85.5	7.9			6	3.8	3.5
	Loc 2	5.2	9.9	N/A	N/A	N/A	N/A	N/A	N/A	N/A	N/A	N/A	2	8.5	2	N/A	7.1	2	7.4	2	46.1	6.0	39.4		6	0	
	Loc 3	N/A	9.9	N/A	N/A	N/A	N/A	N/A	N/A	N/A	N/A	N/A	2	6.5	2	N/A	7.1	2	8.4	2	39.9	6.0	45.6		6	0	
	Loc 4	N/A	9.9	N/A	N/A	N/A	N/A	N/A	N/A	N/A	N/A	N/A	2	6.4	2	N/A	7.1	2	8.4	2	39.8	6.0	45.7		6	0	
11	Existing Lock	4.8	6.7	6	2	5.1	2	16.7	2	5.3	2	8	2	5.1	2	14	5.9	2	2.0	2	95.7	11.8			8	8	3.5
	Loc 2	4.8	10.1	N/A	N/A	N/A	N/A	N/A	N/A	N/A	N/A	N/A	2	9.7	2	N/A	9.3	2	9.3	2	51.2	8.0	44.5		8	0	
	Loc 3	N/A	10.1	N/A	N/A	N/A	N/A	N/A	N/A	N/A	N/A	N/A	2	7.7	2	N/A	9.3	2	10.3	2	45.4	8.0	50.3		8	0	
																					Average Time Difference (Min.) =		40.7				

Notes:

Columns 4 and 5 are reported in LPMS data for existing locks as a single value called "Chamber Entry". The values shown here for Chamber Entry are those from LPMS minus the estimated time of 6 min. for uncoupling which is included as Column 5.

Columns 6, 7, and 8 are reported in LPMS data for existing locks as a single value called "Chambering Time". The sum of the steps reported here equals those chambering times.

Columns 17 and 18 are reported in LPMS data for existing locks as a single value called "Exit - Fly, Exch, or Trnbk". The values shown here for Exit are those from LPMS minus the estimated time of 14 min. for recoupling which is included as Column 17.

For many of the steps the standard deviations were not known. Therefore the overall standard deviations (Column 27) is under-represented, especially for the Existing Locks (which have more steps).

Some of the items were not specifically studied. This was generally because there's no good way of estimating the time changes and because refining those steps would make little difference in the total lockage time.

Chamber Entry times (Column 4) and Exit times(Column 20) where estimated by using the entry/exit of a double plus 3.4 minutes. The 3.4 minutes is the additional time required to move the extra 600 feet of tow (moving 2mph) over the sill.

Performance Comparison of Without-Project versus with600' Locks
DOWNBOUNDLOCKAGE STEPS WITH FLY APPROACH AND EXIT

Lock Site	Lock Alternative	1 Approach (Fly)	4 Chamber Entry	5 Uncoup-ling (and backing 2nd cut out of chamber)	6 Gate Operation	7 Emptying the Chamber	8 Gate Operation	9 Extract First Cut	10 Gate Operation	11 Filling the Chamber	12 Gate Operation	13 2nd cut entry	14 Gate Operation	15 Emptying the Chamber	16 Gate Operation	17 Tow Remake	18 Exit (Fly)	21 Gate Operation	22 Filling the Chamber	23 Gate Operation	24 Total Lockage Time (min.) Fly	27 Standard Deviation	28 Time Savings on Doubles (Fly)	31	32 Standard Deviation (from Approach only)	33 Standard Deviation (from Extracting 1st cut only)	34 Standard Deviation (from Remake only)
L.G.	Existing Lock	20	10.2	6	2	3.2	2	15.6	2	3.0	2	8	2	3.2	2	14	11.4	N/A	N/A	N/A	106.6	13.1			11	6.2	3.5
	Loc 1	14	10.2	6	2	4.4	2	15.6	2	4.1	2	8	2	4.4	2	14	11.4	N/A	N/A	N/A	104.1	10.7	2.5		8	6.2	3.5
	Loc 2	N/A	N/A	N/A	N/A	N/A	N/A	N/A	N/A	N/A	N/A	N/A	N/A	N/A	N/A	N/A	N/A	N/A	N/A	N/A	N/A	N/A	N/A		N/A	N/A	
Peo.	Existing Lock	19	11.6	6	2	4.4	2	14.5	2	4.0	2	8	2	4.4	2	14	13.8	N/A	N/A	N/A	111.7	12.0			10	5.7	3.5
	Loc 1	16	11.6	6	2	6.1	2	14.5	2	5.5	2	8	2	6.1	2	14	13.8	N/A	N/A	N/A	113.6	11.2	-1.9		9	5.7	3.5
	Loc 2	N/A	N/A	N/A	N/A	N/A	N/A	N/A	N/A	N/A	N/A	N/A	N/A	N/A	N/A	N/A	N/A	N/A	N/A	N/A	N/A	N/A	N/A		N/A	N/A	
25	Existing Lock	24	7.4	6	2	4.9	2	18.1	2	5.0	2	8	2	6.0	2	14	8.3	N/A	N/A	N/A	113.7	14.4			13	5.0	3.5
	Loc 1	16	7.4	6	2	7.7	2	18.1	2	7.4	2	8	2	8.8	2	14	8.3	N/A	N/A	N/A	113.7	10.1	0.0		8	5.0	3.5
	Loc 2	N/A	N/A	N/A	N/A	N/A	N/A	N/A	N/A	N/A	N/A	N/A	N/A	N/A	N/A	N/A	N/A	N/A	N/A	N/A	N/A	N/A	N/A		N/A	N/A	
	Loc 3	16	7.4	6	2	4.9	2	18.1	2	5.0	2	8	2	7.1	2	14	8.3	N/A	N/A	N/A	106.8	10.1	6.9		8	5.0	3.5
	Loc 4	16	7.4	6	2	4.9	2	18.1	2	5.0	2	8	2	6.0	2	14	8.3	N/A	N/A	N/A	105.7	10.1	8.0		8	5.0	3.5
24	Existing Lock	22	8.2	6	2	5.0	2	20.4	2	6.2	2	8	2	6.6	2	14	9.8	N/A	N/A	N/A	118.2	13.2			12	4.1	3.5
	Loc 2	N/A	N/A	N/A	N/A	N/A	N/A	N/A	N/A	N/A	N/A	N/A	N/A	N/A	N/A	N/A	N/A	N/A	N/A	N/A	N/A	N/A	N/A		N/A	N/A	
	Loc 3	15	8.2	6	2	5.0	2	20.4	2	6.2	2	8	2	6.6	2	14	9.8	N/A	N/A	N/A	111.2	9.6	7.0		8	4.1	3.5
	Loc 4	15	8.2	6	2	5.0	2	20.4	2	6.2	2	8	2	6.6	2	14	9.8	N/A	N/A	N/A	111.2	9.6	7.0		8	4.1	3.5
22	Existing Lock	50	9.1	6	2	2.8	2	18.4	2	3.0	2	8	2	3.3	2	14	15.9	N/A	N/A	N/A	142.5	18.5			16	8.5	3.5
	Loc 2	N/A	N/A	N/A	N/A	N/A	N/A	N/A	N/A	N/A	N/A	N/A	N/A	N/A	N/A	N/A	N/A	N/A	N/A	N/A	N/A	N/A	N/A		N/A	N/A	
	Loc 3	32	9.1	6	2	2.8	2	18.4	2	3.0	2	8	2	3.3	2	14	15.9	N/A	N/A	N/A	124.5	13.6	18.0		10	8.5	3.5
	Loc 4	32	9.1	6	2	2.8	2	18.4	2	3.0	2	8	2	3.3	2	14	15.9	N/A	N/A	N/A	124.5	13.6	18.0		10	8.5	3.5
21	Existing Lock	33	8.0	6	2	2.3	2	16.8	2	2.2	2	8	2	2.4	2	14	10.3	N/A	N/A	N/A	115.0	15.2			14	4.8	3.5
	Loc 2	N/A	N/A	N/A	N/A	N/A	N/A	N/A	N/A	N/A	N/A	N/A	N/A	N/A	N/A	N/A	N/A	N/A	N/A	N/A	N/A	N/A	N/A		N/A	N/A	
	Loc 3	23	8.0	6	2	2.3	2	16.8	2	2.2	2	8	2	2.4	2	14	10.3	N/A	N/A	N/A	105.0	11.6	10.0		10	4.8	3.5
	Loc 4	23	8.0	6	2	2.3	2	16.8	2	2.2	2	8	2	2.4	2	14	10.3	N/A	N/A	N/A	105.0	11.6	10.0		10	4.8	3.5
20	Existing Lock	32	8.6	6	2	3.7	2	16.9	2	3.8	2	8	2	4.1	2	14	10.8	N/A	N/A	N/A	119.9	16.2			15	5.1	3.5
	Loc 2	N/A	N/A	N/A	N/A	N/A	N/A	N/A	N/A	N/A	N/A	N/A	N/A	N/A	N/A	N/A	N/A	N/A	N/A	N/A	N/A	N/A	N/A		N/A	N/A	
	Loc 3	21	8.6	6	2	3.7	2	16.9	2	3.8	2	8	2	4.1	2	14	10.8	N/A	N/A	N/A	108.9	11.8	11.0		10	5.1	3.5
	Loc 4	21	8.6	6	2	3.7	2	16.9	2	3.8	2	8	2	4.1	2	14	10.8	N/A	N/A	N/A	108.9	11.8	11.0		10	5.1	3.5
19	Existing Lock	18	10.9	N/A	N/A	N/A	N/A	N/A	N/A	N/A	N/A	N/A	2	20.0	2	N/A	13.4	N/A	N/A	N/A	66.3	14.0			14	0	
	No 600' Alts.	N/A	N/A	N/A	N/A	N/A	N/A	N/A	N/A	N/A	N/A	N/A	N/A	N/A	N/A	N/A	N/A	N/A	N/A	N/A	N/A	N/A	N/A		N/A	N/A	
18	Existing Lock	32	8.0	6	2	3.3	2	17.4	2	3.6	2	8	2	3.6	2	14	10.0	N/A	N/A	N/A	117.9	15.0			14	4.2	3.5
	Loc 2	N/A	N/A	N/A	N/A	N/A	N/A	N/A	N/A	N/A	N/A	N/A	N/A	N/A	N/A	N/A	N/A	N/A	N/A	N/A	N/A	N/A	N/A		N/A	N/A	
	Loc 3	28	8.0	6	2	3.3	2	17.4	2	3.6	2	8	2	3.6	2	14	10.0	N/A	N/A	N/A	113.9	13.2	4.0		12	4.2	3.5
	Loc 4	22	8.0	6	2	3.3	2	17.4	2	3.6	2	8	2	3.6	2	14	10.0	N/A	N/A	N/A	107.9	11.4	10.0		10	4.2	3.5
17	Existing Lock	40	8.9	6	2	2.8	2	19.5	2	3.1	2	8	2	2.8	2	14	13.3	N/A	N/A	N/A	130.4	16.1			15	4.7	3.5
	Loc 1	27	8.9	6	2	4.2	2	19.5	2	3.8	2	8	2	4.2	2	14	13.3	N/A	N/A	N/A	120.9	11.6	9.5		10	4.7	3.5
	Loc 2	N/A	N/A	N/A	N/A	N/A	N/A	N/A	N/A	N/A	N/A	N/A	N/A	N/A	N/A	N/A	N/A	N/A	N/A	N/A	N/A	N/A	N/A		N/A	N/A	
	Loc 3	27	8.9	6	2	2.8	2	19.5	2	3.1	2	8	2	2.8	2	14	13.3	N/A	N/A	N/A	117.4	11.6	13.0		10	4.7	3.5
	Loc 4	27	8.9	6	2	2.8	2	19.5	2	3.1	2	8	2	2.8	2	14	13.3	N/A	N/A	N/A	117.4	11.6	13.0		10	4.7	3.5
16	Existing Lock	32	8.3	6	2	3.8	2	16.0	2	4.0	2	8	2	4.2	2	14	12.5	N/A	N/A	N/A	120.8	16.2			15	5.1	3.5
	Loc 2	N/A	N/A	N/A	N/A	N/A	N/A	N/A	N/A	N/A	N/A	N/A	N/A	N/A	N/A	N/A	N/A	N/A	N/A	N/A	N/A	N/A	N/A		N/A	N/A	
	Loc 3	21	8.3	6	2	3.8	2	16.0	2	4.0	2	8	2	4.2	2	14	12.5	N/A	N/A	N/A	109.8	11.8	11.0		10	5.1	3.5
	Loc 4	21	8.3	6	2	3.8	2	16.0	2	4.0	2	8	2	4.2	2	14	12.5	N/A	N/A	N/A	109.8	11.8	11.0		10	5.1	3.5
15	Existing Lock	24	8.3	6	2	5.7	2	12.9	2	5.7	2	8	2	8.1	2	14	13.6	N/A	N/A	N/A	118.3	15.6			15	2.6	3.5
	Loc 2	N/A	N/A	N/A	N/A	N/A	N/A	N/A	N/A	N/A	N/A	N/A	N/A	N/A	N/A	N/A	N/A	N/A	N/A	N/A	N/A	N/A	N/A		N/A	N/A	
	Loc 3	16	8.3	6	2	5.7	2	12.9	2	5.7	2	8	2	8.1	2	14	13.6	N/A	N/A	N/A	110.3	10.9	8.0		10	2.6	3.5
14	Existing Lock	24	8.7	6	2	4.6	2	15.1	2	4.5	2	8	2	4.7	2	14	13.6	N/A	N/A	N/A	115.2	13.2			12	4.1	3.5
	Loc 2	N/A	N/A	N/A	N/A	N/A	N/A	N/A	N/A	N/A	N/A	N/A	N/A	N/A	N/A	N/A	N/A	N/A	N/A	N/A	N/A	N/A	N/A		N/A	N/A	
	Loc 4	19	8.7	6	2	4.6	2	15.1	2	4.5	2	8	2	4.7	2	14	13.6	N/A	N/A	N/A	110.2	11.4	5.0		10	4.1	3.5
13	Existing Lock	18	6.8	6	2	4.1	2	15.6	2	4.2	2	8	2	4.2	2	14	7.3	N/A	N/A	N/A	100.2	9.7			8	4.3	3.5
	Loc 2	N/A	N/A	N/A	N/A	N/A	N/A	N/A	N/A	N/A	N/A	N/A	N/A	N/A	N/A	N/A	N/A	N/A	N/A	N/A	N/A	N/A	N/A		N/A	N/A	
	Loc 3	18	6.8	6	2	4.1	2	15.6	2	4.2	2	8	2	4.2	2	14	7.3	N/A	N/A	N/A	100.2	9.7	0.0		8	4.3	3.5
	Loc 4	18	6.8	6	2	4.1	2	15.6	2	4.2	2	8	2	4.2	2	14	7.3	N/A	N/A	N/A	100.2	9.7	0.0		8	4.3	3.5
12	Existing Lock	20	7.8	6	2	4.1	2	16.0	2	3.9	2	8	2	4.2	2	14	9.3	N/A	N/A	N/A	105.3	11.2			10	3.7	3.5
	Loc 2	N/A	N/A	N/A	N/A	N/A	N/A	N/A	N/A	N/A	N/A	N/A	N/A	N/A	N/A	N/A	N/A	N/A	N/A	N/A	N/A	N/A	N/A		N/A	N/A	
	Loc 3	14	7.8	6	2	4.1	2	16.0	2	3.9	2	8	2	4.2	2	14	9.3	N/A	N/A	N/A	99.3	8.7	6.0		7	3.7	3.5
	Loc 4	14	7.8	6	2	4.1	2	16.0	2	3.9	2	8	2	4.2	2	14	9.3	N/A	N/A	N/A	99.3	8.7	6.0		7	3.7	3.5
11	Existing Lock	28	8.1	6	2	5.3	2	17.5	2	5.1	2	8	2	5.4	2	14	8.3	N/A	N/A	N/A	117.7	13.3			12	4.5	3.5
	Loc 2	N/A	N/A	N/A	N/A	N/A	N/A	N/A	N/A	N/A	N/A	N/A	N/A	N/A	N/A	N/A	N/A	N/A	N/A	N/A	N/A	N/A	N/A		N/A	N/A	
	Loc 3	19	8.1	6	2	5.3	2	17.5	2	5.1	2	8	2	5.4	2	14	8.3	N/A	N/A	N/A	108.7	9.8	9.0		8	4.5	3.5
																					Average Time Difference (Min.) =		7.9				

Notes:

Columns 4 and 5 are reported in LPMS data for existing locks as a single value called "Chamber Entry". The values shown here for Chamber Entry are those from LPMS minus the estimated time of 6 min. for uncoupling which is included as Column 5.

Columns 6, 7, and 8 are reported in LPMS data for existing locks as a single value called "Chambering Time". The sum of the steps reported here equals those chambering times.

Columns 17 and 18 are reported in LPMS data for existing locks as a single value called "Exit - Fly, Exch, or Trnbk". The values shown here for Exit are those from LPMS minus the estimated time of 14 min. for recoupling which is included as Column 17.

For many of the steps the standard deviations were not known. Therefore the overall standard deviations (Column 27) is under-represented, especially for the Existing Locks (which have more steps).

Some of the items were not specifically studied. This was generally because there's no good way of estimating the time changes and because refining those steps would make little difference in the total lockage time.

Totals & Averages From 12/30/98																							
	Existing	27.9	8.5	6.0	2.0	4.0	2.0	16.7	2.0	4.1	2.0	8.0	2.0	4.5	2.0	14.0	11.2	#VALUE!	#VALUE!	#VALUE!	116.9	14.2	0.0
	Loc 1	18.3	9.5	6.0	2.0	5.6	2.0	16.9	2.0	5.2	2.0	8.0	2.0	5.9	2.0	14.0	11.7	#VALUE!	#VALUE!	#VALUE!	113.1	10.9	2.5
	Loc 2	#VALUE!	#VALUE!	#VALUE!	#VALUE!	#VALUE!	#VALUE!	#VALUE!	#VALUE!	#VALUE!	#VALUE!	#VALUE!	#VALUE!	#VALUE!	#VALUE!	#VALUE!	#VALUE!	#VALUE!	#VALUE!	#VALUE!	#VALUE!	#VALUE!	#VALUE!
	Loc 3	20.8	8.1	6.0	2.0	4.0	2.0	17.1	2.0	4.2	2.0	8.0	2.0	4.7	2.0	14.0	10.8	#VALUE!	#VALUE!	#VALUE!	109.7	11.0	8.7
	Loc 4	20.7	8.2	6.0	2.0	3.8	2.0	17.3	2.0	4.0	2.0	8.0	2.0	4.2	2.0	14.0	11.0	#VALUE!	#VALUE!	#VALUE!	109.1	11.0	9.0
		Savings																					
	Existing																						
	Loc 1	9.6	-1.0	0.0	0.0	-1.6	0.0	-0.2	0.0	-1.1	0.0	0.0	0.0	-1.4	0.0	0.0	-0.5	#VALUE!	#VALUE!	#VALUE!	3.8	3.3	-2.5
	Loc 2	#VALUE!	#VALUE!	#VALUE!	#VALUE!	#VALUE!	#VALUE!	#VALUE!	#VALUE!	#VALUE!	#VALUE!	#VALUE!	#VALUE!	#VALUE!	#VALUE!	#VALUE!	#VALUE!	#VALUE!	#VALUE!	#VALUE!	#VALUE!	#VALUE!	#VALUE!
	Loc 3	7.0	0.4	0.0	0.0	0.0	0.0	-0.4	0.0	-0.1	0.0	0.0	0.0	-0.2	0.0	0.0	0.4	#VALUE!	#VALUE!	#VALUE!	7.2	3.2	-8.7
	Loc 4	7.1	0.4	0.0	0.0	0.2	0.0	-0.6	0.0	0.1	0.0	0.0	0.0	0.3	0.0	0.0	0.2	#VALUE!	#VALUE!	#VALUE!	7.8	3.2	-9.0

Performance Comparison of Without-Project versus with 600' Locks

DOWNBOUND LOCKAGE STEPS WITH EXCHANGE APPROACH AND EXIT

		2	4	5	6	7	8	9	10	11	12	13	14	15	16	17	19	21	22	23	25	27	29	31	32	33	34
Lock Site	Lock Alternative	Approach (Exchange)	Chamber Entry	Uncoup-ling (and backing 2nd cut out of chamber)	Gate Operation	Emptying the Chamber	Gate Operation	Extract First Cut	Gate Operation	Filling the Chamber	Gate Operation	2nd cut entry	Gate Operation	Emptying the Chamber	Gate Operation	Tow Remake	Exit (Exchange)	Gate Operation	Filling the Chamber	Gate Operation	Total Lockage Time (min.) Exchange	Standard Deviation	Time Savings on Doubles (Exchange)		Standard Deviation (from Approach only)	Standard Deviation (from Extracting 1st cut only)	Standard Deviation (from Remake only)
L.G.	Existing Lock	23	10.2	6	2	3.2	2	15.6	2	3.0	2	8	2	3.2	2	14	23.7	N/A	N/A	N/A	121.9	13.1			11	6.2	3.5
	Loc 1	16	10.2	6	2	4.4	2	15.6	2	4.1	2	8	2	4.4	2	14	23.7	N/A	N/A	N/A	118.5	10.7	3.4		8	6.2	3.5
	Loc 2	N/A	N/A	N/A	N/A	N/A	N/A	N/A	N/A	N/A	N/A	N/A	N/A	N/A	N/A	N/A	N/A	N/A	N/A	N/A	N/A	N/A	N/A		N/A	N/A	
Peo.	Existing Lock	19	11.6	6	2	4.4	2	14.5	2	4.0	2	8	2	4.4	2	14	21.1	N/A	N/A	N/A	119.0	12.0			10	5.7	3.5
	Loc 1	16	11.6	6	2	6.1	2	14.5	2	5.5	2	8	2	6.1	2	14	21.1	N/A	N/A	N/A	120.9	11.2	-1.9		9	5.7	3.5
	Loc 2	N/A	N/A	N/A	N/A	N/A	N/A	N/A	N/A	N/A	N/A	N/A	N/A	N/A	N/A	N/A	N/A	N/A	N/A	N/A	N/A	N/A	N/A		N/A	N/A	
25	Existing Lock	19	7.4	6	2	4.9	2	18.1	2	5.0	2	8	2	6.0	2	14	9.1	N/A	N/A	N/A	109.5	14.4			13	5.0	3.5
	Loc 1	13	7.4	6	2	7.7	2	18.1	2	7.4	2	8	2	8.8	2	14	9.1	N/A	N/A	N/A	111.2	10.1	-1.7		8	5.0	3.5
	Loc 2	N/A	N/A	N/A	N/A	N/A	N/A	N/A	N/A	N/A	N/A	N/A	N/A	N/A	N/A	N/A	N/A	N/A	N/A	N/A	N/A	N/A	N/A		N/A	N/A	
	Loc 3	13	7.4	6	2	4.9	2	18.1	2	5.0	2	8	2	7.1	2	14	9.1	N/A	N/A	N/A	104.3	10.1	5.2		8	5.0	3.5
	Loc 4	13	7.4	6	2	4.9	2	18.1	2	5.0	2	8	2	6.0	2	14	9.1	N/A	N/A	N/A	103.2	10.1	6.3		8	5.0	3.5
24	Existing Lock	23	8.2	6	2	5.0	2	20.4	2	6.2	2	8	2	6.6	2	14	13.2	N/A	N/A	N/A	122.6	13.2			12	4.1	3.5
	Loc 2	N/A	N/A	N/A	N/A	N/A	N/A	N/A	N/A	N/A	N/A	N/A	N/A	N/A	N/A	N/A	N/A	N/A	N/A	N/A	N/A	N/A	N/A		N/A	N/A	
	Loc 3	16	8.2	6	2	5.0	2	20.4	2	6.2	2	8	2	6.6	2	14	13.2	N/A	N/A	N/A	115.3	9.6	7.3		8	4.1	3.5
	Loc 4	16	8.2	6	2	5.0	2	20.4	2	6.2	2	8	2	6.6	2	14	13.2	N/A	N/A	N/A	115.3	9.6	7.3		8	4.1	3.5
22	Existing Lock	28	9.1	6	2	2.8	2	18.4	2	3.0	2	8	2	3.3	2	14	16.8	N/A	N/A	N/A	121.4	18.5			16	8.5	3.5
	Loc 2	N/A	N/A	N/A	N/A	N/A	N/A	N/A	N/A	N/A	N/A	N/A	N/A	N/A	N/A	N/A	N/A	N/A	N/A	N/A	N/A	N/A	N/A		N/A	N/A	
	Loc 3	18	9.1	6	2	2.8	2	18.4	2	3.0	2	8	2	3.3	2	14	16.8	N/A	N/A	N/A	111.3	13.6	10.1		10	8.5	3.5
	Loc 4	18	9.1	6	2	2.8	2	18.4	2	3.0	2	8	2	3.3	2	14	16.8	N/A	N/A	N/A	111.3	13.6	10.1		10	8.5	3.5
21	Existing Lock	23	8.0	6	2	2.3	2	16.8	2	2.2	2	8	2	2.4	2	14	12.8	N/A	N/A	N/A	107.5	15.2			14	4.8	3.5
	Loc 2	N/A	N/A	N/A	N/A	N/A	N/A	N/A	N/A	N/A	N/A	N/A	N/A	N/A	N/A	N/A	N/A	N/A	N/A	N/A	N/A	N/A	N/A		N/A	N/A	
	Loc 3	16	8.0	6	2	2.3	2	16.8	2	2.2	2	8	2	2.4	2	14	12.8	N/A	N/A	N/A	100.5	11.6	7.0		10	4.8	3.5
	Loc 4	16	8.0	6	2	2.3	2	16.8	2	2.2	2	8	2	2.4	2	14	12.8	N/A	N/A	N/A	100.5	11.6	7.0		10	4.8	3.5
20	Existing Lock	18	8.6	6	2	3.7	2	16.9	2	3.8	2	8	2	4.1	2	14	17.8	N/A	N/A	N/A	112.9	16.2			15	5.1	3.5
	Loc 2	N/A	N/A	N/A	N/A	N/A	N/A	N/A	N/A	N/A	N/A	N/A	N/A	N/A	N/A	N/A	N/A	N/A	N/A	N/A	N/A	N/A	N/A		N/A	N/A	
	Loc 3	12	8.6	6	2	3.7	2	16.9	2	3.8	2	8	2	4.1	2	14	17.8	N/A	N/A	N/A	106.7	11.8	6.2		10	5.1	3.5
	Loc 4	12	8.6	6	2	3.7	2	16.9	2	3.8	2	8	2	4.1	2	14	17.8	N/A	N/A	N/A	106.7	11.8	6.2		10	5.1	3.5
19	Existing Lock	25	10.9	N/A	N/A	N/A	N/A	N/A	N/A	N/A	N/A	N/A	2	20.0	2	N/A	15.6	N/A	N/A	N/A	75.5	14.0			14	0	
	No 600' Alts.	N/A	N/A	N/A	N/A	N/A	N/A	N/A	N/A	N/A	N/A	N/A	N/A	N/A	N/A	N/A	N/A	N/A	N/A	N/A	N/A	N/A	N/A		N/A	N/A	
18	Existing Lock	21	8.0	6	2	3.3	2	17.4	2	3.6	2	8	2	3.6	2	14	10.8	N/A	N/A	N/A	107.7	15.0			14	4.2	3.5
	Loc 2	N/A	N/A	N/A	N/A	N/A	N/A	N/A	N/A	N/A	N/A	N/A	N/A	N/A	N/A	N/A	N/A	N/A	N/A	N/A	N/A	N/A	N/A		N/A	N/A	
	Loc 3	18	8.0	6	2	3.3	2	17.4	2	3.6	2	8	2	3.6	2	14	10.8	N/A	N/A	N/A	105.1	13.2	2.6		12	4.2	3.5
	Loc 4	14	8.0	6	2	3.3	2	17.4	2	3.6	2	8	2	3.6	2	14	10.8	N/A	N/A	N/A	101.1	11.4	6.6		10	4.2	3.5
17	Existing Lock	33	8.9	6	2	2.8	2	19.5	2	3.1	2	8	2	2.8	2	14	15.3	N/A	N/A	N/A	125.4	16.1			15	4.7	3.5
	Loc 1	22	8.9	6	2	4.2	2	19.5	2	3.8	2	8	2	4.2	2	14	15.3	N/A	N/A	N/A	118.2	11.6	7.2		10	4.7	3.5
	Loc 2	N/A	N/A	N/A	N/A	N/A	N/A	N/A	N/A	N/A	N/A	N/A	N/A	N/A	N/A	N/A	N/A	N/A	N/A	N/A	N/A	N/A	N/A		N/A	N/A	
	Loc 3	22	8.9	6	2	2.8	2	19.5	2	3.1	2	8	2	2.8	2	14	15.3	N/A	N/A	N/A	114.7	11.6	10.7		10	4.7	3.5
	Loc 4	22	8.9	6	2	2.8	2	19.5	2	3.1	2	8	2	2.8	2	14	15.3	N/A	N/A	N/A	114.7	11.6	10.7		10	4.7	3.5
16	Existing Lock	22	8.3	6	2	3.8	2	16.0	2	4.0	2	8	2	4.2	2	14	10.8	N/A	N/A	N/A	109.1	16.2			15	5.1	3.5
	Loc 2	N/A	N/A	N/A	N/A	N/A	N/A	N/A	N/A	N/A	N/A	N/A	N/A	N/A	N/A	N/A	N/A	N/A	N/A	N/A	N/A	N/A	N/A		N/A	N/A	
	Loc 3	14	8.3	6	2	3.8	2	16.0	2	4.0	2	8	2	4.2	2	14	10.8	N/A	N/A	N/A	101.5	11.8	7.6		10	5.1	3.5
	Loc 4	14	8.3	6	2	3.8	2	16.0	2	4.0	2	8	2	4.2	2	14	10.8	N/A	N/A	N/A	101.5	11.8	7.6		10	5.1	3.5
15	Existing Lock	31	8.3	6	2	5.7	2	12.9	2	5.7	2	8	2	8.1	2	14	18.6	N/A	N/A	N/A	130.3	15.6			15	2.6	3.5
	Loc 2	N/A	N/A	N/A	N/A	N/A	N/A	N/A	N/A	N/A	N/A	N/A	N/A	N/A	N/A	N/A	N/A	N/A	N/A	N/A	N/A	N/A	N/A		N/A	N/A	
	Loc 3	21	8.3	6	2	5.7	2	12.9	2	5.7	2	8	2	8.1	2	14	18.6	N/A	N/A	N/A	120.0	10.9	10.3		10	2.6	3.5
14	Existing Lock	17	8.7	6	2	4.6	2	15.1	2	4.5	2	8	2	4.7	2	14	21.7	N/A	N/A	N/A	116.3	13.2			12	4.1	3.5
	Loc 2	N/A	N/A	N/A	N/A	N/A	N/A	N/A	N/A	N/A	N/A	N/A	N/A	N/A	N/A	N/A	N/A	N/A	N/A	N/A	N/A	N/A	N/A		N/A	N/A	
	Loc 4	13	8.7	6	2	4.6	2	15.1	2	4.5	2	8	2	4.7	2	14	21.7	N/A	N/A	N/A	112.8	11.4	3.5		10	4.1	3.5
13	Existing Lock	16	6.8	6	2	4.1	2	15.6	2	4.2	2	8	2	4.2	2	14	10.6	N/A	N/A	N/A	101.5	9.7			8	4.3	3.5
	Loc 2	N/A	N/A	N/A	N/A	N/A	N/A	N/A	N/A	N/A	N/A	N/A	N/A	N/A	N/A	N/A	N/A	N/A	N/A	N/A	N/A	N/A	N/A		N/A	N/A	
	Loc 3	16	6.8	6	2	4.1	2	15.6	2	4.2	2	8	2	4.2	2	14	10.6	N/A	N/A	N/A	101.5	9.7	0.0		8	4.3	3.5
	Loc 4	16	6.8	6	2	4.1	2	15.6	2	4.2	2	8	2	4.2	2	14	10.6	N/A	N/A	N/A	101.5	9.7	0.0		8	4.3	3.5
12	Existing Lock	18	7.8	6	2	4.1	2	16.0	2	3.9	2	8	2	4.2	2	14	15.2	N/A	N/A	N/A	109.2	11.2			10	3.7	3.5
	Loc 2	N/A	N/A	N/A	N/A	N/A	N/A	N/A	N/A	N/A	N/A	N/A	N/A	N/A	N/A	N/A	N/A	N/A	N/A	N/A	N/A	N/A	N/A		N/A	N/A	
	Loc 3	13	7.8	6	2	4.1	2	16.0	2	3.9	2	8	2	4.2	2	14	15.2	N/A	N/A	N/A	103.8	8.7	5.4		7	3.7	3.5
	Loc 4	13	7.8	6	2	4.1	2	16.0	2	3.9	2	8	2	4.2	2	14	15.2	N/A	N/A	N/A	103.8	8.7	5.4		7	3.7	3.5
11	Existing Lock	16	8.1	6	2	5.3	2	17.5	2	5.1	2	8	2	5.4	2	14	7.7	N/A	N/A	N/A	105.1	13.3			12	4.5	3.5
	Loc 2	N/A	N/A	N/A	N/A	N/A	N/A	N/A	N/A	N/A	N/A	N/A	N/A	N/A	N/A	N/A	N/A	N/A	N/A	N/A	N/A	N/A	N/A		N/A	N/A	
	Loc 3	11	8.1	6	2	5.3	2	17.5	2	5.1	2	8	2	5.4	2	14	7.7	N/A	N/A	N/A	100.0	9.8	5.1		8	4.5	3.5
																					Average Time Difference (Min.) =		5.8				

Notes:

Columns 4 and 5 are reported in LPMS data for existing locks as a single value called "Chamber Entry". The values shown here for Chamber Entry are those from LPMS minus the estimated time of 6 min. for uncoupling which is included as Column 5.

Columns 6, 7, and 8 are reported in LPMS data for existing locks as a single value called "Chambering Time". The sum of the steps reported here equals those chambering times.

Columns 17 and 18 are reported in LPMS data for existing locks as a single value called "Exit - Fly, Exch, or Trnbk". The values shown here for Exit are those from LPMS minus the estimated time of 14 min. for recoupling which is included as Column 17.

For many of the steps the standard deviations were not known. Therefore the overall standard deviations (Column 27) is under-represented, especially for the Existing Locks (which have more steps).

Some of the items were not specifically studied. This was generally because there's no good way of estimating the time changes and because refining those steps would make little difference in the total lockage time.

Performance Comparison of Without-Project versus with 600' Locks

DOWNBOUND LOCKAGE STEPS WITH TURNBACK APPROACH AND EXIT

		3	4	5	6	7	8	9	10	11	12	13	14	15	16	17	20	21	22	23	26	27	30	31	32	33	34
Lock Site	Lock Alternative	Approach (Turnback)	Chamber Entry	Uncoup-ling (and backing 2nd cut out of chamber)	Gate Operation	Emptying the Chamber	Gate Operation	Extract First Cut	Gate Operation	Filling the Chamber	Gate Operation	2nd cut entry	Gate Operation	Emptying the Chamber	Gate Operation	Tow Remake	Exit (Turnback)	Gate Operation	Filling the Chamber	Gate Operation	Total Lockage Time (min.) Turnback	Standard Deviation	Time Savings on Doubles (Turnback)		Standard Deviation (from Approach only)	Standard Deviation (from Extracting 1st cut only)	Standard Deviation (from Remake only)
L.G.	Existing Lock	N/A	10.2	6	2	3.2	2	15.6	2	3.0	2	8	2	3.2	2	14	9.3	2	3.0	2	91.5	13.1			11	6.2	3.5
	Loc 1	N/A	10.2	6	2	4.4	2	15.6	2	4.1	2	8	2	4.4	2	14	9.3	2	4.1	2	96.1	10.7	-4.6		8	6.2	3.5
	Loc 2	N/A	N/A	N/A	N/A	N/A	N/A	N/A	N/A	N/A	N/A	N/A	N/A	N/A	N/A	N/A	N/A	N/A	N/A	N/A	N/A	N/A	N/A		N/A	N/A	
Peo.	Existing Lock	N/A	11.6	6	2	4.4	2	14.5	2	4.0	2	8	2	4.4	2	14	13.2	2	4.0	2	100.1	12.0			10	5.7	3.5
	Loc 1	N/A	11.6	6	2	6.1	2	14.5	2	5.5	2	8	2	6.1	2	14	13.2	2	5.5	2	106.5	11.2	-6.4		9	5.7	3.5
	Loc 2	N/A	N/A	N/A	N/A	N/A	N/A	N/A	N/A	N/A	N/A	N/A	N/A	N/A	N/A	N/A	N/A	N/A	N/A	N/A	N/A	N/A	N/A		N/A	N/A	
25	Existing Lock	N/A	7.4	6	2	4.9	2	18.1	2	5.0	2	8	2	6.0	2	14	6.5	2	5.0	2	96.9	14.4			13	5.0	3.5
	Loc 1	N/A	7.4	6	2	7.7	2	18.1	2	7.4	2	8	2	8.8	2	14	6.5	2	7.4	2	107.3	10.1	-10.4		8	5.0	3.5
	Loc 2	N/A	N/A	N/A	N/A	N/A	N/A	N/A	N/A	N/A	N/A	N/A	N/A	N/A	N/A	N/A	N/A	N/A	N/A	N/A	N/A	N/A	N/A		N/A	N/A	
	Loc 3	N/A	7.4	6	2	4.9	2	18.1	2	5.0	2	8	2	7.1	2	14	6.5	2	5.0	2	98.0	10.1	-1.1		8	5.0	3.5
	Loc 4	N/A	7.4	6	2	4.9	2	18.1	2	5.0	2	8	2	6.0	2	14	6.5	2	5.0	2	96.9	10.1	0.0		8	5.0	3.5
24	Existing Lock	N/A	8.2	6	2	5.0	2	20.4	2	6.2	2	8	2	6.6	2	14	8.8	2	6.2	2	105.4	13.2			12	4.1	3.5
	Loc 2	N/A	N/A	N/A	N/A	N/A	N/A	N/A	N/A	N/A	N/A	N/A	N/A	N/A	N/A	N/A	N/A	N/A	N/A	N/A	N/A	N/A	N/A		N/A	N/A	
	Loc 3	N/A	8.2	6	2	5.0	2	20.4	2	6.2	2	8	2	6.6	2	14	8.8	2	6.2	2	105.4	9.6	0.0		8	4.1	3.5
	Loc 4	N/A	8.2	6	2	5.0	2	20.4	2	6.2	2	8	2	6.6	2	14	8.8	2	6.2	2	105.4	9.6	0.0		8	4.1	3.5
22	Existing Lock	N/A	9.1	6	2	2.8	2	18.4	2	3.0	2	8	2	3.3	2	14	10	2	3.0	2	93.6	18.5			16	8.5	3.5
	Loc 2	N/A	N/A	N/A	N/A	N/A	N/A	N/A	N/A	N/A	N/A	N/A	N/A	N/A	N/A	N/A	N/A	N/A	N/A	N/A	N/A	N/A	N/A		N/A	N/A	
	Loc 3	N/A	9.1	6	2	2.8	2	18.4	2	3.0	2	8	2	3.3	2	14	10	2	3.0	2	93.6	13.6	0.0		10	8.5	3.5
	Loc 4	N/A	9.1	6	2	2.8	2	18.4	2	3.0	2	8	2	3.3	2	14	10	2	3.0	2	93.6	13.6	0.0		10	8.5	3.5
21	Existing Lock	N/A	8.0	6	2	2.3	2	16.8	2	2.2	2	8	2	2.4	2	14	9.6	2	2.2	2	87.5	15.2			14	4.8	3.5
	Loc 2	N/A	N/A	N/A	N/A	N/A	N/A	N/A	N/A	N/A	N/A	N/A	N/A	N/A	N/A	N/A	N/A	N/A	N/A	N/A	N/A	N/A	N/A		N/A	N/A	
	Loc 3	N/A	8.0	6	2	2.3	2	16.8	2	2.2	2	8	2	2.4	2	14	9.6	2	2.2	2	87.5	11.6	0.0		10	4.8	3.5
	Loc 4	N/A	8.0	6	2	2.3	2	16.8	2	2.2	2	8	2	2.4	2	14	9.6	2	2.2	2	87.5	11.6	0.0		10	4.8	3.5
20	Existing Lock	N/A	8.6	6	2	3.7	2	16.9	2	3.8	2	8	2	4.1	2	14	10.3	2	3.8	2	95.2	16.2			15	5.1	3.5
	Loc 2	N/A	N/A	N/A	N/A	N/A	N/A	N/A	N/A	N/A	N/A	N/A	N/A	N/A	N/A	N/A	N/A	N/A	N/A	N/A	N/A	N/A	N/A		N/A	N/A	
	Loc 3	N/A	8.6	6	2	3.7	2	16.9	2	3.8	2	8	2	4.1	2	14	10.3	2	3.8	2	95.2	11.8	0.0		10	5.1	3.5
	Loc 4	N/A	8.6	6	2	3.7	2	16.9	2	3.8	2	8	2	4.1	2	14	10.3	2	3.8	2	95.2	11.8	0.0		10	5.1	3.5
19	Existing Lock	N/A	10.9	N/A	N/A	N/A	N/A	N/A	N/A	N/A	N/A	N/A	2	20.0	2	N/A	10.5	2	N/A	2	49.4	14.0			14	0	
	No 600' Alts.	N/A	N/A	N/A	N/A	N/A	N/A	N/A	N/A	N/A	N/A	N/A	N/A	N/A	N/A	N/A	N/A	N/A	N/A	N/A	N/A	N/A	N/A		N/A	N/A	
																			0.0								
18	Existing Lock	N/A	8.0	6	2	3.3	2	17.4	2	3.6	2	8	2	3.6	2	14	9.0	2	3.6	2	92.5	15.0			14	4.2	3.5
	Loc 2	N/A	N/A	N/A	N/A	N/A	N/A	N/A	N/A	N/A	N/A	N/A	N/A	N/A	N/A	N/A	N/A	N/A	N/A	N/A	N/A	N/A	N/A		N/A	N/A	
	Loc 3	N/A	8.0	6	2	3.3	2	17.4	2	3.6	2	8	2	3.6	2	14	9.0	2	3.6	2	92.5	13.2	0.0		12	4.2	3.5
	Loc 4	N/A	8.0	6	2	3.3	2	17.4	2	3.6	2	8	2	3.6	2	14	9.0	2	3.6	2	92.5	11.4	0.0		10	4.2	3.5
17	Existing Lock	N/A	8.9	6	2	2.8	2	19.5	2	3.1	2	8	2	2.8	2	14	8.8	2	3.1	2	93.0	16.1			15	4.7	3.5
	Loc 1	N/A	8.9	6	2	4.2	2	19.5	2	3.8	2	8	2	4.2	2	14	8.8	2	3.8	2	97.2	11.6	-4.2		10	4.7	3.5
	Loc 2	N/A	N/A	N/A	N/A	N/A	N/A	N/A	N/A	N/A	N/A	N/A	N/A	N/A	N/A	N/A	N/A	N/A	N/A	N/A	N/A	N/A	N/A		N/A	N/A	
	Loc 3	N/A	8.9	6	2	2.8	2	19.5	2	3.1	2	8	2	2.8	2	14	8.8	2	3.1	2	93.0	11.6	0.0		10	4.7	3.5
	Loc 4	N/A	8.9	6	2	2.8	2	19.5	2	3.1	2	8	2	2.8	2	14	8.8	2	3.1	2	93.0	11.6	0.0		10	4.7	3.5
16	Existing Lock	N/A	8.3	6	2	3.8	2	16.0	2	4.0	2	8	2	4.2	2	14	8	2	4.0	2	92.3	16.2			15	5.1	3.5
	Loc 2	N/A	N/A	N/A	N/A	N/A	N/A	N/A	N/A	N/A	N/A	N/A	N/A	N/A	N/A	N/A	N/A	N/A	N/A	N/A	N/A	N/A	N/A		N/A	N/A	
	Loc 3	N/A	8.3	6	2	3.8	2	16.0	2	4.0	2	8	2	4.2	2	14	8	2	4.0	2	92.3	11.8	0.0		10	5.1	3.5
	Loc 4	N/A	8.3	6	2	3.8	2	16.0	2	4.0	2	8	2	4.2	2	14	8	2	4.0	2	92.3	11.8	0.0		10	5.1	3.5
15	Existing Lock	N/A	8.3	6	2	5.7	2	12.9	2	5.7	2	8	2	8.1	2	14	13.2	2	5.7	2	103.6	15.6			15	2.6	3.5
	Loc 2	N/A	N/A	N/A	N/A	N/A	N/A	N/A	N/A	N/A	N/A	N/A	N/A	N/A	N/A	N/A	N/A	N/A	N/A	N/A	N/A	N/A	N/A		N/A	N/A	
	Loc 3	N/A	8.3	6	2	5.7	2	12.9	2	5.7	2	8	2	8.1	2	14	13.2	2	5.7	2	103.6	10.9	0.0		10	2.6	3.5
14	Existing Lock	N/A	8.7	6	2	4.6	2	15.1	2	4.5	2	8	2	4.7	2	14	11.1	2	4.5	2	97.2	13.2			12	4.1	3.5
	Loc 2	N/A	N/A	N/A	N/A	N/A	N/A	N/A	N/A	N/A	N/A	N/A	N/A	N/A	N/A	N/A	N/A	N/A	N/A	N/A	N/A	N/A	N/A		N/A	N/A	
	Loc 4	N/A	8.7	6	2	4.6	2	15.1	2	4.5	2	8	2	4.7	2	14	11.1	2	4.5	2	97.2	11.4	0.0		10	4.1	3.5
13	Existing Lock	N/A	6.8	6	2	4.1	2	15.6	2	4.2	2	8	2	4.2	2	14	8.1	2	4.2	2	91.2	9.7			8	4.3	3.5
	Loc 2	N/A	N/A	N/A	N/A	N/A	N/A	N/A	N/A	N/A	N/A	N/A	N/A	N/A	N/A	N/A	N/A	N/A	N/A	N/A	N/A	N/A	N/A		N/A	N/A	
	Loc 3	N/A	6.8	6	2	4.1	2	15.6	2	4.2	2	8	2	4.2	2	14	8.1	2	4.2	2	91.2	9.7	0.0		8	4.3	3.5
	Loc 4	N/A	6.8	6	2	4.1	2	15.6	2	4.2	2	8	2	4.2	2	14	8.1	2	4.2	2	91.2	9.7	0.0		8	4.3	3.5
12	Existing Lock	N/A	7.8	6	2	4.1	2	16.0	2	3.9	2	8	2	4.2	2	14	8.1	2	3.9	2	92.0	11.2			10	3.7	3.5
	Loc 2	N/A	N/A	N/A	N/A	N/A	N/A	N/A	N/A	N/A	N/A	N/A	N/A	N/A	N/A	N/A	N/A	N/A	N/A	N/A	N/A	N/A	N/A		N/A	N/A	
	Loc 3	N/A	7.8	6	2	4.1	2	16.0	2	3.9	2	8	2	4.2	2	14	8.1	2	3.9	2	92.0	8.7	0.0		7	3.7	3.5
	Loc 4	N/A	7.8	6	2	4.1	2	16.0	2	3.9	2	8	2	4.2	2	14	8.1	2	3.9	2	92.0	8.7	0.0		7	3.7	3.5
11	Existing Lock	N/A	8.1	6	2	5.3	2	17.5	2	5.1	2	8	2	5.4	2	14	6.9	2	5.1	2	97.5	13.3			12	4.5	3.5
	Loc 2	N/A	N/A	N/A	N/A	N/A	N/A	N/A	N/A	N/A	N/A	N/A	N/A	N/A	N/A	N/A	N/A	N/A	N/A	N/A	N/A	N/A	N/A		N/A	N/A	
	Loc 3	N/A	8.1	6	2	5.3	2	17.5	2	5.1	2	8	2	5.4	2	14	6.9	2	5.1	2	97.5	9.8	0.0		8	4.5	3.5
																				Average Time Difference (Min.) =			-1.0				

Notes:

Columns 4 and 5 are reported in LPMS data for existing locks as a single value called "Chamber Entry". The values shown here for Chamber Entry are those from LPMS minus the estimated time of 6 min. for uncoupling which is included as Column 5.

Columns 6, 7, and 8 are reported in LPMS data for existing locks as a single value called "Chambering Time". The sum of the steps reported here equals those chambering times.

Columns 17 and 18 are reported in LPMS data for existing locks as a single value called "Exit - Fly, Exch, or Trnbk". The values shown here for Exit are those from LPMS minus the estimated time of 14 min. for recoupling which is included as Column 17.

For many of the steps the standard deviations were not known. Therefore the overall standard deviations (Column 27) is under-represented, especially for the Existing Locks (which have more steps).

Some of the items were not specifically studied. This was generally because there's no good way of estimating the time changes and because refining those steps would make little difference in the total lockage time.

Exit times for turnback lockages(Column 20) where estimated by using the exit of a single plus 3.4 minutes. The 3.4 minutes is the additional time required to move the extra 600 feet of tow (moving 2mph) over the sill. The methodology was compared with movements at L/D 26 auxiliary and main chambers which verified the estimations.

35

UPBOUND LOCKAGE STEPS WITH FLY APPROACH AND EXIT

Lock Site	Lock Alternative	1 Approach (Fly)	4 Chamber Entry	5 Uncoup-ling (and backing 2nd cut out of chamber)	6 Gate Operation	7 Filling the Chamber	8 Gate Operation	9 Extract First Cut	10 Gate Operation	11 Emptying the Chamber	12 Gate Operation	13 2nd cut entry	14 Gate Operation	15 Filling the Chamber	16 Gate Operation	17 Tow Remake	18 Exit (Fly)	21 Gate Operation	22 Emptying the Chamber	23 Gate Operation	24 Total Lockage Time (min.) Fly	27 Standard Deviation	28 Time Savings on Doubles (Fly)	31	32 Standard Deviation (from Approach only)	33 Standard Deviation (from Extracting 1st cut only)	34 Standard Deviation (from Remake only)
L.G.	Existing Lock	17	8.3	6	2	3.0	2	13.7	2	3.2	2	8	2	3.0	2	14	10.2	N/A	N/A	N/A	98.4	11.0			9	5.3	3.5
	Loc 1	17	8.3	6	2	4.1	2	13.7	2	4.4	2	8	2	4.1	2	14	10.2	N/A	N/A	N/A	101.8	11.0	-3.4		9	5.3	3.5
	Loc 2	N/A	N/A	N/A	N/A	N/A	N/A	N/A	N/A	N/A	N/A	N/A	N/A	N/A	N/A	N/A	N/A	N/A	N/A	N/A	N/A	N/A	N/A		N/A	N/A	
Peo.	Existing Lock	17	11.0	6	2	4.0	2	13.8	2	4.4	2	8	2	4.0	2	14	9.9	N/A	N/A	N/A	104.1	12.6			11	5.1	3.5
	Loc 1	17	11.0	6	2	5.5	2	13.8	2	6.1	2	8	2	5.5	2	14	9.9	N/A	N/A	N/A	108.8	12.6	-4.7		11	5.1	3.5
	Loc 2	N/A	N/A	N/A	N/A	N/A	N/A	N/A	N/A	N/A	N/A	N/A	N/A	N/A	N/A	N/A	N/A	N/A	N/A	N/A	N/A	N/A	N/A		N/A	N/A	
25	Existing Lock	15	7.6	6	2	5.0	2	12.6	2	4.9	2	8	2	5.0	2	14	6.3	N/A	N/A	N/A	96.4	9.8			8	4.4	3.5
	Loc 1	13	7.6	6	2	7.4	2	12.6	2	8.8	2	8	2	7.4	2	14	6.3	N/A	N/A	N/A	103.1	9.0	-6.7		7	4.4	3.5
	Loc 2	N/A	N/A	N/A	N/A	N/A	N/A	N/A	N/A	N/A	N/A	N/A	N/A	N/A	N/A	N/A	N/A	N/A	N/A	N/A	N/A	N/A	N/A		N/A	N/A	
	Loc 3	13	7.6	6	2	5.0	2	12.6	2	4.9	2	8	2	5.0	2	14	6.3	N/A	N/A	N/A	94.4	9.0	2.0		7	4.4	3.5
	Loc 4	13	7.6	6	2	5.0	2	12.6	2	4.9	2	8	2	5.0	2	14	6.3	N/A	N/A	N/A	94.4	9.0	2.0		7	4.4	3.5
24	Existing Lock	16	7.5	6	2	6.2	2	13.3	2	5.0	2	8	2	6.2	2	14	8.0	N/A	N/A	N/A	102.2	10.5			9	4.1	3.5
	Loc 2	N/A	N/A	N/A	N/A	N/A	N/A	N/A	N/A	N/A	N/A	N/A	N/A	N/A	N/A	N/A	N/A	N/A	N/A	N/A	N/A	N/A	N/A		N/A	N/A	
	Loc 3	14	7.5	6	2	6.2	2	13.3	2	5.0	2	8	2	6.2	2	14	8.0	N/A	N/A	N/A	100.2	9.6	2.0		8	4.1	3.5
	Loc 4	14	7.5	6	2	6.2	2	13.3	2	5.0	2	8	2	6.2	2	14	8.0	N/A	N/A	N/A	100.2	9.6	2.0		8	4.1	3.5
22	Existing Lock	36	8.4	6	2	3.0	2	15.0	2	2.8	2	8	2	3.0	2	14	10.1	N/A	N/A	N/A	118.3	15.9			15	4.1	3.5
	Loc 2	N/A	N/A	N/A	N/A	N/A	N/A	N/A	N/A	N/A	N/A	N/A	N/A	N/A	N/A	N/A	N/A	N/A	N/A	N/A	N/A	N/A	N/A		N/A	N/A	
	Loc 3	34	8.4	6	2	3.0	2	15.0	2	2.8	2	8	2	3.0	2	14	10.1	N/A	N/A	N/A	116.3	15.0	2.0		14	4.1	3.5
	Loc 4	34	8.4	6	2	3.0	2	15.0	2	2.8	2	8	2	3.0	2	14	10.1	N/A	N/A	N/A	116.3	15.0	2.0		14	4.1	3.5
21	Existing Lock	23	7.4	6	2	2.2	2	13.1	2	2.3	2	8	2	2.2	2	14	7.1	N/A	N/A	N/A	97.3	19.9			19	4.6	3.5
	Loc 2	N/A	N/A	N/A	N/A	N/A	N/A	N/A	N/A	N/A	N/A	N/A	N/A	N/A	N/A	N/A	N/A	N/A	N/A	N/A	N/A	N/A	N/A		N/A	N/A	
	Loc 3	23	7.4	6	2	2.2	2	13.1	2	2.3	2	8	2	2.2	2	14	7.1	N/A	N/A	N/A	97.3	19.9	0.0		19	4.6	3.5
	Loc 4	23	7.4	6	2	2.2	2	13.1	2	2.3	2	8	2	2.2	2	14	7.1	N/A	N/A	N/A	97.3	19.9	0.0		19	4.6	3.5
20	Existing Lock	31	7.0	6	2	3.8	2	14.4	2	3.7	2	8	2	3.8	2	14	6.4	N/A	N/A	N/A	110.1	16.2			15	5.1	3.5
	Loc 2	N/A	N/A	N/A	N/A	N/A	N/A	N/A	N/A	N/A	N/A	N/A	N/A	N/A	N/A	N/A	N/A	N/A	N/A	N/A	N/A	N/A	N/A		N/A	N/A	
	Loc 3	27	7.0	6	2	3.8	2	14.4	2	3.7	2	8	2	3.8	2	14	6.4	N/A	N/A	N/A	106.1	14.4	4.0		13	5.1	3.5
	Loc 4	27	7.0	6	2	3.8	2	14.4	2	3.7	2	8	2	3.8	2	14	6.4	N/A	N/A	N/A	106.1	14.4	4.0		13	5.1	3.5
19	Existing Lock	18	10.3	N/A	N/A	N/A	N/A	N/A	N/A	N/A	N/A	N/A	2	14.1	2	N/A	10.0	N/A	N/A	N/A	56.4	9.0			9	0	
	No 600' Alts.	N/A	N/A	N/A	N/A	N/A	N/A	N/A	N/A	N/A	N/A	N/A	N/A	N/A	N/A	N/A	N/A	N/A	N/A	N/A	N/A	N/A	N/A		N/A	N/A	
18	Existing Lock	16	6.4	6	2	3.6	2	14.3	2	3.3	2	8	2	3.6	2	14	6.3	N/A	N/A	N/A	93.5	9.2			7	4.9	3.5
	Loc 2	N/A	N/A	N/A	N/A	N/A	N/A	N/A	N/A	N/A	N/A	N/A	N/A	N/A	N/A	N/A	N/A	N/A	N/A	N/A	N/A	N/A	N/A		N/A	N/A	
	Loc 3	16	6.4	6	2	3.6	2	14.3	2	3.3	2	8	2	3.6	2	14	6.3	N/A	N/A	N/A	93.5	9.2	0.0		7	4.9	3.5
	Loc 4	16	6.4	6	2	3.6	2	14.3	2	3.3	2	8	2	3.6	2	14	6.3	N/A	N/A	N/A	93.5	9.2	0.0		7	4.9	3.5
17	Existing Lock	22	6.9	6	2	3.1	2	15.1	2	2.8	2	8	2	3.1	2	14	7.8	N/A	N/A	N/A	100.8	10.1			8	5.1	3.5
	Loc 1	19	6.9	6	2	3.8	2	15.1	2	4.2	2	8	2	3.8	2	14	7.8	N/A	N/A	N/A	100.6	9.3	0.2		7	5.1	3.5
	Loc 2	N/A	N/A	N/A	N/A	N/A	N/A	N/A	N/A	N/A	N/A	N/A	N/A	N/A	N/A	N/A	N/A	N/A	N/A	N/A	N/A	N/A	N/A		N/A	N/A	
	Loc 3	19	6.9	6	2	3.1	2	15.1	2	2.8	2	8	2	3.1	2	14	7.8	N/A	N/A	N/A	97.8	9.3	3.0		7	5.1	3.5
	Loc 4	19	6.9	6	2	3.1	2	15.1	2	2.8	2	8	2	3.1	2	14	7.8	N/A	N/A	N/A	97.8	9.3	3.0		7	5.1	3.5
16	Existing Lock	19	6.8	6	2	4.0	2	14.4	2	3.8	2	8	2	4.0	2	14	9.8	N/A	N/A	N/A	101.8	10.0			8	4.9	3.5
	Loc 2	N/A	N/A	N/A	N/A	N/A	N/A	N/A	N/A	N/A	N/A	N/A	N/A	N/A	N/A	N/A	N/A	N/A	N/A	N/A	N/A	N/A	N/A		N/A	N/A	
	Loc 3	18	6.8	6	2	4.0	2	14.4	2	3.8	2	8	2	4.0	2	14	9.8	N/A	N/A	N/A	100.8	9.2	1.0		7	4.9	3.5
	Loc 4	18	6.8	6	2	4.0	2	14.4	2	3.8	2	8	2	4.0	2	14	9.8	N/A	N/A	N/A	100.8	9.2	1.0		7	4.9	3.5
15	Existing Lock	17	7.2	6	2	5.7	2	15.4	2	5.7	2	8	2	5.7	2	14	7.4	N/A	N/A	N/A	104.1	12.2			10	6	3.5
	Loc 2	N/A	N/A	N/A	N/A	N/A	N/A	N/A	N/A	N/A	N/A	N/A	N/A	N/A	N/A	N/A	N/A	N/A	N/A	N/A	N/A	N/A	N/A		N/A	N/A	
	Loc 3	15	7.2	6	2	5.7	2	15.4	2	5.7	2	8	2	5.7	2	14	7.4	N/A	N/A	N/A	102.1	11.4	2.0		9	6	3.5
14	Existing Lock	15	8.1	6	2	4.5	2	14.2	2	4.6	2	8	2	4.5	2	14	7.4	N/A	N/A	N/A	98.3	10.6			9	4.3	3.5
	Loc 2	N/A	N/A	N/A	N/A	N/A	N/A	N/A	N/A	N/A	N/A	N/A	N/A	N/A	N/A	N/A	N/A	N/A	N/A	N/A	N/A	N/A	N/A		N/A	N/A	
	Loc 4	15	8.1	6	2	4.5	2	14.2	2	4.6	2	8	2	4.5	2	14	7.4	N/A	N/A	N/A	98.3	9.7	0.0		8	4.3	3.5
13	Existing Lock	14	5.6	6	2	4.2	2	13.1	2	4.1	2	8	2	4.2	2	14	4.8	N/A	N/A	N/A	90.0	8.3			6	4.6	3.5
	Loc 2	N/A	N/A	N/A	N/A	N/A	N/A	N/A	N/A	N/A	N/A	N/A	N/A	N/A	N/A	N/A	N/A	N/A	N/A	N/A	N/A	N/A	N/A		N/A	N/A	
	Loc 3	14	5.6	6	2	4.2	2	13.1	2	4.1	2	8	2	4.2	2	14	4.8	N/A	N/A	N/A	90.0	8.3	0.0		6	4.6	3.5
	Loc 4	14	5.6	6	2	4.2	2	13.1	2	4.1	2	8	2	4.2	2	14	4.8	N/A	N/A	N/A	90.0	8.3	0.0		6	4.6	3.5
12	Existing Lock	16	6.5	6	2	3.9	2	12.2	2	4.1	2	8	2	3.9	2	14	5.1	N/A	N/A	N/A	91.7	7.9			6	3.8	3.5
	Loc 2	N/A	N/A	N/A	N/A	N/A	N/A	N/A	N/A	N/A	N/A	N/A	N/A	N/A	N/A	N/A	N/A	N/A	N/A	N/A	N/A	N/A	N/A		N/A	N/A	
	Loc 3	15	6.5	6	2	3.9	2	12.2	2	4.1	2	8	2	3.9	2	14	5.1	N/A	N/A	N/A	90.7	7.9	1.0		6	3.8	3.5
	Loc 4	15	6.5	6	2	3.9	2	12.2	2	4.1	2	8	2	3.9	2	14	5.1	N/A	N/A	N/A	90.7	7.9	1.0		6	3.8	3.5
11	Existing Lock	18	6.7	6	2	5.1	2	16.7	2	5.3	2	8	2	5.1	2	14	8.3	N/A	N/A	N/A	105.3	11.8			8	8	3.5
	Loc 2	N/A	N/A	N/A	N/A	N/A	N/A	N/A	N/A	N/A	N/A	N/A	N/A	N/A	N/A	N/A	N/A	N/A	N/A	N/A	N/A	N/A	N/A		N/A	N/A	
	Loc 3	18	6.7	6	2	5.1	2	16.7	2	5.3	2	8	2	5.1	2	14	8.3	N/A	N/A	N/A	105.3	11.8	0.0		8	8	3.5
																					Average Time Difference (Min.) =		0.6				

Notes:

Columns 4 and 5 are reported in LPMS data for existing locks as a single value called "Chamber Entry". The values shown here for Chamber Entry are those from LPMS minus the estimated time of 6 min. for uncoupling which is included as Column 5.

Columns 6, 7, and 8 are reported in LPMS data for existing locks as a single value called "Chambering Time". The sum of the steps reported here equals those chambering times.

Columns 17 and 18 are reported in LPMS data for existing locks as a single value called "Exit - Fly, Exch, or Trnbk". The values shown here for Exit are those from LPMS minus the estimated time of 14 min. for recoupling which is included as Column 17.

For many of the steps the standard deviations were not known. Therefore the overall standard deviations (Column 27) is under-represented, especially for the Existing Locks (which have more steps).

Some of the items were not specifically studied. This was generally because there's no good way of estimating the time changes and because refining those steps would make little difference in the total lockage time.

Performance Comparison of Without-Project versus with 600' Locks
UPBOUND LOCKAGE STEPS WITH EXCHANGE APPROACH AND EXIT

Lock Site	Lock Alternative	2 Approach (Exchange)	4 Chamber Entry	5 Uncoup-ling (and backing 2nd cut out of chamber)	6 Gate Operation	7 Filling the Chamber	8 Gate Operation	9 Extract First Cut	10 Gate Operation	11 Emptying the Chamber	12 Gate Operation	13 2nd cut entry	14 Gate Operation	15 Filling the Chamber	16 Gate Operation	17 Tow Remake	19 Exit (Exchange)	21 Gate Operation	22 Emptying the Chamber	23 Gate Operation	25 Total Lockage Time (min.) Exchange	27 Standard Deviation	29 Time Savings on Doubles (Exchange)	31	32 Standard Deviation (from Approach only)	33 Standard Deviation (from Extracting 1st cut only)	34 Standard Deviation (from Remake only)
L.G.	Existing Lock	21.9	8.3	6	2	3.0	2	13.7	2	3.2	2	8	2	3.0	2	14	18.3	N/A	N/A	N/A	111.4	11.0			9	5.3	3.5
	Loc 1	21.9	8.3	6	2	4.1	2	13.7	2	4.4	2	8	2	4.1	2	14	18.3	N/A	N/A	N/A	114.8	11.0	-3.4		9	5.3	3.5
	Loc 2	N/A	N/A	N/A	N/A	N/A	N/A	N/A	N/A	N/A	N/A	N/A	N/A	N/A	N/A	N/A	N/A	N/A	N/A	N/A	N/A	N/A	N/A		N/A	N/A	
Peo.	Existing Lock	22.1	11.0	6	2	4.0	2	13.8	2	4.4	2	8	2	4.0	2	14	14.2	N/A	N/A	N/A	113.5	12.6			11	5.1	3.5
	Loc 1	22.1	11.0	6	2	5.5	2	13.8	2	6.1	2	8	2	5.5	2	14	14.2	N/A	N/A	N/A	118.2	12.6	-4.7		11	5.1	3.5
	Loc 2	N/A	N/A	N/A	N/A	N/A	N/A	N/A	N/A	N/A	N/A	N/A	N/A	N/A	N/A	N/A	N/A	N/A	N/A	N/A	N/A	N/A	N/A		N/A	N/A	
25	Existing Lock	17.1	7.6	6	2	5.0	2	12.6	2	4.9	2	8	2	5.0	2	14	9.1	N/A	N/A	N/A	101.3	9.8			8	4.4	3.5
	Loc 1	17.1	7.6	6	2	7.4	2	12.6	2	8.8	2	8	2	7.4	2	14	9.1	N/A	N/A	N/A	110.0	9.0	-8.7		7	4.4	3.5
	Loc 2	N/A	N/A	N/A	N/A	N/A	N/A	N/A	N/A	N/A	N/A	N/A	N/A	N/A	N/A	N/A	N/A	N/A	N/A	N/A	N/A	N/A	N/A		N/A	N/A	
	Loc 3	17.1	7.6	6	2	5.0	2	12.6	2	4.9	2	8	2	5.0	2	14	9.1	N/A	N/A	N/A	101.3	9.0	0.0		7	4.4	3.5
	Loc 4	17.1	7.6	6	2	5.0	2	12.6	2	4.9	2	8	2	5.0	2	14	9.1	N/A	N/A	N/A	101.3	9.0	0.0		7	4.4	3.5
24	Existing Lock	15.5	7.5	6	2	6.2	2	13.3	2	5.0	2	8	2	6.2	2	14	11.6	N/A	N/A	N/A	105.3	10.5			9	4.1	3.5
	Loc 2	N/A	N/A	N/A	N/A	N/A	N/A	N/A	N/A	N/A	N/A	N/A	N/A	N/A	N/A	N/A	N/A	N/A	N/A	N/A	N/A	N/A	N/A		N/A	N/A	
	Loc 3	15.5	7.5	6	2	6.2	2	13.3	2	5.0	2	8	2	6.2	2	14	11.6	N/A	N/A	N/A	105.3	9.6	0.0		8	4.1	3.5
	Loc 4	15.5	7.5	6	2	6.2	2	13.3	2	5.0	2	8	2	6.2	2	14	11.6	N/A	N/A	N/A	105.3	9.6	0.0		8	4.1	3.5
22	Existing Lock	23.6	8.4	6	2	3.0	2	15.0	2	2.8	2	8	2	3.0	2	14	16.4	N/A	N/A	N/A	112.2	15.9			15	4.1	3.5
	Loc 2	N/A	N/A	N/A	N/A	N/A	N/A	N/A	N/A	N/A	N/A	N/A	N/A	N/A	N/A	N/A	N/A	N/A	N/A	N/A	N/A	N/A	N/A		N/A	N/A	
	Loc 3	23.6	8.4	6	2	3.0	2	15.0	2	2.8	2	8	2	3.0	2	14	16.4	N/A	N/A	N/A	112.2	15.0	0.0		14	4.1	3.5
	Loc 4	23.6	8.4	6	2	3.0	2	15.0	2	2.8	2	8	2	3.0	2	14	16.4	N/A	N/A	N/A	112.2	15.0	0.0		14	4.1	3.5
21	Existing Lock	22.6	7.4	6	2	2.2	2	13.1	2	2.3	2	8	2	2.2	2	14	9.7	N/A	N/A	N/A	99.5	19.9			19	4.6	3.5
	Loc 2	N/A	N/A	N/A	N/A	N/A	N/A	N/A	N/A	N/A	N/A	N/A	N/A	N/A	N/A	N/A	N/A	N/A	N/A	N/A	N/A	N/A	N/A		N/A	N/A	
	Loc 3	22.6	7.4	6	2	2.2	2	13.1	2	2.3	2	8	2	2.2	2	14	9.7	N/A	N/A	N/A	99.5	19.9	0.0		19	4.6	3.5
	Loc 4	22.6	7.4	6	2	2.2	2	13.1	2	2.3	2	8	2	2.2	2	14	9.7	N/A	N/A	N/A	99.5	19.9	0.0		19	4.6	3.5
20	Existing Lock	22.3	7.0	6	2	3.8	2	14.4	2	3.7	2	8	2	3.8	2	14	9.6	N/A	N/A	N/A	104.6	16.2			15	5.1	3.5
	Loc 2	N/A	N/A	N/A	N/A	N/A	N/A	N/A	N/A	N/A	N/A	N/A	N/A	N/A	N/A	N/A	N/A	N/A	N/A	N/A	N/A	N/A	N/A		N/A	N/A	
	Loc 3	22.3	7.0	6	2	3.8	2	14.4	2	3.7	2	8	2	3.8	2	14	9.6	N/A	N/A	N/A	104.6	14.4	0.0		13	5.1	3.5
	Loc 4	22.3	7.0	6	2	3.8	2	14.4	2	3.7	2	8	2	3.8	2	14	9.6	N/A	N/A	N/A	104.6	14.4	0.0		13	5.1	3.5
19	Existing Lock	28.7	10.3	N/A	N/A	N/A	N/A	N/A	N/A	N/A	N/A	N/A	2	14.1	2	N/A	11.8	N/A	N/A	N/A	68.9	9.0			9	0	
	No 600' Alts.	N/A	N/A	N/A	N/A	N/A	N/A	N/A	N/A	N/A	N/A	N/A	N/A	N/A	N/A	N/A	N/A	N/A	N/A	N/A	N/A	N/A	N/A		N/A	N/A	
18	Existing Lock	19.4	6.4	6	2	3.6	2	14.3	2	3.3	2	8	2	3.6	2	14	8.3	N/A	N/A	N/A	98.9	9.2			7	4.9	3.5
	Loc 2	N/A	N/A	N/A	N/A	N/A	N/A	N/A	N/A	N/A	N/A	N/A	N/A	N/A	N/A	N/A	N/A	N/A	N/A	N/A	N/A	N/A	N/A		N/A	N/A	
	Loc 3	19.4	6.4	6	2	3.6	2	14.3	2	3.3	2	8	2	3.6	2	14	8.3	N/A	N/A	N/A	98.9	9.2	0.0		7	4.9	3.5
	Loc 4	19.4	6.4	6	2	3.6	2	14.3	2	3.3	2	8	2	3.6	2	14	8.3	N/A	N/A	N/A	98.9	9.2	0.0		7	4.9	3.5
17	Existing Lock	16.2	6.9	6	2	3.1	2	15.1	2	2.8	2	8	2	3.1	2	14	11.8	N/A	N/A	N/A	99.0	10.1			8	5.1	3.5
	Loc 1	16.2	6.9	6	2	3.8	2	15.1	2	4.2	2	8	2	3.8	2	14	11.8	N/A	N/A	N/A	101.8	9.3	-2.8		7	5.1	3.5
	Loc 2	N/A	N/A	N/A	N/A	N/A	N/A	N/A	N/A	N/A	N/A	N/A	N/A	N/A	N/A	N/A	N/A	N/A	N/A	N/A	N/A	N/A	N/A		N/A	N/A	
	Loc 3	16.2	6.9	6	2	3.1	2	15.1	2	2.8	2	8	2	3.1	2	14	11.8	N/A	N/A	N/A	99.0	9.3	0.0		7	5.1	3.5
	Loc 4	16.2	6.9	6	2	3.1	2	15.1	2	2.8	2	8	2	3.1	2	14	11.8	N/A	N/A	N/A	99.0	9.3	0.0		7	5.1	3.5
16	Existing Lock	14.9	6.8	6	2	4.0	2	14.4	2	3.8	2	8	2	4.0	2	14	7.2	N/A	N/A	N/A	95.1	10.0			8	4.9	3.5
	Loc 2	N/A	N/A	N/A	N/A	N/A	N/A	N/A	N/A	N/A	N/A	N/A	N/A	N/A	N/A	N/A	N/A	N/A	N/A	N/A	N/A	N/A	N/A		N/A	N/A	
	Loc 3	14.9	6.8	6	2	4.0	2	14.4	2	3.8	2	8	2	4.0	2	14	7.2	N/A	N/A	N/A	95.1	9.2	0.0		7	4.9	3.5
	Loc 4	14.9	6.8	6	2	4.0	2	14.4	2	3.8	2	8	2	4.0	2	14	7.2	N/A	N/A	N/A	95.1	9.2	0.0		7	4.9	3.5
15	Existing Lock	31.8	7.2	6	2	5.7	2	15.4	2	5.7	2	8	2	5.7	2	14	9.9	N/A	N/A	N/A	121.4	12.2			10	6	3.5
	Loc 2	N/A	N/A	N/A	N/A	N/A	N/A	N/A	N/A	N/A	N/A	N/A	N/A	N/A	N/A	N/A	N/A	N/A	N/A	N/A	N/A	N/A	N/A		N/A	N/A	
	Loc 3	31.8	7.2	6	2	5.7	2	15.4	2	5.7	2	8	2	5.7	2	14	9.9	N/A	N/A	N/A	121.4	11.4	0.0		9	6	3.5
14	Existing Lock	17.6	8.1	6	2	4.5	2	14.2	2	4.6	2	8	2	4.5	2	14	12.7	N/A	N/A	N/A	106.2	10.6			9	4.3	3.5
	Loc 2	N/A	N/A	N/A	N/A	N/A	N/A	N/A	N/A	N/A	N/A	N/A	N/A	N/A	N/A	N/A	N/A	N/A	N/A	N/A	N/A	N/A	N/A		N/A	N/A	
	Loc 4	17.6	8.1	6	2	4.5	2	14.2	2	4.6	2	8	2	4.5	2	14	12.7	N/A	N/A	N/A	106.2	9.7	0.0		8	4.3	3.5
13	Existing Lock	12.6	5.6	6	2	4.2	2	13.1	2	4.1	2	8	2	4.2	2	14	8.1	N/A	N/A	N/A	91.9	8.3			6	4.6	3.5
	Loc 2	N/A	N/A	N/A	N/A	N/A	N/A	N/A	N/A	N/A	N/A	N/A	N/A	N/A	N/A	N/A	N/A	N/A	N/A	N/A	N/A	N/A	N/A		N/A	N/A	
	Loc 3	12.6	5.6	6	2	4.2	2	13.1	2	4.1	2	8	2	4.2	2	14	8.1	N/A	N/A	N/A	91.9	8.3	0.0		6	4.6	3.5
	Loc 4	12.6	5.6	6	2	4.2	2	13.1	2	4.1	2	8	2	4.2	2	14	8.1	N/A	N/A	N/A	91.9	8.3	0.0		6	4.6	3.5
12	Existing Lock	14.8	6.5	6	2	3.9	2	12.2	2	4.1	2	8	2	3.9	2	14	6.2	N/A	N/A	N/A	91.6	7.9			6	3.8	3.5
	Loc 2	N/A	N/A	N/A	N/A	N/A	N/A	N/A	N/A	N/A	N/A	N/A	N/A	N/A	N/A	N/A	N/A	N/A	N/A	N/A	N/A	N/A	N/A		N/A	N/A	
	Loc 3	14.8	6.5	6	2	3.9	2	12.2	2	4.1	2	8	2	3.9	2	14	6.2	N/A	N/A	N/A	91.6	7.9	0.0		6	3.8	3.5
	Loc 4	14.8	6.5	6	2	3.9	2	12.2	2	4.1	2	8	2	3.9	2	14	6.2	N/A	N/A	N/A	91.6	7.9	0.0		6	3.8	3.5
11	Existing Lock	11	6.7	6	2	5.1	2	16.7	2	5.3	2	8	2	5.1	2	14	6.8	N/A	N/A	N/A	96.8	11.8			8	8	3.5
	Loc 2	N/A	N/A	N/A	N/A	N/A	N/A	N/A	N/A	N/A	N/A	N/A	N/A	N/A	N/A	N/A	N/A	N/A	N/A	N/A	N/A	N/A	N/A		N/A	N/A	
	Loc 3	11	6.7	6	2	5.1	2	16.7	2	5.3	2	8	2	5.1	2	14	6.8	N/A	N/A	N/A	96.8	11.8	0.0		8	8	3.5
																					Average Time Difference (Min.) =		-0.7				

Notes:

Columns 4 and 5 are reported in LPMS data for existing locks as a single value called "Chamber Entry". The values shown here for Chamber Entry are those from LPMS minus the estimated time of 6 min. for uncoupling which is included as Column 5.

Columns 6, 7, and 8 are reported in LPMS data for existing locks as a single value called "Chambering Time". The sum of the steps reported here equals those chambering times.

Columns 17 and 18 are reported in LPMS data for existing locks as a single value called "Exit - Fly, Exch, or Trnbk". The values shown here for Exit are those from LPMS minus the estimated time of 14 min. for recoupling which is included as Column 17.

For many of the steps the standard deviations were not known. Therefore the overall standard deviations (Column 27) is under-represented, especially for the Existing Locks (which have more steps).

Some of the items were not specifically studied. This was generally because there's no good way of estimating the time changes and because refining those steps would make little difference in the total lockage time.

Performance Comparison of Without-Project versus with 600' Locks

UPBOUND LOCKAGE STEPS WITH TURNBACK APPROACH AND EXIT

		3	4	5	6	7	8	9	10	11	12	13	14	15	16	17	20	21	22	23	26	27	30	31	32	33	34
Lock Site	Lock Alternative	Approach (Turnback)	Chamber Entry	Uncoup-ling (and backing 2nd cut out of chamber)	Gate Operation	Filling the Chamber	Gate Operation	Extract First Cut	Gate Operation	Emptying the Chamber	Gate Operation	2nd cut entry	Gate Operation	Filling the Chamber	Gate Operation	Tow Remake	Exit (Turnback)	Gate Operation	Emptying the Chamber	Gate Operation	Total Lockage Time (min.) Turnback	Standard Deviation	Time Savings on Doubles (Turnback)		Standard Deviation (from Approach only)	Standard Deviation (from Extracting 1st cut only)	Standard Deviation (from Remake only)
L.G.	Existing Lock	N/A	8.3	6	2	3.0	2	13.7	2	3.2	2	8	2	3.0	2	14	9.3	2	3.2	2	87.7	11.0			9	5.3	3.5
	Loc 1	N/A	8.3	6	2	4.1	2	13.7	2	4.4	2	8	2	4.1	2	14	9.3	2	4.4	2	92.3	11.0	-4.6		9	5.3	3.5
	Loc 2	N/A	N/A	N/A	N/A	N/A	N/A	N/A	N/A	N/A	N/A	N/A	N/A	N/A	N/A	N/A	N/A	N/A	N/A	N/A	N/A	N/A	N/A		N/A	N/A	
Peo.	Existing Lock	N/A	11.0	6	2	4.0	2	13.8	2	4.4	2	8	2	4.0	2	14	9.9	2	4.4	2	95.5	12.6			11	5.1	3.5
	Loc 1	N/A	11.0	6	2	5.5	2	13.8	2	6.1	2	8	2	5.5	2	14	9.9	2	6.1	2	101.9	12.6	-6.4		11	5.1	3.5
	Loc 2	N/A	N/A	N/A	N/A	N/A	N/A	N/A	N/A	N/A	N/A	N/A	N/A	N/A	N/A	N/A	N/A	N/A	N/A	N/A	N/A	N/A	N/A		N/A	N/A	
25	Existing Lock	N/A	7.6	6	2	5.0	2	12.6	2	4.9	2	8	2	5.0	2	14	6.5	2	4.9	2	90.5	9.8			8	4.4	3.5
	Loc 1	N/A	7.6	6	2	7.4	2	12.6	2	8.8	2	8	2	7.4	2	14	6.5	2	8.8	2	103.1	9.0	-12.6		7	4.4	3.5
	Loc 2	N/A	N/A	N/A	N/A	N/A	N/A	N/A	N/A	N/A	N/A	N/A	N/A	N/A	N/A	N/A	N/A	N/A	N/A	N/A	N/A	N/A	N/A		N/A	N/A	
	Loc 3	N/A	7.6	6	2	5.0	2	12.6	2	4.9	2	8	2	5.0	2	14	6.5	2	4.9	2	90.5	9.0	0.0		7	4.4	3.5
	Loc 4	N/A	7.6	6	2	5.0	2	12.6	2	4.9	2	8	2	5.0	2	14	6.5	2	4.9	2	90.5	9.0	0.0		7	4.4	3.5
24	Existing Lock	N/A	7.5	6	2	6.2	2	13.3	2	5.0	2	8	2	6.2	2	14	7.0	2	5.0	2	94.2	10.5			9	4.1	3.5
	Loc 2	N/A	N/A	N/A	N/A	N/A	N/A	N/A	N/A	N/A	N/A	N/A	N/A	N/A	N/A	N/A	N/A	N/A	N/A	N/A	N/A	N/A	N/A		N/A	N/A	
	Loc 3	N/A	7.5	6	2	6.2	2	13.3	2	5.0	2	8	2	6.2	2	14	7.0	2	5.0	2	94.2	9.6	0.0		8	4.1	3.5
	Loc 4	N/A	7.5	6	2	6.2	2	13.3	2	5.0	2	8	2	6.2	2	14	7.0	2	5.0	2	94.2	9.6	0.0		8	4.1	3.5
22	Existing Lock	N/A	8.4	6	2	3.0	2	15.0	2	2.8	2	8	2	3.0	2	14	7.3	2	2.8	2	86.3	15.9			15	4.1	3.5
	Loc 2	N/A	N/A	N/A	N/A	N/A	N/A	N/A	N/A	N/A	N/A	N/A	N/A	N/A	N/A	N/A	N/A	N/A	N/A	N/A	N/A	N/A	N/A		N/A	N/A	
	Loc 3	N/A	8.4	6	2	3.0	2	15.0	2	2.8	2	8	2	3.0	2	14	7.3	2	2.8	2	86.3	15.0	0.0		14	4.1	3.5
	Loc 4	N/A	8.4	6	2	3.0	2	15.0	2	2.8	2	8	2	3.0	2	14	7.3	2	2.8	2	86.3	15.0	0.0		14	4.1	3.5
21	Existing Lock	N/A	7.4	6	2	2.2	2	13.1	2	2.3	2	8	2	2.2	2	14	7.4	2	2.3	2	80.9	19.9			19	4.6	3.5
	Loc 2	N/A	N/A	N/A	N/A	N/A	N/A	N/A	N/A	N/A	N/A	N/A	N/A	N/A	N/A	N/A	N/A	N/A	N/A	N/A	N/A	N/A	N/A		N/A	N/A	
	Loc 3	N/A	7.4	6	2	2.2	2	13.1	2	2.3	2	8	2	2.2	2	14	7.4	2	2.3	2	80.9	19.9	0.0		19	4.6	3.5
	Loc 4	N/A	7.4	6	2	2.2	2	13.1	2	2.3	2	8	2	2.2	2	14	7.4	2	2.3	2	80.9	19.9	0.0		19	4.6	3.5
20	Existing Lock	N/A	7.0	6	2	3.8	2	14.4	2	3.7	2	8	2	3.8	2	14	5.9	2	3.7	2	86.3	16.2			15	5.1	3.5
	Loc 2	N/A	N/A	N/A	N/A	N/A	N/A	N/A	N/A	N/A	N/A	N/A	N/A	N/A	N/A	N/A	N/A	N/A	N/A	N/A	N/A	N/A	N/A		N/A	N/A	
	Loc 3	N/A	7.0	6	2	3.8	2	14.4	2	3.7	2	8	2	3.8	2	14	5.9	2	3.7	2	86.3	14.4	0.0		13	5.1	3.5
	Loc 4	N/A	7.0	6	2	3.8	2	14.4	2	3.7	2	8	2	3.8	2	14	5.9	2	3.7	2	86.3	14.4	0.0		13	5.1	3.5
19	Existing Lock	N/A	10.3	N/A	N/A	N/A	N/A	N/A	N/A	N/A	N/A	N/A	2	14.1	2	N/A	7.5	2	N/A	2	39.9	9.0			9	0	
	No 600' Alts.	N/A	N/A	N/A	N/A	N/A	N/A	N/A	N/A	N/A	N/A	N/A	N/A	N/A	N/A	N/A	N/A	N/A	N/A	N/A	N/A	N/A	N/A		N/A	N/A	
18	Existing Lock	N/A	6.4	6	2	3.6	2	14.3	2	3.3	2	8	2	3.6	2	14	6.7	2	3.3	2	85.2	9.2			7	4.9	3.5
	Loc 2	N/A	N/A	N/A	N/A	N/A	N/A	N/A	N/A	N/A	N/A	N/A	N/A	N/A	N/A	N/A	N/A	N/A	N/A	N/A	N/A	N/A	N/A		N/A	N/A	
	Loc 3	N/A	6.4	6	2	3.6	2	14.3	2	3.3	2	8	2	3.6	2	14	6.7	2	3.3	2	85.2	9.2	0.0		7	4.9	3.5
	Loc 4	N/A	6.4	6	2	3.6	2	14.3	2	3.3	2	8	2	3.6	2	14	6.7	2	3.3	2	85.2	9.2	0.0		7	4.9	3.5
17	Existing Lock	N/A	6.9	6	2	3.1	2	15.1	2	2.8	2	8	2	3.1	2	14	6.2	2	2.8	2	84.0	10.1			8	5.1	3.5
	Loc 1	N/A	6.9	6	2	3.8	2	15.1	2	4.2	2	8	2	3.8	2	14	6.2	2	4.2	2	88.2	9.3	-4.2		7	5.1	3.5
	Loc 2	N/A	N/A	N/A	N/A	N/A	N/A	N/A	N/A	N/A	N/A	N/A	N/A	N/A	N/A	N/A	N/A	N/A	N/A	N/A	N/A	N/A	N/A		N/A	N/A	
	Loc 3	N/A	6.9	6	2	3.1	2	15.1	2	2.8	2	8	2	3.1	2	14	6.2	2	2.8	2	84.0	9.3	0.0		7	5.1	3.5
	Loc 4	N/A	6.9	6	2	3.1	2	15.1	2	2.8	2	8	2	3.1	2	14	6.2	2	2.8	2	84.0	9.3	0.0		7	5.1	3.5
16	Existing Lock	N/A	6.8	6	2	4.0	2	14.4	2	3.8	2	8	2	4.0	2	14	5.4	2	3.8	2	86.2	10.0			8	4.9	3.5
	Loc 2	N/A	N/A	N/A	N/A	N/A	N/A	N/A	N/A	N/A	N/A	N/A	N/A	N/A	N/A	N/A	N/A	N/A	N/A	N/A	N/A	N/A	N/A		N/A	N/A	
	Loc 3	N/A	6.8	6	2	4.0	2	14.4	2	3.8	2	8	2	4.0	2	14	5.4	2	3.8	2	86.2	9.2	0.0		7	4.9	3.5
	Loc 4	N/A	6.8	6	2	4.0	2	14.4	2	3.8	2	8	2	4.0	2	14	5.4	2	3.8	2	86.2	9.2	0.0		7	4.9	3.5
15	Existing Lock	N/A	7.2	6	2	5.7	2	15.4	2	5.7	2	8	2	5.7	2	14	6.7	2	5.7	2	96.1	12.2			10	6	3.5
	Loc 2	N/A	N/A	N/A	N/A	N/A	N/A	N/A	N/A	N/A	N/A	N/A	N/A	N/A	N/A	N/A	N/A	N/A	N/A	N/A	N/A	N/A	N/A		N/A	N/A	
	Loc 3	N/A	7.2	6	2	5.7	2	15.4	2	5.7	2	8	2	5.7	2	14	6.7	2	5.7	2	96.1	11.4	0.0		9	6	3.5
14	Existing Lock	N/A	8.1	6	2	4.5	2	14.2	2	4.6	2	8	2	4.5	2	14	8.4	2	4.6	2	92.9	10.6			9	4.3	3.5
	Loc 2	N/A	N/A	N/A	N/A	N/A	N/A	N/A	N/A	N/A	N/A	N/A	N/A	N/A	N/A	N/A	N/A	N/A	N/A	N/A	N/A	N/A	N/A		N/A	N/A	
	Loc 4	N/A	8.1	6	2	4.5	2	14.2	2	4.6	2	8	2	4.5	2	14	8.4	2	4.6	2	92.9	9.7	0.0		8	4.3	3.5
13	Existing Lock	N/A	5.6	6	2	4.2	2	13.1	2	4.1	2	8	2	4.2	2	14	4.8	2	4.1	2	84.1	8.3			6	4.6	3.5
	Loc 2	N/A	N/A	N/A	N/A	N/A	N/A	N/A	N/A	N/A	N/A	N/A	N/A	N/A	N/A	N/A	N/A	N/A	N/A	N/A	N/A	N/A	N/A		N/A	N/A	
	Loc 3	N/A	5.6	6	2	4.2	2	13.1	2	4.1	2	8	2	4.2	2	14	4.8	2	4.1	2	84.1	8.3	0.0		6	4.6	3.5
	Loc 4	N/A	5.6	6	2	4.2	2	13.1	2	4.1	2	8	2	4.2	2	14	4.8	2	4.1	2	84.1	8.3	0.0		6	4.6	3.5
12	Existing Lock	N/A	6.5	6	2	3.9	2	12.2	2	4.1	2	8	2	3.9	2	14	3.7	2	4.1	2	82.4	7.9			6	3.8	3.5
	Loc 2	N/A	N/A	N/A	N/A	N/A	N/A	N/A	N/A	N/A	N/A	N/A	N/A	N/A	N/A	N/A	N/A	N/A	N/A	N/A	N/A	N/A	N/A		N/A	N/A	
	Loc 3	N/A	6.5	6	2	3.9	2	12.2	2	4.1	2	8	2	3.9	2	14	3.7	2	4.1	2	82.4	7.9	0.0		6	3.8	3.5
	Loc 4	N/A	6.5	6	2	3.9	2	12.2	2	4.1	2	8	2	3.9	2	14	3.7	2	4.1	2	82.4	7.9	0.0		6	3.8	3.5
11	Existing Lock	N/A	6.7	6	2	5.1	2	16.7	2	5.3	2	8	2	5.1	2	14	5.9	2	5.3	2	94.2	11.8			8	8	3.5
	Loc 2	N/A	N/A	N/A	N/A	N/A	N/A	N/A	N/A	N/A	N/A	N/A	N/A	N/A	N/A	N/A	N/A	N/A	N/A	N/A	N/A	N/A	N/A		N/A	N/A	
	Loc 3	N/A	6.7	6	2	5.1	2	16.7	2	5.3	2	8	2	5.1	2	14	5.9	2	5.3	2	94.2	11.8	0.0		8	8	3.5
																					Average Time Difference (Min.) =		-1.0				

Notes:

Columns 4 and 5 are reported in LPMS data for existing locks as a single value called "Chamber Entry". The values shown here for Chamber Entry are those from LPMS minus the estimated time of 6 min. for uncoupling which is included as Column 5.

Columns 6, 7, and 8 are reported in LPMS data for existing locks as a single value called "Chambering Time". The sum of the steps reported here equals those chambering times.

Columns 17 and 18 are reported in LPMS data for existing locks as a single value called "Exit - Fly, Exch, or Trnbk". The values shown here for Exit are those from LPMS minus the estimated time of 14 min. for recoupling which is included as Column 17.

For many of the steps the standard deviations were not known. Therefore the overall standard deviations (Column 27) is under-represented, especially for the Existing Locks (which have more steps).

Some of the items were not specifically studied. This was generally because there's no good way of estimating the time changes and because refining those steps would make little difference in the total lockage time.

Exit times for turnback lockages(Column 20) where estimated by using the exit of a single plus 3.4 minutes. The 3.4 minutes is the additional time required to move the extra 600 feet of tow (moving 2mph) over the sill. The methodology was compared with movements at L/D 26 auxiliary and main chambers which verified the estimations.