UMR-IWW SYSTEM NAVIGATION STUDY

INTERIM REVISED LOCK EXTENSIONS DESIGN CONCEPTS

Interim Report

18 July 2000

UMR-IWW SYSTEM NAVIGATION STUDY
INTERIM REVISED LOCK EXTENSIONS DESIGN CONCEPTS

1. PURPOSE 1

2. BACKGROUND 1

A. PURPOSE OF UMR&IWW SYSTEM NAVIGATION STUDY 1
B. PURPOSE ENGINEERING EFFORT 1
C. ENGINEERING STRATEGY FOR THE DEVELOPMENT OF INITIAL LOCK DESIGN CONCEPTS: 2
D. RESULTS OF INITIAL LOCK DESIGN CONCEPTS 2
E. NEED TO REVISIT CONCEPTUAL LOCK DESIGNS 3

3. REVISED CONCEPTS 3

A. GENERAL 3
B. SAFETY CONCERNS 5
C. LOCK FLOOR AND SILL DEPTH 5
D. PILE FOUNDATIONS FOR RIGID MONOLITHS 5
E. FILLING AND EMPTYING SYSTEM 5
F. SHORTER DOWNSTREAM GUIDEWALL: 6
G. USE OF ANCHORS FOR PERMANENT WALL CONSTRUCTION: 6
H. REUSE OF THE EXISTING GUIDEWALL AS A LOCKWALL (LOCATION 2 ONLY): 7
I. NO MODIFICATIONS TO UPSTREAM GUIDEWALL:(LOCATION 2 ONLY) 7

4. DESCRIPTION OF REVISED SAND FOUNDED CONCEPTS 7

A. LOCATION 2 7
B. LOCATION 3 10

5. DESCRIPTION OF REVISED ROCK FOUNDED CONCEPTS 13

A. LOCATION 2 13
B. LOCATION 3 15

6. IMPACTS TO NAVIGATION 17

A. LOCATION 2 17
B. LOCATION 3 17

7. COST 18

8. CONCLUSION: 19

Attachments

Attachment 1: Plates
Attachment 2: Cost Estimates
Attachment 3: Construction Schedules

UMR-IWW SYSTEM NAVIGATION STUDY
INTERIM REVISED LOCK EXTENSIONS DESIGN CONCEPTS

1. Purpose

The purpose of this interim report is to outline efforts of the Engineering Work Group to significantly reduce the costs of impacts to navigation during construction for the lock extension alternative. This effort is an extension of the work documented in the Upper Mississippi River-Illinois Waterway System Feasibility Study-Engineering Appendix, Draft, dated November 1997 and the Large Scale Measures of Reducing Traffic Congestion, Conceptual Lock Designs, dated July 1996.

2. Background

A summary of the two reports referenced above is provided to establish a baseline for comparison of the new concepts being presented. The concepts presented in the referenced reports will be defined as Initial Lock Design Concepts. The new concept presented will be defined as the Revised Lock Extension Design Concept.

a. Purpose of UMR&IWW System Navigation Study

The Upper Mississippi River & Illinois Waterway System Navigation Study is a feasibility study addressing navigation improvement planning for the Upper Mississippi River and Illinois Waterway (UMR&IWW) system for the years 2000-2050. This study assesses the need for navigation improvements at 29 locks on the Upper Mississippi River and 8 locks on the Illinois Waterway and the impacts of providing these improvements. The principal problem being addressed is the potential for significant traffic delays on the system within the 50-year planning horizon, resulting in economic losses to the nation. The study is to determine whether navigation improvements are justified. If so, the study shall provide appropriate navigation improvements, sites, and sequencing for the 50-year planning horizon.

b. Purpose of engineering effort

The overall purpose of the engineering work for this system feasibility study is to establish an array of engineeringly feasible navigation improvement measures, their associated costs, and their benefits in terms of improving the navigation conditions and lock performance. The efforts completed to date are conceptual in nature. Additional engineering and design will be required from a site-specific standpoint. These inputs are being developed in close coordination with the other disciplines involved in the study. The improvement measures include both small scale and large-scale alternatives for reducing traffic congestion.

1. Small-Scale Measures of Reducing Traffic Congestion

"Small-scale" measures of reducing traffic congestion can generally be defined as any navigation improvement less costly than constructing a new 1200-foot lock. Small-scale measures would reduce congestion by reducing the time required for certain steps in the lockage process, resulting in a reduction in total transit time. Details of these measures

can be found in the, Detailed Assessment of Small Scale Measures, Interim Report, dated July 1997.

2. Large-Scale Measures of Reducing Traffic Congestion

This effort established engineeringly feasible conceptual designs, and the associated costs, for adding new locks at several alternative locations at a typical rock-founded lock and dam and at a typical pile-founded lock and dam. Six alternative lock placements were considered at each of 16 existing lock and dam sites identified in the reconnaissance studies as having the potential need for new lock construction. Three different design types at each lock location and a variety of lock sizes were also considered. No new dams were considered for this study. Once the array of lock concepts was developed, a screening process ensued. Obtaining cost savings over traditional designs was a paramount goal in developing the initial lock design concepts. Details of these initial lock designs concepts can be found in the Engineering Appendix and Conceptual Lock Designs Report referenced above.

c. Engineering Strategy for the Development of Initial Lock Design Concepts:

Developing lock designs of reduced cost compared to traditional locks was a paramount objective. As such, several innovations were explored and developed, resulting in substantial savings. To give the plan formulation process a more comprehensive array of measures, three different lock types were developed (designated Types A, B, and C). These range from locks of traditional lock construction (with high performance) to locks of a lower cost with trade-offs in performance. All lock designs were required to comply with two governing rules: 1) No locks will be considered that would be unsafe, and 2) No locks will be considered whose performance cannot be predicted.

d. Results of Initial Lock Design Concepts

This investigation determined a number of conceptual lock designs that are feasible from an engineering perspective. Costs were presented for each alternative and location under consideration. First costs for 1200-foot-long locks of traditional construction ("Type A's) were estimated to be from $206,000,000 to $520,000,000. First costs for the Type B and C locks were estimated to be between $110,000,000 and $283,000,000. These costs are location and site specific and do not include any impacts to navigation during the construction process. At any given site, the location that results in the lowest first cost is the extension of the existing 600' lock to 1200'. For example, at Lock and Dam 25, a new 1200' lock in the dam is estimated to cost approximately $283,000,000. A lock can be built in this location with no impacts to navigation. Extending the existing lock to 1200' is estimated to cost $160,000,000, however the impacts to navigation from required lock closures to complete the construction are estimated to be in excess of $50,000,000 for extending the existing lock at 25. The risks and uncertainties of building a lock extension are also greater than building a lock away from tow traffic. By building the new 1200-foot lock in the auxiliary gate bay, location 3, the initial cost is increased to 196,000 million. However, much of the lock can be constructed without interference to existing navigation. The results of this investigation highlighted the need for continued engineering and design with a focus on significantly reducing the impact costs to

navigation during construction of a lock extension. A primary intent of the revised lock concepts was to reduce the impacts to navigation during construction.

e. Need to Revisit Conceptual Lock Designs

The preliminary evaluation of alternatives during the plan formulation process indicated that construction of new 1200-ft locks at the sites identified in the Reconnaissance studies were not likely in the foreseeable future. The only potential economically feasible alternative appeared to be extension of the existing locks (location 2) and extension of the auxiliary gate bays (location 3). An additional effort was undertaken to more fully evaluate the location 2 and 3 alternatives. The details of this evaluation are outlined below.

3. Revised Concepts

a. General

The supplementary effort to reduce lock construction costs focused on a review of the previous work to determine if additional savings could be obtained with little to no loss in performance. For location 2, the revised lock concepts addressed five items with the intention of reducing impacts to navigation and the first cost of construction of the lock extension.

1. The new culverts are not extended into the new extension.
2. The existing intermediate wall is extended with a concrete filled sheet pile structure.
3. The existing guidewall is modified for reuse as a lockwall.
4. The new lower guidewall is shortened to 600 feet and consists of concrete beams spanning between cells.
5. The new lower gate monoliths are prefabricated units that are placed in the wet.

Similar to the process outlined in the Lock Concept Design Report, prototype rock and sand founded sites were used to develop the new concepts. Lock 25 was used as the representative sand founded site and Lock 22 as the rock founded site. A review of the biggest cost items was completed for locations 2, 3, and 4. It became apparent very quickly that refinements to the lock extension alternative (location 2) could yield the greatest benefits to reducing costs. This became the focus of the refinement. It was also recognized that some additional departures from standard criteria, policy and practice would result in the maximum amount of savings. The departures included raising the lock floor, not extending the filling and emptying system into the new extension, reusing the existing guidewall and shortening the new guidewalls from 1200 to 600 feet. Table 1 contains a listing of the original departures from criteria or standard practices that were explored in the initial lock design concepts. The departures from criteria for the revised lock extension design concept are also provided in Table 1 for comparison. The criteria for the revised lock extension design concept still uses the founding principles that designs will be safe and that a design will include predictable performance. The descriptions of the departures from criteria for the revised lock extension design concept are outlined below.

Concerns over impacts to navigation during construction at location 2 presented a strong case for reopening investigations to find savings for construction at location 3. With regards to impacts to navigation, the engineering work group realizes the risks associated with location 3 are less than location 2. Thus refinements to location three were considered after the location 2 refinement effort. The Location 3 refinement looked at modifying the initial Location 3, Type C lock concepts. The location 3 effort focused on the following items in a effort to reduce the first cost of the lock.

1. Shortening the downstream guidewall to 600'
2. Raising the lock sill elevation to 1.33 D and the lock floor elevation 1.33D +2 which is the same as the existing lock.
3. Resist lateral loads on lock wall with large diameter pipe piles which allows removal of floor beams and corresponding piling (downstream half of chamber, only).
4. Eliminate downstream approach wall and apron slab and replace with a protection cell.
5. Salvage portion of upper guard wall to reduce length of constructed upper guide wall
6. Reduce the floor slab thickness and simplify filter system to a design similar to the existing locks.
7. Scheduling the construction to reduce impacts to navigation.

Table 1: Common Lock Design Criteria

	Initial Lock Designs			**Revised**	
	A	**B**	**C**	**Location 2 Concept**	**Location 3 Concept**
Depth to upper sill	2d	1.7d	1.7d	1.38d	1.33d
Depth to lower sill	2d	1.7d	1.7d	1.38d	1.33d
Chamber floor depth d ("Submergence")	2d+2	1.7d+2	1.7d+2	1.38d+2	1.33d+2
Filling and Emptying Times	Less than 20 minutes (w/ 5.0 ton max. hawser force)			5.0 ton max. hawser force	
Usable chamber length	1200' alternatives for all Lock Types				
Chamber width	110'				
Lockwall stability	Compliance with ETL 1110-2-256				
Dewaterable	Yes				
Top of Lockwalls	Same as existing lockwalls				
Cofferdam Height	0.10 probability flood + 2 ft. freeboard				
Load for dewatered lock	15 % duration elevation				

b. Safety concerns

The original concepts developed for new lock construction included improvements in safety wherever possible. This refinement of concepts assumed that existing conditions were sufficient to define acceptably safe conditions. The existing conditions refer to lock approaches, lock exits, and filling/emptying criteria, etc. Details of these conditions are outlined below.

c. Lock floor and sill depth

At location 2, the sill for the downstream miter gate will be approximately 1.38d at most sites. At location 3, the sill depth has been set at 1.33d. The depth at the lock floor will be the sill depth plus 2 feet. The existing locks on the Upper Mississippi River generally operate with minimal problems when these conditions exist. Problems with the "piston effect" and "flow dispersion" at Mississippi River Locks would be mitigated by modified operating procedures. The benefits of using the higher elevations for the floors results in minimum excavation and reduced lock wall heights. Therefore, it reduces the time to construct the lock floor and walls. For location 2, no change to the lock floor elevation also allows for reuse of the existing guidewall as a lockwall. The higher floor elevation has several disadvantages, but impacts are minimal. The revised concepts do not change the current operating conditions with respect to the water depths and tows entering the chamber.

d. Pile foundations for rigid monoliths

Traditionally, sand founded lockwalls on the Upper Mississippi River have had timber pile foundations. The initial lock design concepts included pile foundations for most alternatives. Proposed lockwalls for Location 3 will be founded on piles similar to the initial lock design concepts, except piles will be designed to resist lateral loads. Where possible, the proposed lockwalls will be founded on sand with no pile support. The lockwalls for the sand founded conceptual design is composed of cellular sheet-pile walls. Typically, a rigid wall such as this would be founded on piling to satisfy stability and settlement criteria. The cells are sized to obtain acceptable foundation pressures along with satisfying other stability criteria. The concrete forms a rigid substrate for the attachment of precast panels that form the face of the lock chamber. The benefits of not using bearing piles are related to reduction in placement time that minimizes impacts to navigation and a reduction in the overall construction costs. The disadvantage is that small amounts of differential settlement will have to be accounted for in the detailed design process.

e. Filling and emptying system

The initial lock design concepts were traditional in nature, but did not try to optimize filling/emptying times. These designs did comply with guidance to keep hawser forces within acceptable limits. The filling and emptying systems for the revised lock extension design concept are a departure from standard practice. For the location 2 concepts, the lock filling system will use the existing intake manifold, intake valves, and ports into the chamber. Essentially, the 1200-foot lock at Location 2 will be filled with the system designed for the 600-foot lock. No new culverts or ports will be located in the new lock

extension. A conservative design in the original system makes this possible for the relatively low maximum heads of about 15 feet on the system. To maintain acceptable hawser forces of 5 tons inside the chamber, the filling valve time will be slowed. For the 50% duration on the tailwater-rating curve, times to fill a 1200-foot lock will be about 6 to 8 minutes longer than to fill a 600-foot lock. For location 3, a through the lock wall filling system will be used to fill the lock chamber. The filling system will extend the entire 1200-foot lock chamber with performance similar to the initial design concepts. For both locations 2 and Location 3, alternatives, the emptying the chamber will be accomplished and/or augmented by gated openings in the downstream miter gate monolith. Increases in emptying times will at most be increased by an increment close to the filling time increase. For Location 2, slower filling and emptying times will reduce performance, which are considered in the economic analysis. The benefits of this concept allows reduction in the complexity of the lockwalls, which significantly reduces the construction time, and intern reduces the cost of impacts to navigation as well as the overall construction cost. This also significantly reduces the impacts to navigation during construction. The disadvantages of this concept are slower filling and emptying times.

For the low head lifts present on the lower, five sites. Filling and emptying times are a minor component of the overall lockage process. Buy using a longer chamber the filling and emptying time become less critical because other components of the lockage process consume more time the time to filling or empty the chamber.

f. Shorter Downstream Guidewall:

The initial lock design required 1200’ downstream guidewalls at all locations, coupled with channel improvements for the downstream approach. The revised concept proposes the use of a 600’ downstream wall, coupled with channel improvements for the lower approach. Currently, on the UMR 1200ft Tows approach and enter lock chambers with 600ft guidewalls. Standard practice in the Corps has been to use 1200ft or 900ft guidewalls with 1200ft chambers in order to improve lock approaches and exits. The 600ft guidewall for a lock extension will in most cases equate to the same safety conditions that currently exist. Channel improvements will be constructed to optimize lower approaches and exit conditions, while trying to improve safety. The details of the channel improvements and final wall length are highly dependent on site specific conditions. The benefits of the shorter downstream wall are reductions in cost and impacts to navigation and possibly impacts to the environment.

g. Use of Anchors for Permanent Wall Construction:

The initial lock designs used no rock anchors to meet stability criteria. Only existing structures have been stabilized to meet existing criteria with post- tensioned high capacity rock anchors. No new structures have been built utilizing rock anchors to ensure the stability of the structure. The proposed rock founded alternative uses rock anchors to satisfy stability criteria. The anchors are required only for the dewatered load case. All other load cases are stable without the additional force provided by the anchors. Since, the locks are only dewatered occasionally a certain percentage of the anchors could be tested to ensure their adequacy before the lock is dewatered. In short the anchor system is testable, maintainable and is only needed during dewatering of the lock chamber. The

benefits of the new concept are that it significantly reduces the size of the cells needed for the intermediate wall. The smaller size reduces construction duration, and materials required. This allows the wall to be constructed during a winter closure with little impacts to navigation. The disadvantages are that if anchors were proven inadequate, opportunities for maintenance dewatering would be delayed or otherwise affected.

h. Reuse of the Existing Guidewall as a Lockwall (Location 2 Only):

The initial lock design concepts required removal of the existing guidewall to allow for construction of a new lockwall with a filling culvert. This concept resulted in significant impacts to navigation during construction. In the revised lock extension concept, the existing downstream guidewall will be reused by incorporating it into the landwall. The guidewall is generally in acceptable condition for reuse as a lock wall-rubbing surface. The wall will be modified so that it will resist lateral loads normally imparted to lockwalls. Design considerations for the composite wall include dewatered and normal load cases, grouting the timber crib, bridging between the cells and guidewall, and rehabilitation of the guidewall. Reusing the guidewall has risks associated with it. The condition of the guidewall could be discovered to be worse than reported in periodic inspections and/or the timber crib on which it is founded could be found to be in poor condition during construction. Both situations can be addressed during design and construction. The benefits of reuse of the wall are that the lock landwall extension can be constructed with little impacts to navigation.

i. No Modifications to Upstream Guidewall:(Location 2 only)

The revised concept proposes no work on the upper guidewall. Channel improvements will be made to improve approach conditions into the lock with the use of the existing 600-foot guidewall.

4. Description of revised sand founded concepts.

a. Location 2

This concept will consist of extending the intermediate wall with sheet pile cells filled with concrete. The proposed landwall construction reuses the existing guidewall as a lockwall. The existing guidewall is stabilized with a structure constructed behind and connected to the wall. The lower gate monolith will be U-framed, precast concrete float-in structure. The gate monolith will be floated in, sunk onto landing pads and underbase grouted. The monolith will be pile founded and filled with concrete. The existing filling and emptying system will not be extended into the new portion of the chamber. The existing system will be used to fill the extended chamber. To empty the existing chamber, the intermediate wall portion of the existing system and a gated structure in the new gate monolith will be used. The lower guide wall will consist of prestressed, precast concrete beams spanning approximately 100-foot between sheetpile cells. This design is non-ported and based on the design used at Winfield Lock and Dam on the Kanawha River. The existing lower sill will be removed and the lower gates either secured in place or removed. Preliminary drawings for the revised, lock-extension concept on a sand foundation are included on Plates P1D1 through P3D5.

1. Hydraulic Features

a) Filling System

The filling system would consist of the existing intakes, valves, culverts and ports to fill the extended chamber. The system would not be extended to the new portion of the chamber. Valve opening times would have to be increased to keep hawser loads within established criteria. Otherwise, not having a balanced distribution system in the lock has the possibility of producing large hawser forces during the filling of the chamber. To evaluate the filling conditions, the TVA model TFSIM was used. TFSIM is a one dimensional, numerical model for simulating unsteady flow in the filling and emptying system of a lock. In the model, simulations where performed for maximum and typical (50% duration) lifts. The valve time was varied to determine the fastest filling obtainable (with out producing excessive hawser forces greater than 5 tons). The model considered hawser forces for both 600-foot and 1200-foot tows. For the 50% duration on the tailwater-rating curve, times to fill a 1200-foot lock will be about 6 to 8 minutes longer than to fill a 600-foot lock.

b) Emptying System

The emptying system would consist of part of the existing system and part of a new system. The parts of the existing system to be used for the proposed system are the valve, culverts and ports, located in the existing intermediate wall. A new outlet port would be constructed on the riverside of the existing intermediate wall and would connect to the existing system. Additionally, new culverts placed into the new lower gate monolith would be used to supplement the existing system. The increases in emptying times are expected to be similar to the increases in filling times. Not having the culverts extend into the new extension simplifies the construction of the new lockwall and allows reuse of the existing guidewall.

2. Geotechnical Features

a) Foundation conditions

Foundation conditions used in design of the lock features were the same conditions that were used for alternatives in the initial Lock Concepts Design Report and The Engineering Appendix.

b) Site preparation

Preparation of the existing site would consist of removing silt, scour protection, and debris from the site where the structure will be constructed. Backfill behind the existing guidewall would be partially excavated to allow construction of the new landwall. After the riverwall, landwall, and gate monoliths are constructed, the dewatering wells would be activated and the chamber would be pumped. The chamber floor would then be rough graded and ready for lock floor construction.

c) Scour protection

The site would have to be protected from scour during construction of the lock extension. Quantities included in the cost estimate include riprap for both temporary and permanent scour protection for new and existing structures.

d) Sheetpile cutoff

(1) Tie- in to existing cut-off

The tie in to the existing cut-off would be accomplished with details similar to details in the Lock Concepts Design Report. The cut off is established by driving a row of sheet piles parallel to the existing piles. The area between the two rows of sheet piles is chemically grouted to create a plug, which forms the seepage cut off.

(2) Seepage cut-off

For both the intermediate and land wall, the outer portions of the sheet pilling will be driven to deeper elevations to form the seepage cut-off. Special considerations will be taken to ensure that the different length sheet pile remain in interlock caused be eccentric pressures on the extended sheet piles.

e) Dewatering system

The dewatering system used is a deep well system similar to the system currently in place at Mississippi River Locks 25 and 10. Wells are placed into the center of the sheet pile cells and extend to the level of the sheet pile cut-off. The dewatering system will prevent uplift force on the look floor when the lock is dewatered.

3. Structural Features

a) Lockwalls

(1) Landwall

The landwall will be formed by placing sheetpile cells behind the existing guidewall to form a composite section. The existing guidewall will be used as the rubbing surface. Sheet pile cells will be placed behind the existing guidewall. The cells serve two purposes. One the cell will provide lateral resistance for load normally imparted to lockwalls. Two, the cells will provide a seepage cut-off for dewatering of the lock chamber. The cells will be filled with sand or other low cost material. The existing timber crib will be grouted to increase the structural integrity of the crib. Modifications to the existing guidewall include, raising it to the top of the existing lockwall, and adding lockwall appurtenances such as mooring posts and ladders. The void between the new cells and the existing wall will be filled with lightweight structural concrete. Additional piling will be added to help carry the vertical load of the new concrete. Most of the landwall will be constructed without interference to navigation.

(2) Intermediate wall

The intermediate wall extension will be constructed of cellular sheet pile cells filled with concrete. The sheet piling will be driven with sacrificial templates to remain in the completed cells and aid in speed of placement. The rubbing surface for the cells will consist of precast panels attached to the face of the cells. The panels will be attached after the lock is constructed and dewatered. The top of the wall will be constructed of cast-in-place concrete.

(3) Intermediate wall transition

The intermediate wall extension cells will be continued on the riverside of the intermediate wall to provide lateral stability for the two existing end monoliths and provide a place to tie-in with the existing cut-off. The transition will incorporate the existing bull nose to reduce demolition and impacts to navigation. Details will be developed to allow discharge of the culvert in this area.

b) Downstream gate monolith

The downstream gate monolith is a float-in module that will contain the gate anchorages, emptying ports, and culvert and lock bulkhead slots. The module is floated in, set on landing pads and then the base will be under grouted. Traffic will be allowed to pass through this structure. Concurrent with navigation, the foundation piles are installed, the walls filled with concrete, and machinery is installed into the monolith. During another closure, the new gates would be installed.

c) Downstream guidewall

The lower guide wall will consist of approximately 10-foot by 10-foot prestressed, precast concrete beams spanning approximately 100-feet between sheetpile cells. The design of the beams is based on designs used at Winfield Lock and Dam on the Kanawha River. The beams are supported vertically by 48-inch diameter high-capacity pipe piles. The beams are supported against lateral impact loads by gravel filled cellular sheet pile cells placed landward of the beams. The beams are attached to cells with anchors passing through the cells.

d) Floor

The floor will consist of a concrete floor slabs on top of an aggregate filter. Uplift forces on the floor will be reduced by the deep well dewatering system. The floor will be structurally independent of the of the lockwalls.

b. Location 3

The revised concept for location 3 is similar to the original 3C concept proposed in the Conceptual Lock Designs Report. The 3c was modified to reduce cost and impacts to navigation during construction. The walls are cast in place concrete monoliths constructed in a stay-in-place sheet pile cofferdam. The several modifications are made to the original 3C design. The down stream guidewall was shortened to 600 feet. The sill depth was raised to 1.33D, and the floor was raised to 1.33D plus 2 feet. This is the same as the current locks. The foundation was modified to have fewer but larger piles that had

sufficient capacity to eliminate floor struts. The floor system was also simplified. As with location 2, construction scheduling was modified to reduce impacts to navigation. Drawings of the sand-founded design are provided in plates 3R-P-1 through 3R-P-4.

1. Hydraulic Features

a) Filling system

The filling system is similar to the initial lock design concepts. In general, the filling system would include plugging ports from the existing intermediate wall and rerouting them to the new 1200 foot chamber. The culverts and associated filling ports would be similar to the existing main lock and extend the entire length of chamber.

b) Emptying system

The initial lock design concepts included emptying ports in the downstream approach walls. The proposed design concept deletes the approach walls and moves the emptying ports from the approach walls to gate monolith. The emptying system will consist of culvert valves and emptying ports located within the gate monolith walls. It is expected that this system will have slightly increased emptying times due to the decreased discharged area. Emptying times are a small component of the overall lockage process. .

2. Geotechnical Features

a) Foundation conditions

The foundation conditions at lock 25 consist primarily of sands generally increasing in coarseness with depth. For location 3, a large scour hole is present downstream of the dam which will require some of the lock to be constructed on fill. As with the other Location 3 alternatives, quantities were included in the cost estimate to fill the scour hole and armor it with riprap or capstone. Quantities the Location 3, Type C lock extensions were used for the estimate.

The lock walls are founded on 48-inch diameter pipe piles that are designed to resisted lateral movement of the lock walls. The pile capacities were based on a loose density sand and are assumed to be founded on rock at Elevation 325. Depending on final pile test and sand density, there is a high potential for the larger pile to be founded at some distance above the rock elevation.

b) Site preparation

Site preparation would consist of filling the scour hole. The footprint of the structure would be excavated to approximately elevation 398.5. This will allow the sheet pile walls to be constructed with minimal excavation from within the sheets. The excavation under the floor will provide space for the leveling stone and gravel filter under the concrete slab. Excavation quantities were not calculated and the quantities from the Location 3, Type C lock extensions were used for the estimate.

c) Scour protection

The site would have to be protected from scour during construction of the lock extension. Quantities included into the cost estimate include riprap for both temporary and permanent scour protection for new and existing structures. Quantities were not calculated and the quantities from the Location 3, Type C lock extensions were assumed for the estimate.

d) Sheetpile cutoff

(1) Tie in to existing cut-off

The tie-in to the existing cut-off would be accomplished with details similar to details in the Lock Concepts Design Report. The cut off is established by driving a row of sheet piles parallel to the existing piles. The area between the two rows of sheet piles is chemically grouted to create a plug, which forms the seepage cut off.

(2) Seepage cut-off

For both the intermediate and riverwall, the outer portions of the sheet pilling will be driven to elevation 360 to form the seepage cut-off. Special considerations will be taken to ensure that the different length sheet pile remain in interlock caused be eccentric pressures on the extended sheet piles. The cut-off will reduce uplift pressure inside the lock chamber during dewatering.

(3) Dewatering System

The dewatering system will be similar to location 2 type C. The dewatering systems is filter and sump scheme and will facilitate both maintenance dewatering of the lock and facilitate construction of the lock. The dewatering system will help for construction of the filling systems and the lock floor in the dry.

3. Structural Features

d, Lockwalls

The intermediate and river lock wall extensions were similar to details shown in the Lock Concepts Design Report. The wall extension in the lower portion of the chamber had reduced wall heights due to raising the elevation of the lock floor. The lockwalls are of gravity type founded on piles (see Plates 3R-P-3 and 3R-P-4) which are faced precast concrete rub panels.

Stability calculations were performed for lock dewatering. Lateral loads for the lockwalls in the lower portion of the chamber are resisted by the pipe pile foundation allowing the floor struts and associated piles to be deleted. The existing intermediate lock wall requires floor beams, which act as, both compression struts and tension ties to resist lateral movement. The sheet pile was neglected in the stability calculations. Further study including the resistance provided by the sheet pile could reduced the number of bearing piles.

b) Downstream gate monolith

The lower miter gate monolith will be similar to the initial lock design concepts for Location 3, Type C. The monolith is constructed with conventional methods within a braced sheet pile cofferdam. Concrete quantities were decreased due to raising the sill elevation. The braced cofferdam would be in-place for several months increasing the risk of impact during construction. The float-in option could reduce the risk, since much of the construction is offsite and float-in time is relatively short. Although the float-in monolith is preferred, the costs are comparable to the cofferdam option and the details were not changed for this revision.

c) Upstream guidewall

The upstream guidewall will be 1200 feet long. The wall will be located on the riverside of the approach. This is similar to the other location 3 design used in the original conceptual designs, except a portion of the upper guard wall is salvaged and incorporated into the new wall. Approximately 275 feet of guard wall is reused, thus reducing costs of new guide wall and reducing demolition costs of the existing guard wall. Though details for the upstream guidewall are not provided, cost of the upstream guidewall will be included into cost estimates for the revised designs.

d) Downstream guidewall

The downstream guidewall will be shortened from 1200 feet to 600 feet. This was decided based on meeting of the engineering work group. This was decided to illustrate the savings associated with a shortened downstream guidewall. As with the upstream guidewall, the details for the location 3 design are not included but it is assumed that the design developed in the original design concepts will be utilized and similar unit costs will be used.

e) Floor Pavers and Floor Beams

The floor beams and associated piles were removed from the lower portion of the lock chamber. The floor thickness was reduced from 3-foot to 1.5-foot thick cast-in-place or precast concrete floor over a 2-foot thick gravel filter and geotextile fascine mattress. This is similar to the existing floor on many UMR locks except for the use of the geotextile. The floor will contain weep holes to relieve uplift pressures. A one-foot layer of leveling stone will be required in the upper portion of the chamber to facilitate floor beam installation. After the walls are constructed, the mitergate monolith is in place, the floor beams installed, the gravel filter would be placed in the wet. After the gravel filter is in place then the lock could be dewatered. After dewatering, the site would be graded and the floor installed.

5. Description of revised rock founded concepts.

a. Location 2

The intermediate wall of the existing lock will be extended with concrete filled sheet pile cells while the landwall will be formed by strengthening the existing guidewall. The lower gate bay will be a prefabricated, concrete float-in unit. The existing filling and

emptying system will not be extended into the new portion of the chamber. The existing system will be used to fill the new extended chamber. The emptying system culvert will be part of the new gatebay monoliths. The downstream guidewall will be concrete filled cells with precast prestressed concrete beams spanning between the cells. The existing lower sill will be removed and the lower gates either secured in place or removed. Preliminary drawings for the revised lock extension concept on a rock foundation are included on Plates R2D1 through R2D4.

1. Hydraulic Features

The filling and emptying systems will be the same as the proposed sand founded structure

2. Geotechnical Features

a) Foundation conditions

Conditions are the same for previous concepts. Reference the Engineering Appendix or Lock Concepts Design Report.

b) Site preparation

The extended portion of the lock floor and the approach would require rock removal to match the existing chamber floor elevation. The amount of rock removal would of course be site specific. All the loose, weathered and fractured rock under the cells, sills and gatebay monoliths would be removed before construction of these items. For the prototype design at lock 22, two feet was used for this rock excavation quantity.

3. Structural Features

a) Lockwalls

(1) Landwall

The landwall will be constructed by modifying the existing guidewall. This will allow construction to proceed during the navigation season. At sites with a crib for the wall base, the earth behind the wall will be excavated to allow for a concrete cut off wall to be constructed at the elevation of the existing crib. Concrete will then be added to the wall to meet stability criteria. During the subsequent dewatering, the crib will be inspected to determine if grouting is required to increase the durability of the wall.

(2) Intermediate wall

The intermediate wall will be constructed of sheet pile cells filled with concrete. These cells will be constructed in the wet during the winter closure. Precast concrete panels will be attached to the wall for a rubbing surface during a subsequent lock dewatering. Tensioned rock anchors will be used in the cell design to meet stability criteria for the dewatered condition. All other load cases are stable without the anchors. The use of the anchors reduces the cell size and reduces the construction time as well as the cost. The

cells will be tied into the existing lock wall monolith on the upstream end and the new pre-fabricated float-in gatebay monoliths on the downstream end.

b) Downstream gate monolith

The gatebay monoliths will be precast float-in units with two units/monoliths for each wall. Rock will be excavated and landing pads constructed for the units to be seated on. The units will then be under base grouted and filled with concrete. The bulkhead sill will be constructed in the wet. This work will take place during winter closure. The miter gate sill and upstream bulkhead sill will then be constructed during the subsequent lock dewatering. The precast units will contain the emptying culverts.

c) Downstream guidewall

The lower guidewall will have concrete-filled steel cylinders as substructure units. The steel cylinders may be constructed off-site. Then, the cylinders may be rapidly placed and filled with fewer impacts to navigation than a conventional sheet pile cell. The basic design is based on the Winfield lock on the Ohio River, which is also founded on rock.

d) Floor

The floor of the lock will be natural rock.

b. Location 3

The location 3 will use steel cans for construction of the wall. The intermediate wall extension will be completed using the concrete filled cans. Precast panels cast onto the face will provide rubbing surfaces. The riverwall will be extended also using concrete filled steel cans with a precast concrete face on the new lock side of the wall. Both will use post-tensioned anchors for stability purposes. The filling and emptying system will consist of a centerline culvert. Lower mitergate system will be similar to location 2. The system uses prefabricated concrete units to form the gate monoliths. The mitergate anchorage and sills are constructed after the lock is dewatered. Preliminary drawings for the revised lock concept on a rock foundation are included on Plates R3D1 through R3D4.

1. Hydraulic Features

The filling and emptying system will consist of centerline culvert. The culvert enters the chamber through and intake in the riverwall. The culvert enters perpendicular to the sailing line so that the intake can be constructed using a local cofferdam. This will require only a small area to be dewatered. The outlet would be similar to the intake except that it will be incorporated into the mitergate monolith. This may require another local cofferdam because the outlet will below the base of the wall of the wall.

2. Geotechnical Features

a) Foundation conditions

The foundation condition at location 3 would be similar to location 2. For detailed description of the foundation condition, see the conceptual lock designs report.

b) Site preparation

Site preparation would consist primarily of silt removal. Rock excavation would take place to prepare the foundations of the new lockwalls. Rock excavation for the chamber floor would take place after construction of the lockwalls and mitergates in the dry.

3. Structural Features

a) Lockwalls

(1) Intermediate wall

To keep the existing lock open during construction and after the construction of the new lock, the total width of the wall was fixed at the same width as the existing intermediate wall. This wall is constructed of prefabricated steel cans filled with concrete. The rubbing surface is provided by hanging panels on the can and filling the annulus between the panel and cells with concrete. This would be completed in the dry after completion of the lock. To achieve the cells will be post-tensioned to the foundation with rock anchors. The anchors are required during dewatering and could be installed after construction of the wall and before dewatering of the new lock. The installation of the anchors can be installed without interference to navigation. Plate R3D3 shows section of the wall.

(2) Riverwall

The riverwall will be constructed similar to the intermediate wall for location 3. The wall structure will consist of anchored concrete filled cells. The rubbing surface will be formed by precast panels mounted on precast concrete beams spanning the arc between the cells. Plate R3D3 shows the details of the riverwall concept.

b) Downstream gate monolith

The downstream gate monolith will consist of a float-in precast gate monolith. The design will be similar to the location 2 alternative. Minor adjustments where made for the intermediate wall thickness and sill elevation differences for location 3. Plate R3D4 shows the details of the float-in monolith.

c) Guidewalls

The guidewalls for this concept assumed to be precast beams on concrete filled concrete cells. The details of the concept are being developed by the engineering work group for the small-scale site specific feasibility report. The EWG felt that is would be redundant to pursue a similar design at this time. The upstream guidewall is assumed to be a riverside 1200-foot guidewall. The downstream wall was assumed to be 600 feet long and it is also on the riverside of the approach. Quantities were roughly estimated using cells and beams as shown on Plate R2D3. This provided a reasonable estimate of the guidewall cost.

d) Floor

The floor of the rock founded chamber will be natural rock.

6. Impacts to Navigation

Estimation of navigation delays was developed from construction schedules for the revised lock extension concepts. Productivity and durations were developed from historical information and expert elicitation as part of the evolution of the Engineering Appendix. For each of the concepts described herein, a preliminary construction schedule was developed and affects to navigation were estimated. The schedules are attached for review in Attachment 2..

a. Location 2

The preliminary schedule indicates about 3 years of on-site activity for both the sand founded and rock founded cases. Helper boats and adjacent mooring facilities will be provided to aid navigation and reduce the effects of delays due to construction.

1. Sand founded

The delays to navigation during this period for the sand founded case will be as follows:

- Three winter continuous closures (97, 96, and 96 days)
- One 14-day continuous closure during the navigation season
- One 8-day continuous closure during the navigation season
- 515 Days of 9.4 minute delays to exchange lockages

2. Rock Founded

The delays to navigation during this period for the rock founded case will be as follows:

- Three winter continuous closures (90, 94, and 96 days)
- Twelve, 2-day continuous closures during the navigation season
- 546 Days of 9.4 minute delays to exchange lockages

b. Location 3

1. Sand Founded

The delays to navigation during the construction period for the location 3 pile founded case are as follows.

- Four winter continuous closures (90, 90, 94, and 90 days)
- 821 Days of 9.4 minute delays to upbound, exchange lockages
- 546 Days of 11.5 minute delays to downbound, exchange lockages.
- One 7-day continuous closure during the navigation season
- 271 days of emptying existing lock chamber with one culvert

2. Rock Founded

The delays to navigation during this period for the rock founded case will be as follows:

- Three winter continuous closures (81, 68, and 90 days)
- 684 Days of 9.4 minute delays to upbound, exchange lockages
- 594 Days of 11.5 minute delays to downbound, exchange lockages.
- 90 days of Emptying existing lock chamber with one culvert

7. Cost

Cost estimates prepared for these conceptual designs were prepared to the same level of detail as those presented in the Conceptual Lock Designs Report. The project element costs are based on 1996 prices and include 25% contingencies. These prices assume a capable and well-equipped contractor and include overhead and profit. Cost estimates for the revised lock extension concepts are attached for review. Cost Comparison with Other Alternatives for each of the lower five sites are shown in Table 2. The cost factors for the other locations and types (besides the revised lock extension concepts) are the lock design cost factors developed in the initial Conceptual Lock Designs Report. Cost factor for sites 22 and 25 were developed from conceptual designs produced herein and in the Conceptual Lock Designs Report. The Economic Work Group will convert the days of impacts to navigation into economic cost. The environmental work group is determining environmental cost associated with each lock type and location. The operations, maintenance, and the major rehab Costs reflect life cycle costs for each alternative.

The contingency factor has received much debate during the life of the UMR-ILWW Navigation study. In February 1996, the Conceptual Lock Designs report was released with the contingency factor set at 25%. This is above the recommended level prescribed in ER-1110-2-1302 which suggest a contingency level of 20% for feasibility level designs. The EWG group selected a more conservative level to account for lack of site specific information at the numerous sites included in the study. In July of 1997 the Engineering Appendix was released for Independent Technical Review (ITR). During the 1997 ITR a comment was received that suggested raising the contingency factor to 35% due to risks and uncertainties associated with innovative lock design and construction. At that time the comment was accepted and without further consideration the contingency factor was raised to 35%.

In January of 1998, in response to preliminary economic analysis, the revised lock extension effort was initiated. Initial results of revised lock extension effort were reported in March of 1998 with a 35% contingency factor. After review, is was determined that much of the revised concept used existing technology and only a small portion on the lock was considered innovative. The innovative construction techniques were limited to the float-gate monolith and steel can cell construction.

Concurrent with the UMR-ILWW navigation study, other efforts inside the Corps of Engineers have further reviewed innovative construction techniques under the Innovative Navigation Program. Examples of this effort include, but are not limited to, Braddock Dam replacement and the Olmstead Lock and Dam floating guide walls. Both of these projects employ floating, and float-in type, construction of precast concrete structures. The unit prices in these projects were compared with the current cost projections, and it was determined that the projected cost where reasonable. The steel can concept was successfully deployed for a protection cell at Lock and Dam 24. Based on the experience provided by these projects, many of the uncertainties associated with the innovative procedures have been alleviated.

Based on the success of other similar navigation projects employing similar innovative construction techniques, the EWG felt that reduction of the contingency factor from 35% to 25% was reasonable. Many of the unknown questions associated with innovative construction have been answered.

Table 2: Summary of Performance And Cost ($1000)

Lock Site/ Length	Lock Alternative	Type	First Cost (lock and guidewalls)[1]	First Cost Channel Work and Levees	Real Estate and Reloca-tions	Operation and Maint. (Present Worth)[2]	Major Rehab. (Present Worth)	Total Cost w/out Env or Impacts to Nav[3]
25	Existing Lock							
1,200ft		2R	$119,000	$1,000	$200	$0	$0	$120,200
	Loc 3	3R	$192,000	$1,000	$30	$6,700	$3,700	$203,430
22	Existing Lock							
1,200ft	Loc 2	2R	$97,000	$0	$30	$0	$0	$97,030
	Loc 3	3R	$128,000	$5,100	$30	$6,700	$3,700	$143,530

Notes:
[1] Cost estimates prepared for these conceptual designs were prepared to the same level of detail as those presented in the *Conceptual Lock Designs Report*. The project element costs are based on 1996 prices and include 25 percent contingencies.
[2] The Operations and Maintenance Costs and the Major Rehab Costs reflect only the incremental life cycle costs for each alternative discounted at 7.4 percent. Total O&M costs would be $13,100 million for Location 2 locks and $19,000 million for other locations leading to the existence of two locks. However, this $13,100 million associated with Location 2 would be required for O&M of the existing lock and as such does not represent a with-project cost.
[3] The total costs shown are not all inclusive. They do not include the costs related to environmental impacts, cultural impacts, or impacts to navigation during construction.

8. Conclusion:

The cost information contained herein, along with the performance data for each alternative will be provided to the Economic Work Group for incorporation into the NED Plan. The Economics Work Group will add the benefits of maintaining a second lock with new lock construction at locations 1, 3, and 4. This information will be incorporated into the final of the Engineering Appendix. The engineering feasibility of each of the alternatives presented has been determined; however, this does not constitute full consideration of the plan formulation criteria of completeness, effectiveness, efficiency, and acceptability.

Attachment A: Plates

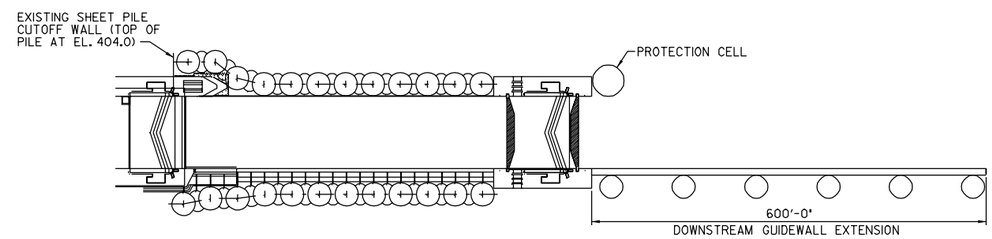

PLAN

SCALE: 1" = 100'

100' 0 100'

Revisions			
Symbol	Description	Date	Approved

U.S. ARMY ENGINEER DISTRICTS
CORPS OF ENGINEERS

ROCK ISLAND, ILLINOIS
ST. LOUIS, MISSOURI
ST. PAUL, MINNESOTA

US Army Corps
of Engineers
Rock Island District
St. Louis District
St. Paul District

UPPER MISSISSIPPI RIVER &
ILLINOIS WATERWAY SYSTEM
NAVIGATION FEASIBILITY STUDY
LOCATION 2

SAND FOUNDED
GENERAL PLAN

Scale:

Date:

PLATE P2D1

18-JUL-2000 07:34
e:*projects*ns00*relook*3 4 ftp*plate1.dgn

18-JUL-2000 07:34
e:*projects*ns00*relook*3 4 ftp*plate1.dgn

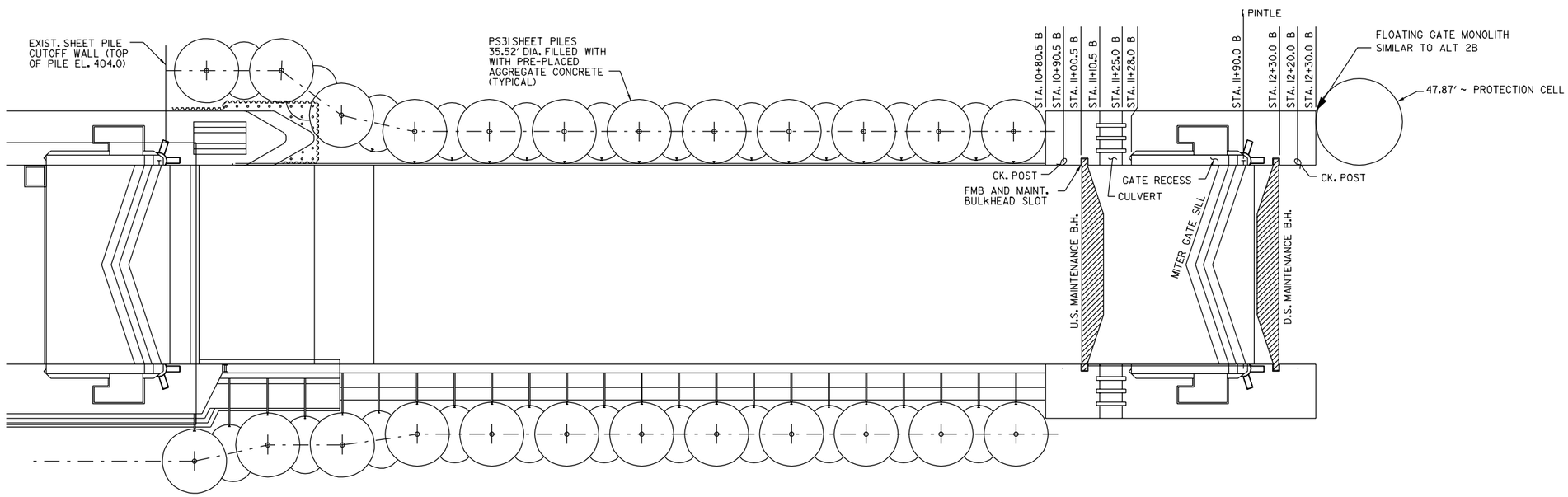

PLAN

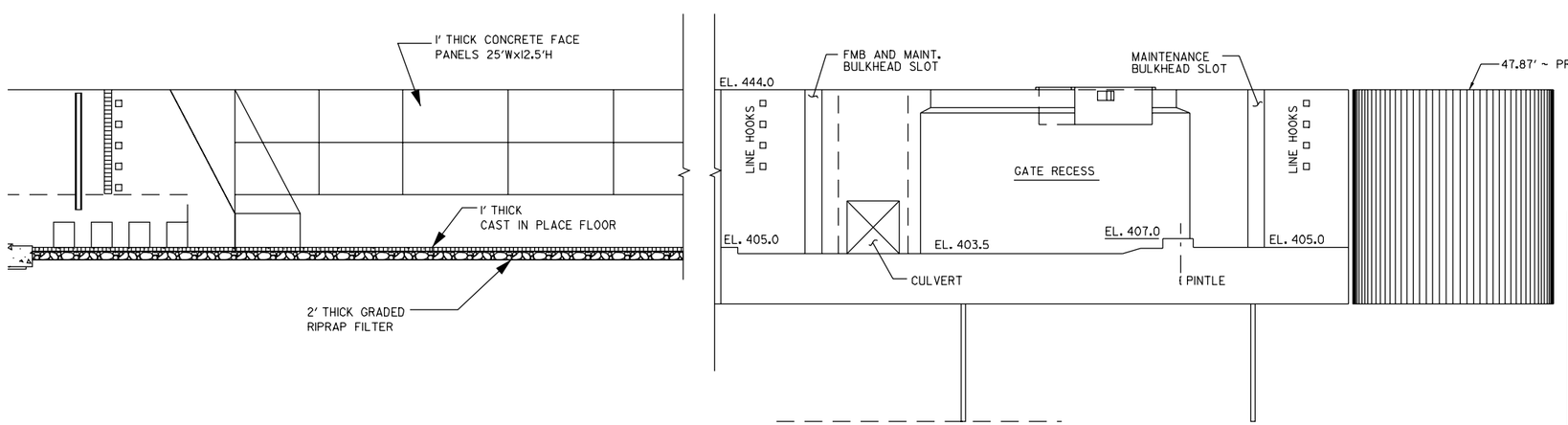

ELEVATION

DESIGN*FILE*SPECIFICATION

Revisions			
Symbol	Description	Date	Approved

U.S. ARMY ENGINEER DISTRICTS
CORPS OF ENGINEERS

ROCK ISLAND, ILLINOIS
ST. LOUIS, MISSOURI
ST. PAUL, MINNESOTA

US Army Corps of Engineers
Rock Island District
St. Louis District
St. Paul District

UPPER MISSISSIPPI RIVER & ILLINOIS WATERWAY SYSTEM NAVIGATION FEASIBILITY STUDY
LOCATION 2

SAND FOUNDED PLAN

Scale: 1" = 30'
Date:

PLATE P2D2

17-JUL-2000 15:39
e:\projects\ns00\relook\3 4 ftp\plate2.dgn

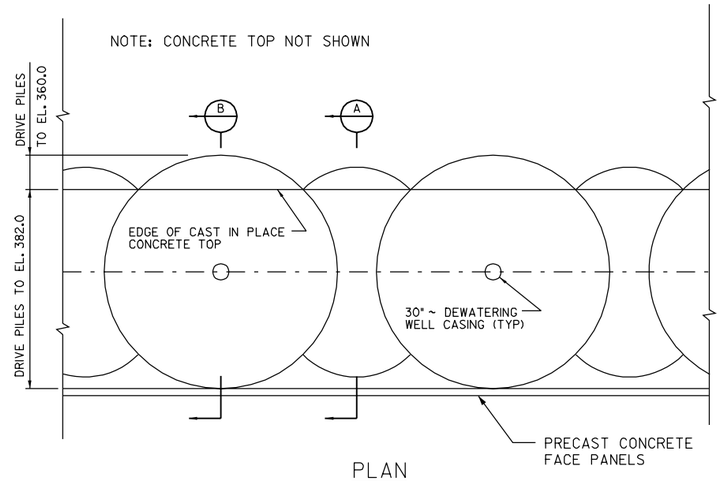

PLAN

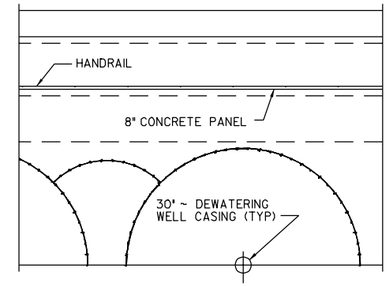

PLAN AT EL. 434.0

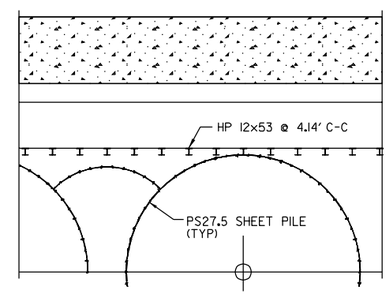

PLAN AT EL. 424.0

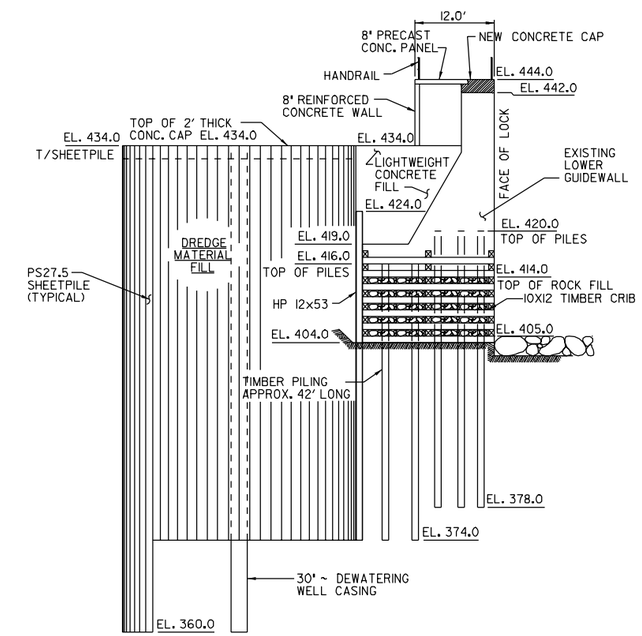

TYPICAL SECTION

LAND WALL EXTENSION

SCALE: 1" = 10'

10' 0 10'

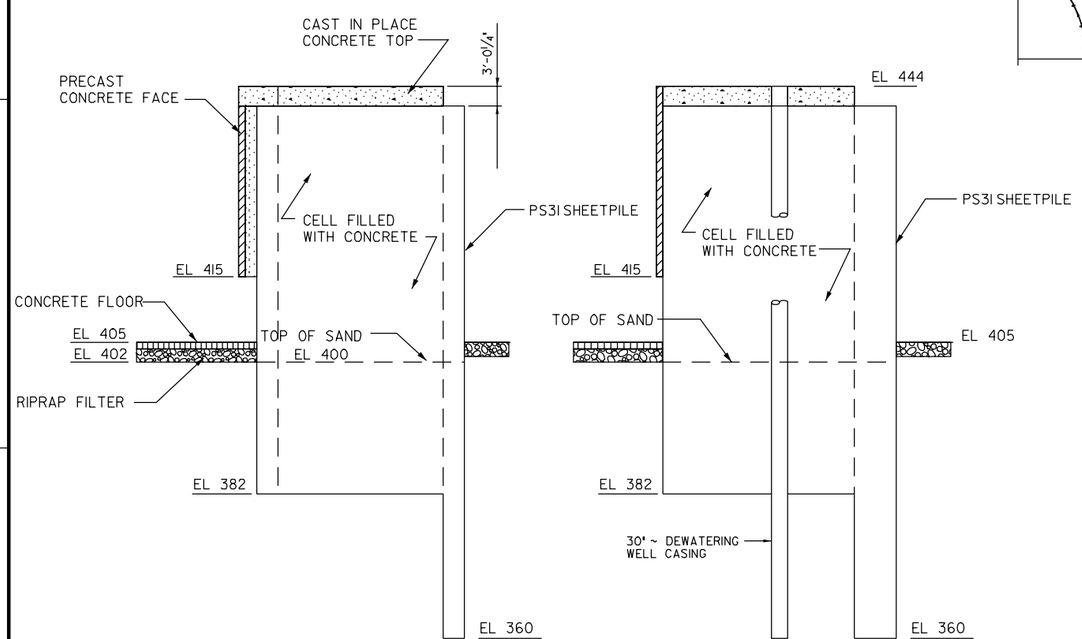

SECTION A-A

SECTION B-B

INTERMEDIATE WALL EXTENSION

SCALE: 1" = 10'

10' 0 10'

Revisions			
Symbol	Description	Date	Approved

U.S. ARMY ENGINEER DISTRICTS
CORPS OF ENGINEERS

ROCK ISLAND, ILLINOIS
ST. LOUIS, MISSOURI
ST. PAUL, MINNESOTA

US Army Corps of Engineers
Rock Island District
St. Louis District
St. Paul District

UPPER MISSISSIPPI RIVER & ILLINOIS WATERWAY SYSTEM
NAVIGATION FEASIBILITY STUDY
LOCATION 2

SAND FOUNDED
PLAN AND SECTIONS

Scale:
Date:

PLATE P2D3

DESIGN*FILE*SPECIFICATION

17-JUL-2000 15:51
e:\projects\ns00\relook\3 4 ftp\plate3.dgn

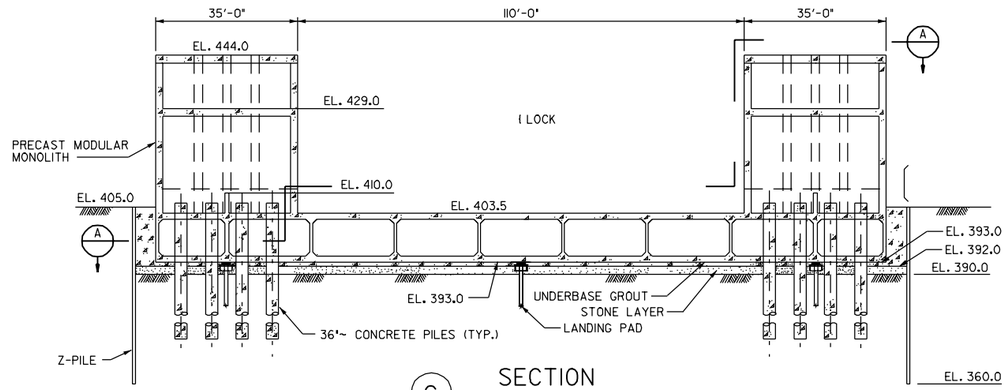

C SECTION

SCALE: 1/16" = 1'-0"

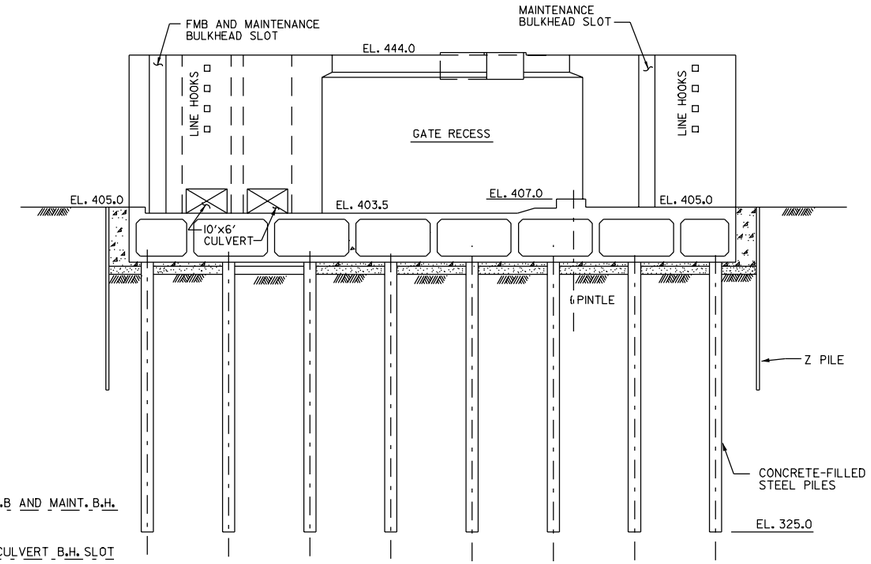

B SECTION

SCALE: 1/16" = 1'-0"

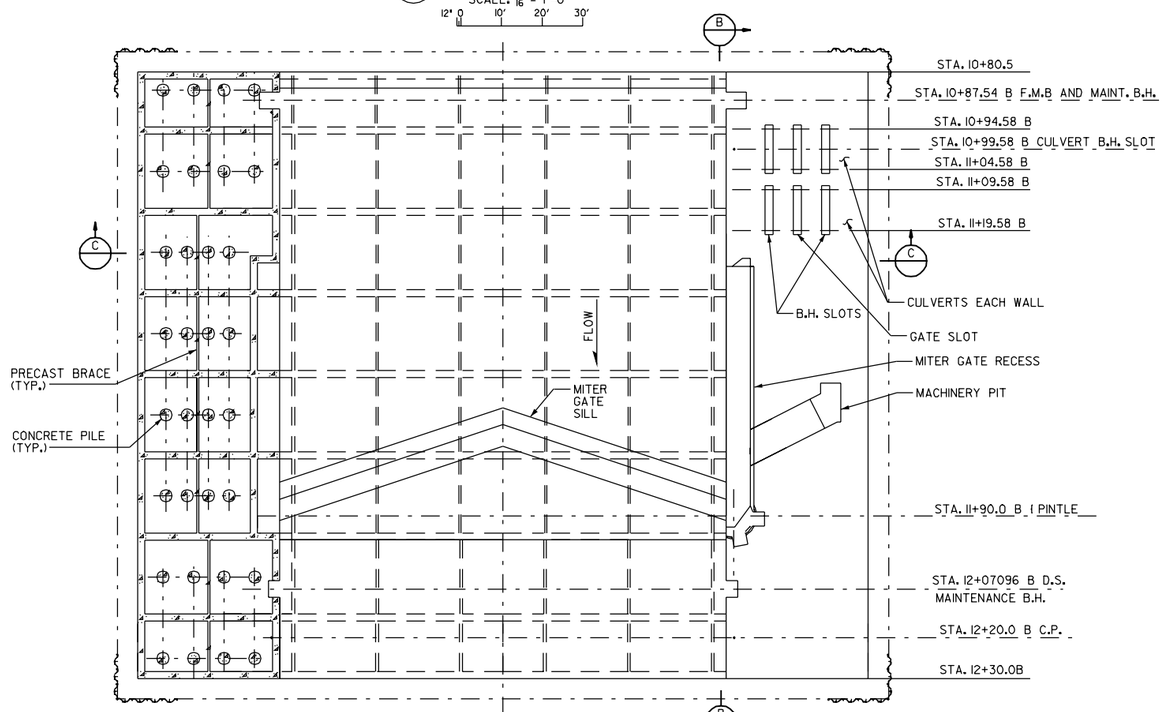

A SECTIONAL PLAN

Revisions			
Symbol	Description	Date	Approved

U.S. ARMY ENGINEER DISTRICTS CORPS OF ENGINEERS

ROCK ISLAND, ILLINOIS
ST. LOUIS, MISSOURI
ST. PAUL, MINNESOTA

US Army Corps of Engineers
Rock Island District
St. Louis District
St. Paul District

UPPER MISSISSIPPI RIVER & ILLINOIS WATERWAY SYSTEM
NAVIGATION FEASIBILITY STUDY
LOCATION 2

SAND FOUNDED
FLOAT-IN GATE MONOLITH

Scale:
Date:

PLATE P2D4

28-SEP-1999 08:50
e:\projects\ns00\relook\3 4 ftp\12x4.dgn

28-SEP-1999 08:50
e:\projects\ns00\relook\3 4 ftp\12x4.dgn

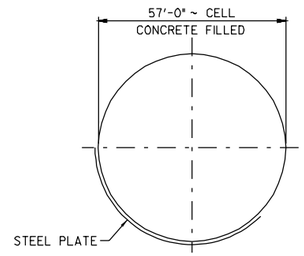

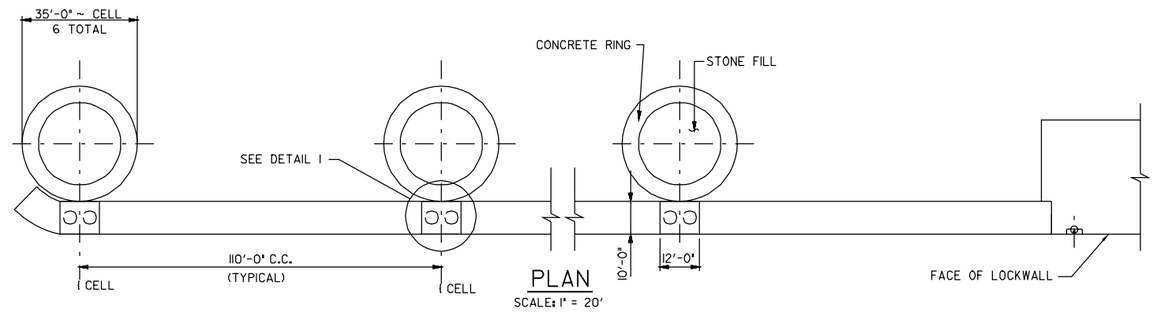

PLAN

SCALE: 1" = 20'

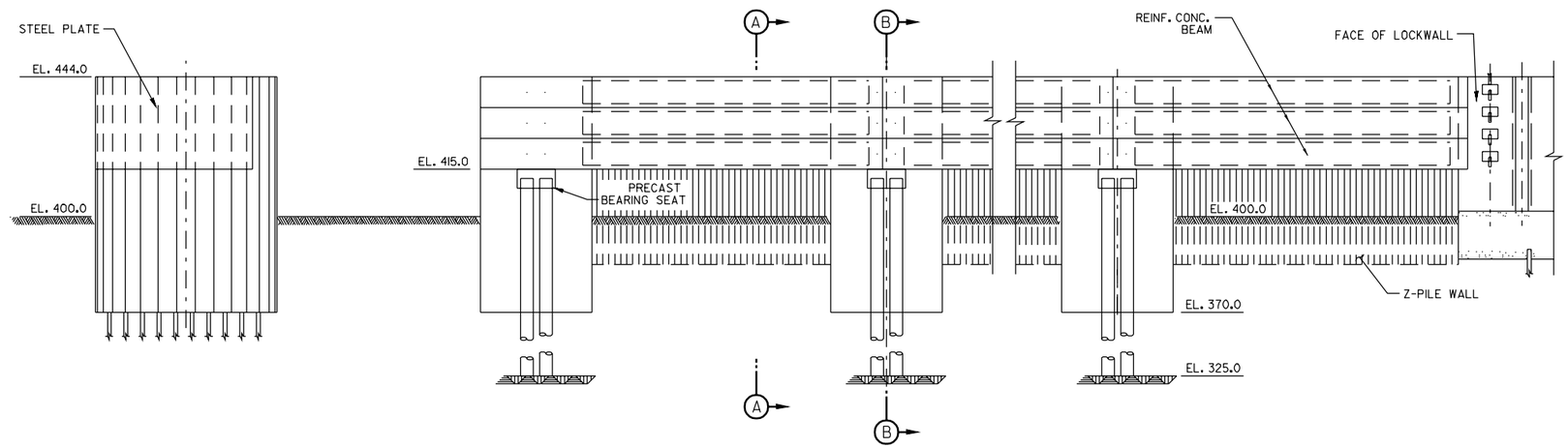

ELEVATION OF DOWNSTREAM GUIDEWALL

SCALE: 1" = 20'

20' 0 20'

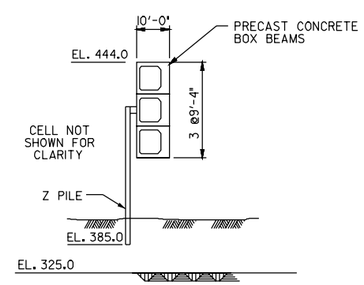

SECTION A-A

BEAMS, BEARING SEAT AND PILES

SCALE: 1" = 20'

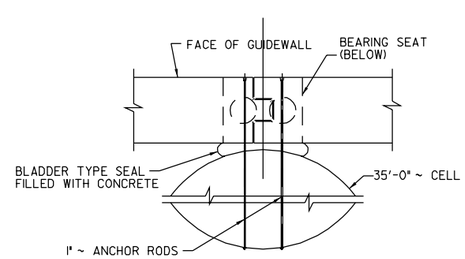

DETAIL 1

SCALE: 1" = 10'

10' 0 10'

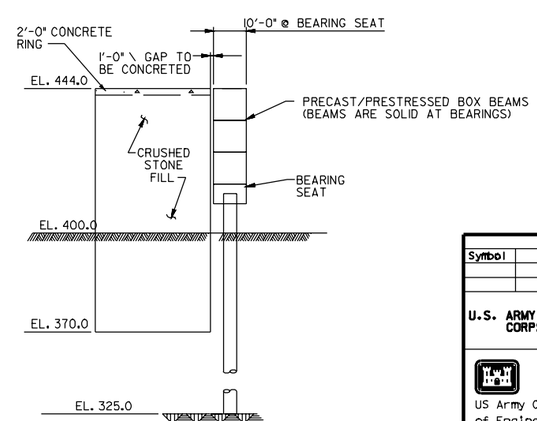

SECTION B-B

SCALE: 1" = 20'

Revisions			
Symbol	Description	Date	Approved
	$$$DESIGN$FILE$SPECIFICATION$$$		

U.S. ARMY ENGINEER DISTRICTS
CORPS OF ENGINEERS

ROCK ISLAND, ILLINOIS
ST. LOUIS, MISSOURI
ST. PAUL, MINNESOTA

US Army Corps of Engineers
Rock Island District
St. Louis District
St. Paul District

UPPER MISSISSIPPI RIVER & ILLINOIS WATERWAY SYSTEM
NAVIGATION FEASIBILITY STUDY
LOCATION 2

DOWNSTREAM GUIDEWALL
PLAN, ELEV. AND SECT.

Scale: 20:1

Date:

PLATE P2D5

28-SEP-1999 07:27
e:*projects*ns00*relook*3 4 ftp*usdsgw.dgn

$$$DATE-TIME$$$$

28-SEP-1999 07:27
e:*projects*ns00*relook*3 4 ftp*usdsgw.dgn

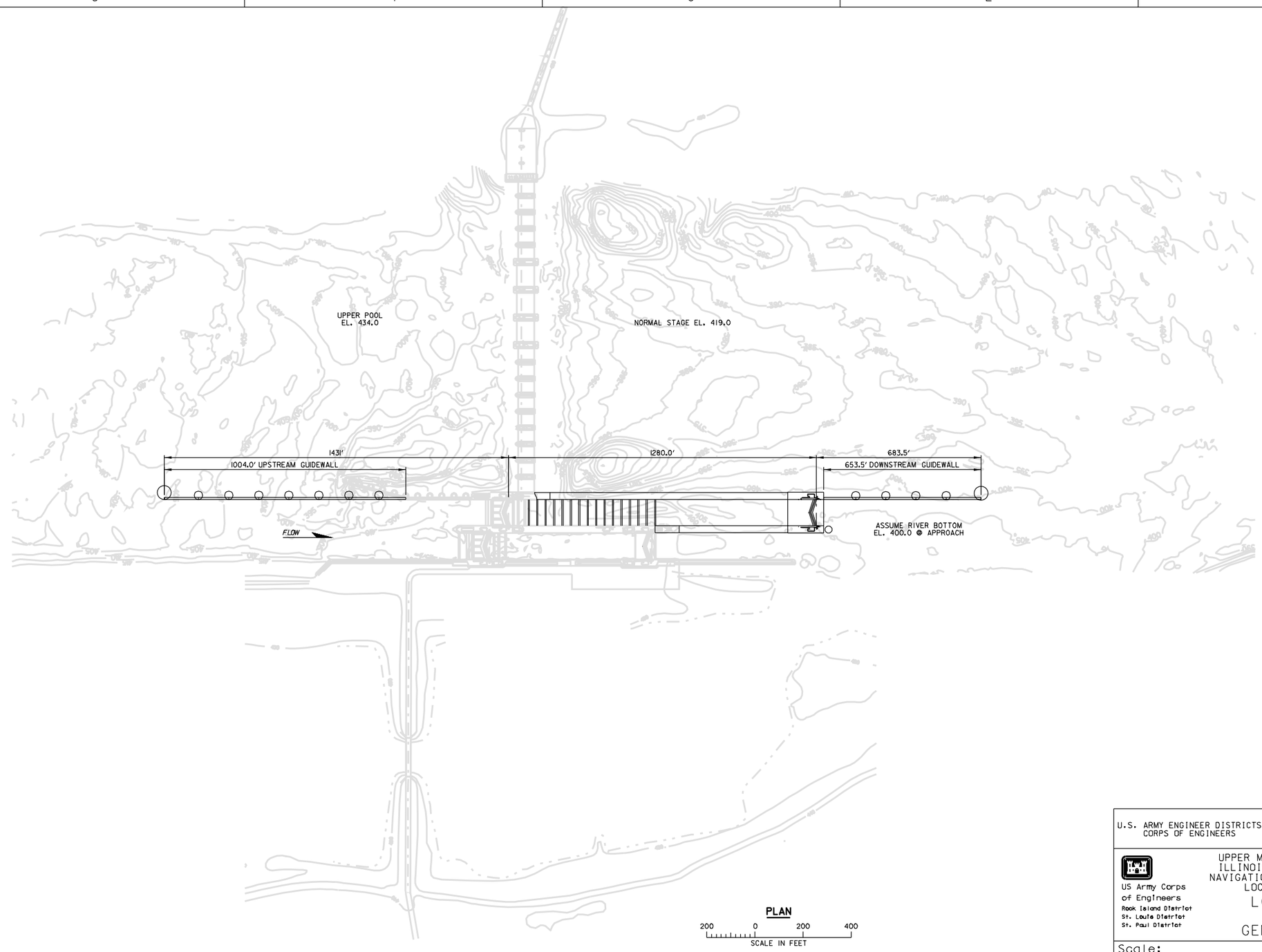

U.S. ARMY ENGINEER DISTRICTS CORPS OF ENGINEERS	ROCK ISLAND, ILLINOIS ST. LOUIS, MISSOURI ST. PAUL, MINNESOTA
US Army Corps of Engineers Rock Island District St. Louis District St. Paul District	UPPER MISSISSIPPI RIVER & ILLINOIS WATERWAY SYSTEM NAVIGATION FEASIBILITY STUDY LOCK & DAM NO. 25 LOCATION 3 GENERAL PLAN
Scale:	
Date: August 1, 1995	PLATE 3R-P-1

LOC3_GP.DGN

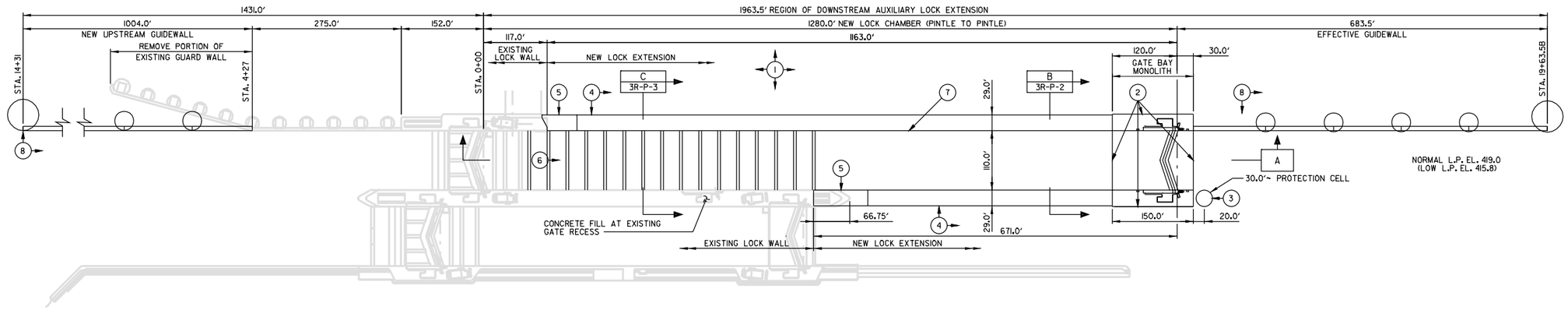

PLAN

DOWNSTREAM END OF AUXILIARY LOCK EXTENSION

100 0 100 200

SCALE IN FEET

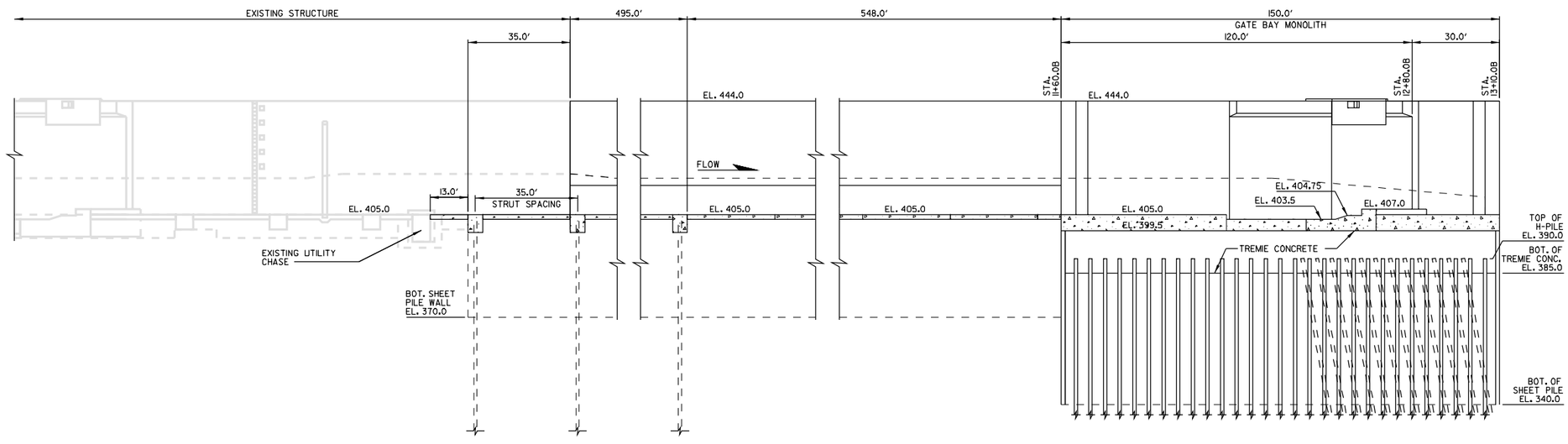

CONSTRUCTION SEQUENCE

1. EXCAVATE SITE AND FILL SCOUR HOLE.
2. INSTALL SHEET PILE COFFER DAMS FOR WALLS AND MITER GATE MONOLITHS, AND DRIVE PILES.
3. CONSTRUCT MITER GATE MONOLITHS WITHIN BRACED SHEET PILE COFFERDAM AND 30' DIA. PROTECTION CELL.
4. CONSTRUCT CHAMBER AND CULVERT DISCHARGE WALLS WITHIN SHEET PILE COFFERDAM TO 423.5. CONVENTIONAL CONSTRUCTION ABOVE EL. 423.5.
5. CONSTRUCT TIE-IN FOR LOCK WALLS.
6. INSTALL FLOOR SYSTEM.
7. TIE BEAMS TO LOCK WALLS AND MODIFY EXISTING INTERMEDIATE WALL.
8. CONSTRUCT UPSTREAM AND DOWNSTREAM GUIDEWALLS.

ELEVATION A

WALL & FLOOR SLAB

20 0 20 40

SCALE IN FEET

U.S. ARMY ENGINEER DISTRICTS CORPS OF ENGINEERS	ROCK ISLAND, ILLINOIS ST. LOUIS, MISSOURI ST. PAUL, MINNESOTA
US Army Corps of Engineers Rock Island District St. Louis District St. Paul District	UPPER MISSISSIPPI RIVER & ILLINOIS WATERWAY SYSTEM NAVIGATION FEASIBILITY STUDY LOCK & DAM NO. 25 LOCATION 3 LOCK TYPE R PLAN & SECTIONS
Scale:	PLATE 3R-P-2
Date:	

LOC3R_DS.DGN

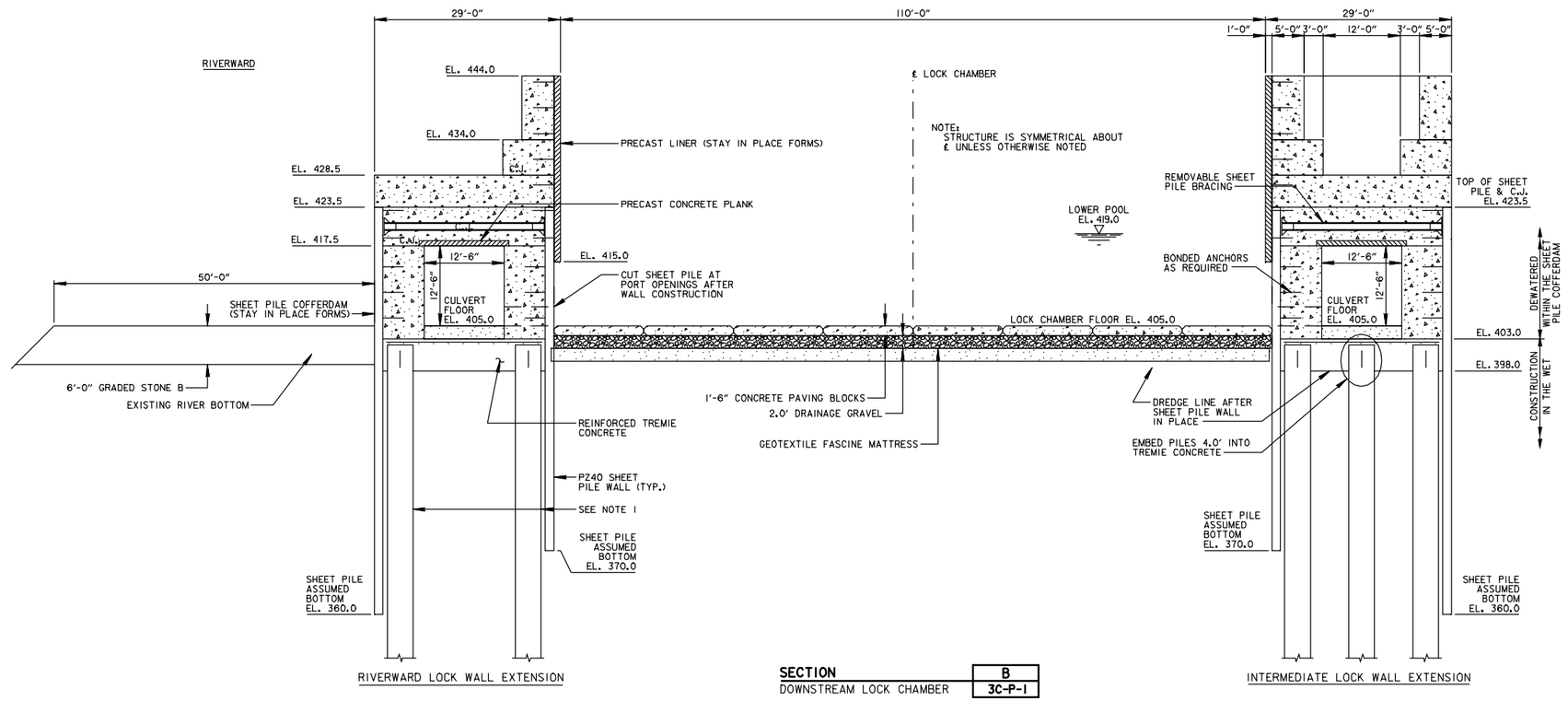

SECTION B
DOWNSTREAM LOCK CHAMBER 3C-P-1

NOTE:

1. BEARING PILE LAYOUT:
   A. RIVERWARD WALL:
      48" DIA. PIPE PILE, 5/8" WALL THICKNESS, A36
      TRANSVERSE ROW SPACING = 11'-0"
      LONGITUDINAL ROW SPACING = 20'-0"
   B. INTERMEDIATE WALL:
      48" DIA. PIPE PILE, 5/8" WALL THICKNESS, A36
      TRANSVERSE ROW SPACING = 11'-0"
      LONGITUDINAL ROW SPACING = 10'-0"
2. LATERAL LOADS ON WALLS RESISTED BY PIPE PILE FOUNDATIONS.

10 0 10 20
SCALE IN FEET

U.S. ARMY ENGINEER DISTRICTS CORPS OF ENGINEERS	ROCK ISLAND, ILLINOIS ST. LOUIS, MISSOURI ST. PAUL, MINNESOTA
US Army Corps of Engineers Rock Island District St. Louis District St. Paul District	UPPER MISSISSIPPI RIVER & ILLINOIS WATERWAY SYSTEM NAVIGATION FEASIBILITY STUDY LOCK & DAM NO. 25 LOCATION 3 LOCK TYPE R SECTION
Scale:	PLATE 3R-P-3
Date:	

LOC3R_S1.DGN

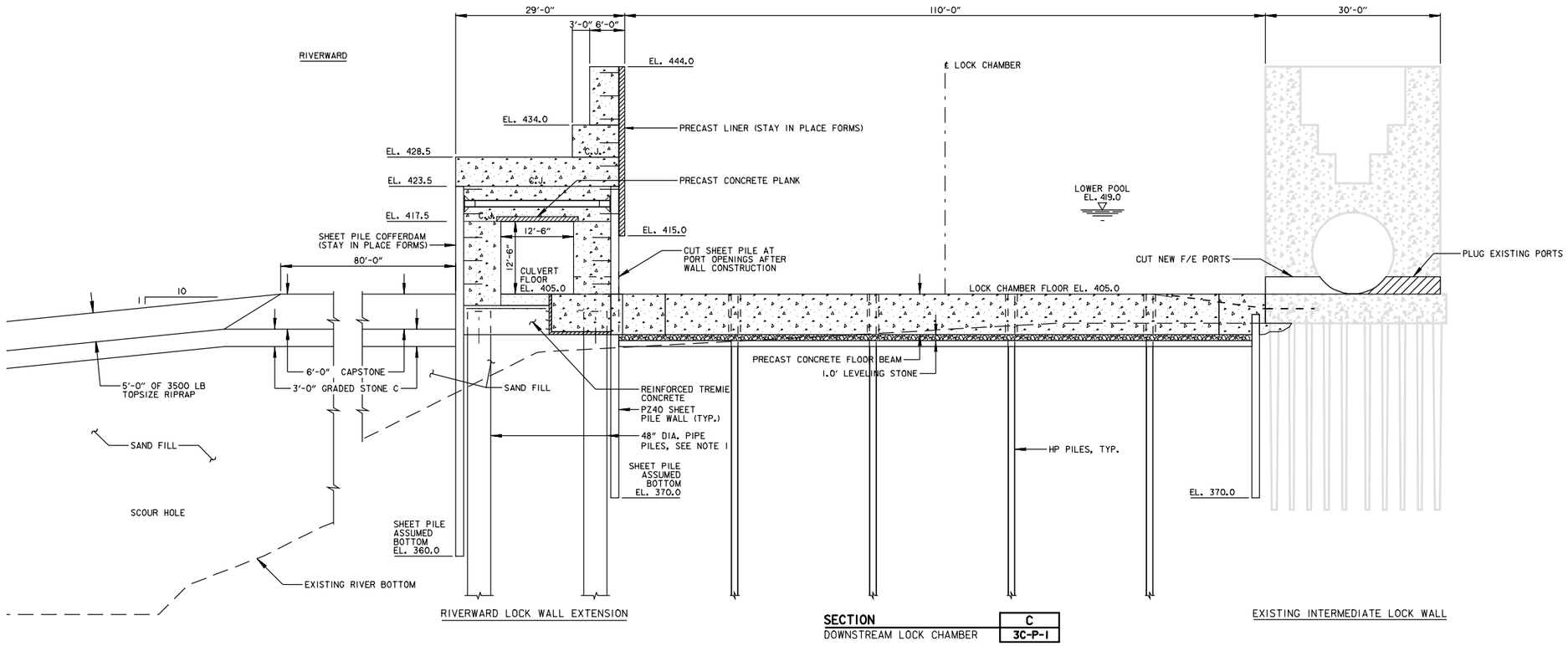

SECTION C
DOWNSTREAM LOCK CHAMBER 3C-P-1

NOTE:

1. BEARING PILE LAYOUT FOR RIVERWARD WALL:

   48" DIA. PIPE PILE, 5/8" WALL THICKNESS, A36
   TRANSVERSE ROW SPACING = 11'-0"
   LONGITUDINAL ROW SPACING = 20'-0"

2. LATERAL LOADS ON WALLS RESISTED BY PIPE PILE FOUNDATIONS.

10 0 10 20
SCALE IN FEET

U.S. ARMY ENGINEER DISTRICTS CORPS OF ENGINEERS	ROCK ISLAND, ILLINOIS ST. LOUIS, MISSOURI ST. PAUL, MINNESOTA
US Army Corps of Engineers Rock Island District St. Louis District St. Paul District	UPPER MISSISSIPPI RIVER & ILLINOIS WATERWAY SYSTEM NAVIGATION FEASIBILITY STUDY LOCK & DAM NO. 25 LOCATION 3 LOCK TYPE R SECTION
Scale: Date:	PLATE 3R-P-4

LOC3R_S2.DGN

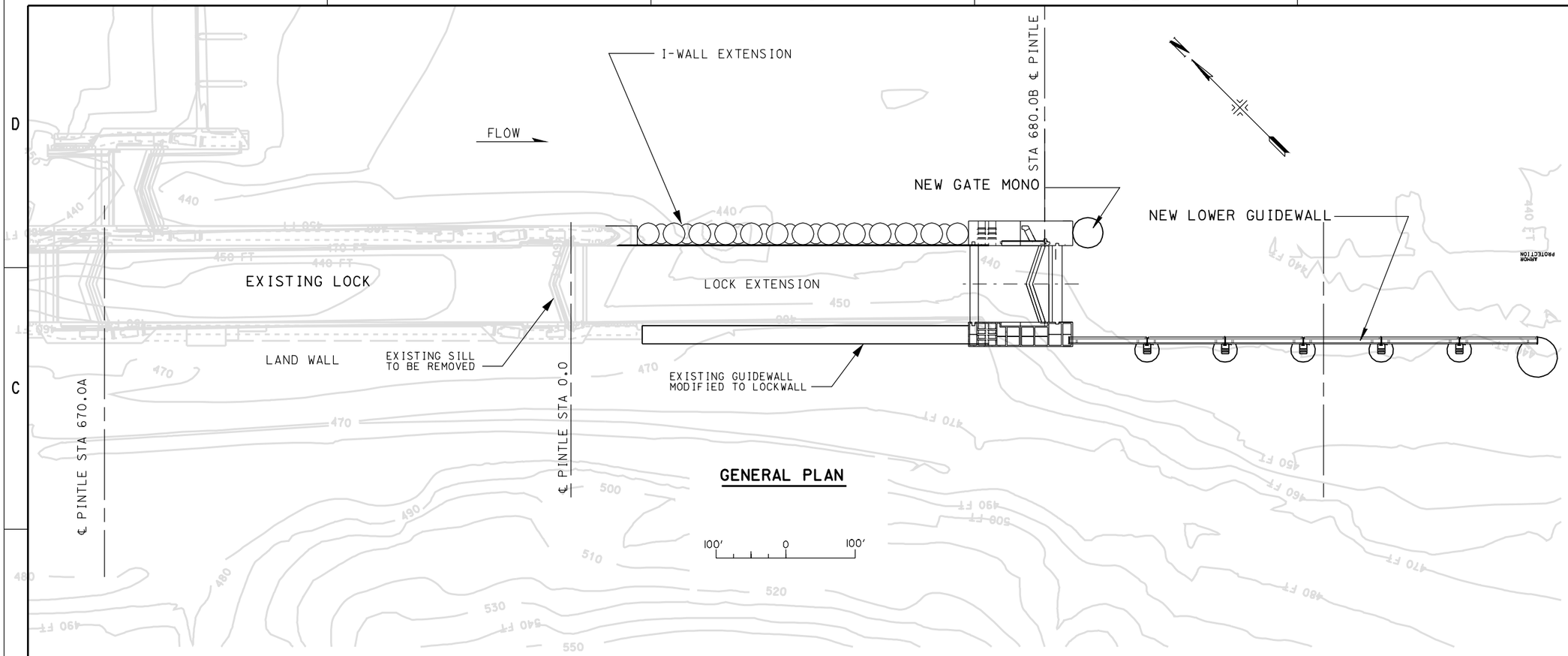

GENERAL PLAN

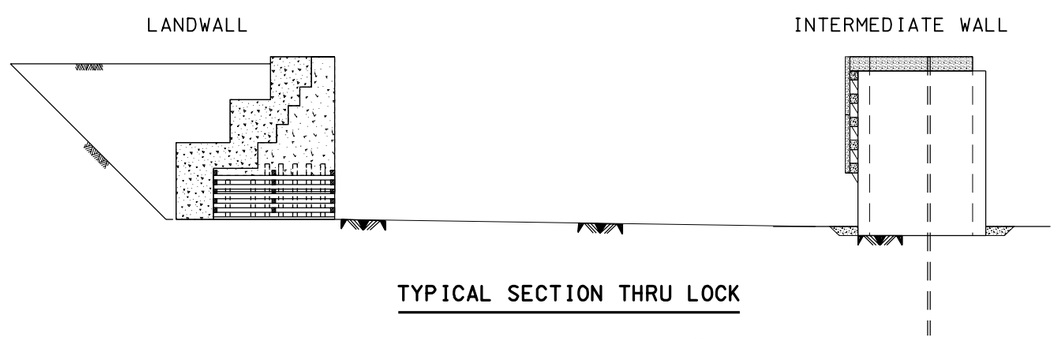

TYPICAL SECTION THRU LOCK

FOR PROPOSAL ONLY

U.S. ARMY ENGINEER DISTRICTS CORPS OF ENGINEERS	ROCK ISLAND, ILLINOIS ST. LOUIS, MISSOURI ST. PAUL, MINNESOTA

US Army Corps of Engineers
Rock Island District
St. Louis District
St. Paul District

UPPER MISSISSIPPI RIVER & ILLINOIS WATERWAY SYSTEM NAVIGATION STUDY

ROCK FOUNDED LOCATION 2 GENERAL PLAN

Scale: As Shown

PLATE R2D1

29-SEP-1999 07:34
e:*projects*ns00*relook*r2d1.dgn

29-SEP-1999 07:34
e:*projects*ns00*relook*r2d1.dgn

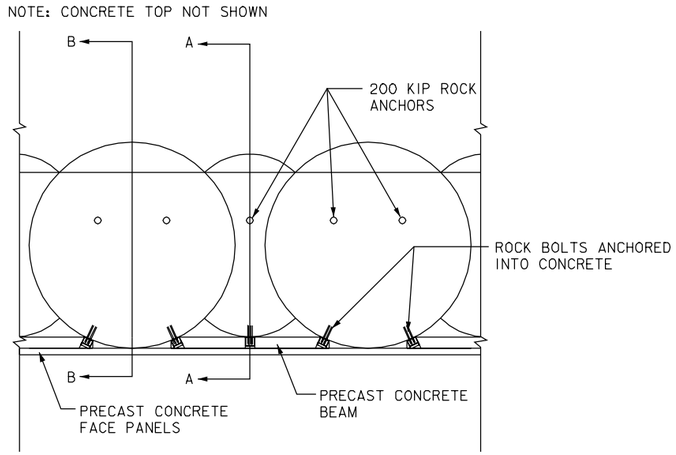

PLAN OF INTERMIDIATE WALL

10' 0 10'

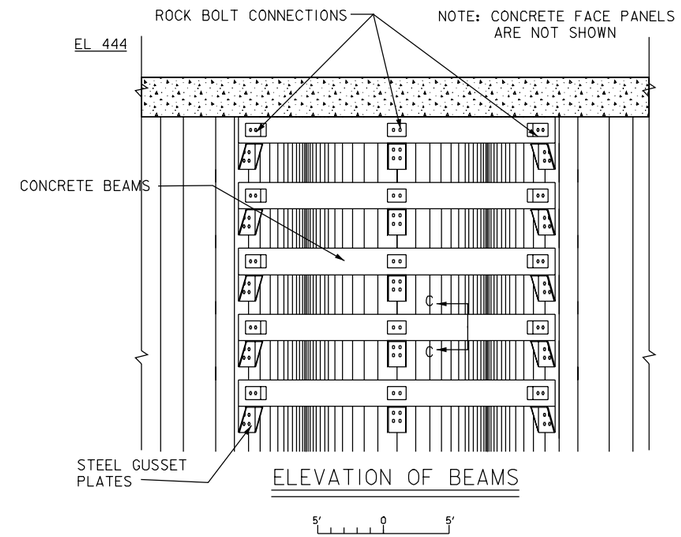

ELEVATION OF BEAMS

5' 0 5'

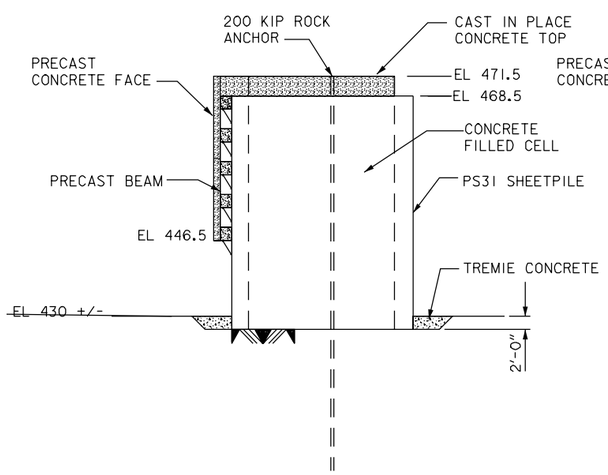

SECTION A-A

THRU ARC

10' 0 10'

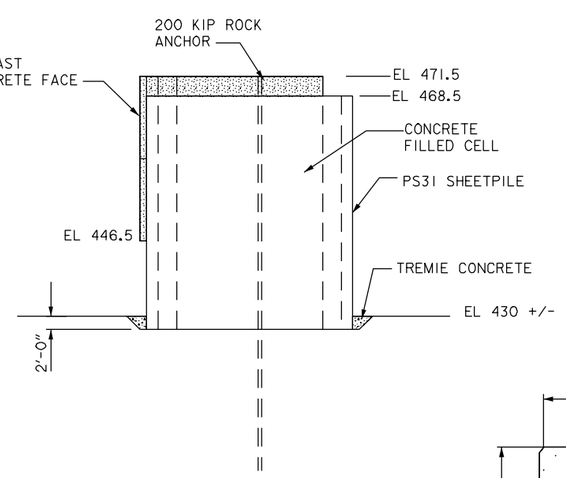

SECTION B-B

THRU CELL

10' 0 10'

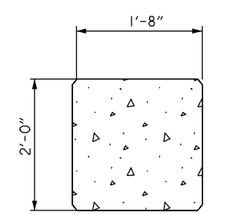

SECTION C-C

NO SCALE

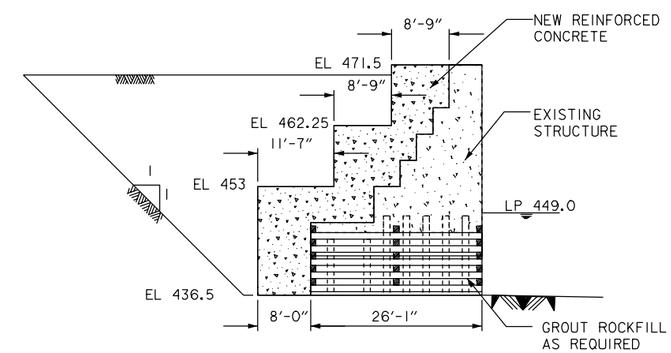

TYPICAL SECTION LANDWALL

10' 0 10'

FOR PROPOSAL ONLY

Revisions			
Symbol	Description	Date	Approved

U.S. ARMY ENGINEER DISTRICTS
CORPS OF ENGINEERS

ROCK ISLAND, ILLINOIS
ST. LOUIS, MISSOURI
ST. PAUL, MINNESOTA

US Army Corps of Engineers
Rock Island District
St. Louis District
St. Paul District

UPPER MISSISSIPPI RIVER & ILLINOIS WATERWAY SYSTEM
NAVIGATION FEASIBILITY STUDY
LOCATION 2

ROCK FOUNDED LOCATION 4 TYPE "D" WALL DETAILS

Scale:
Date:

PLATE R2D2

28-SEP-1999 09:05
e:*projects*ns00*relook*r2d2.dgn

28-SEP-1999 09:05
e:*projects*ns00*relook*r2d2.dgn

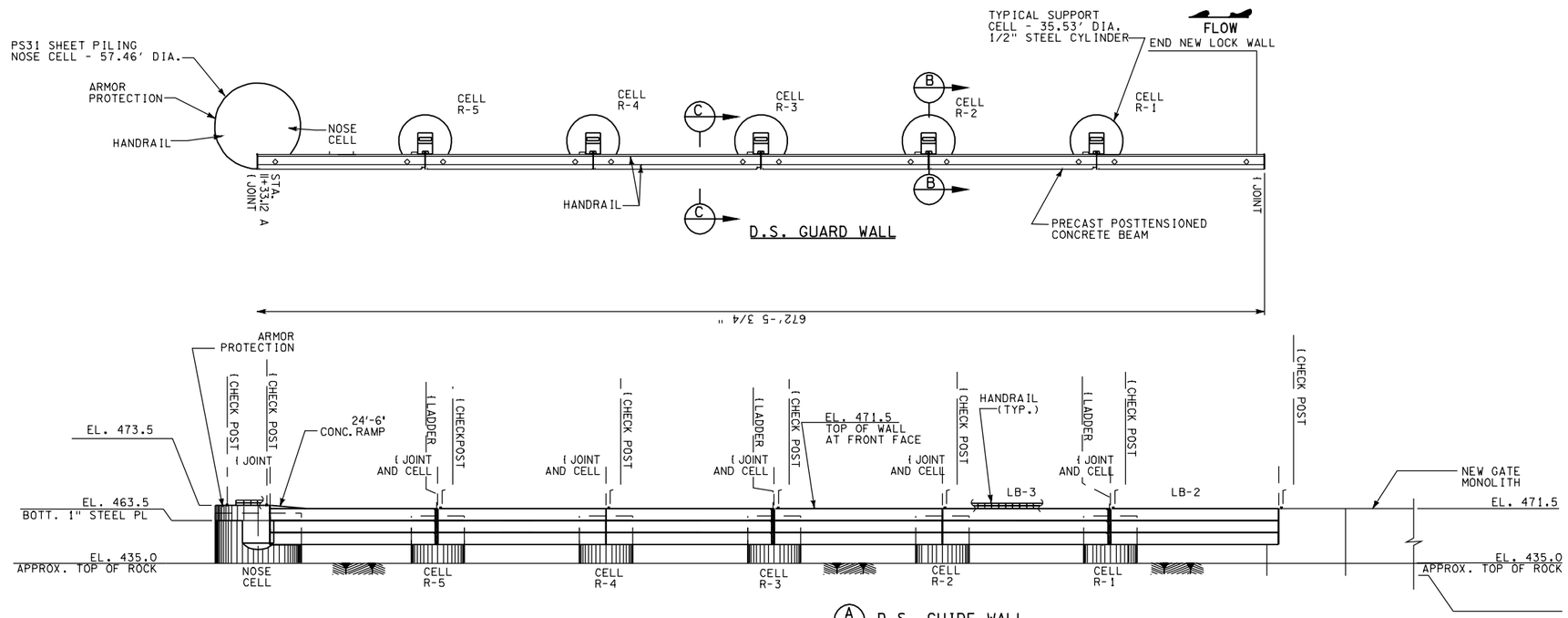

A D.S. GUIDE WALL ELEVATION

40 20 0 40 80FT
SCALE: 1"= 40'

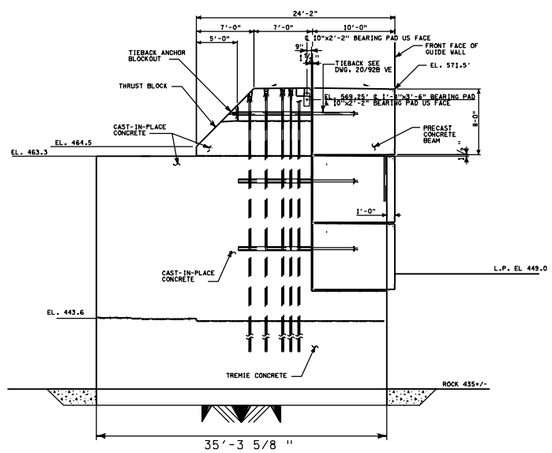

SECTION B
SCALE: 3/16" =1'-0"

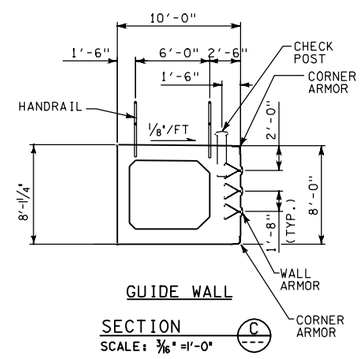

GUIDE WALL
SECTION C
SCALE: 3/16" =1'-0"

FOR PROPOSAL ONLY

Revisions			
Symbol	Description	Date	Approved

U.S. ARMY ENGINEER DISTRICTS
CORPS OF ENGINEERS

ROCK ISLAND, ILLINOIS
ST. LOUIS, MISSOURI
ST. PAUL, MINNESOTA

US Army Corps of Engineers
Rock Island District
St. Louis District
St. Paul District

UPPER MISSISSIPPI RIVER & ILLINOIS WATERWAY SYSTEM NAVIGATION FEASIBILITY STUDY
LOCATION 2

ROCK FOUNDED
LOCATION 2 TYPE D
D/S GUIDEWALL DETAILS

Scale:
Date:

PLATE R2D3

28-SEP-1999 09:11
e:\projects\ns00\relock\r2d3.dgn

28-SEP-1999 09:11
e:\projects\ns00\relock\r2d3.dgn

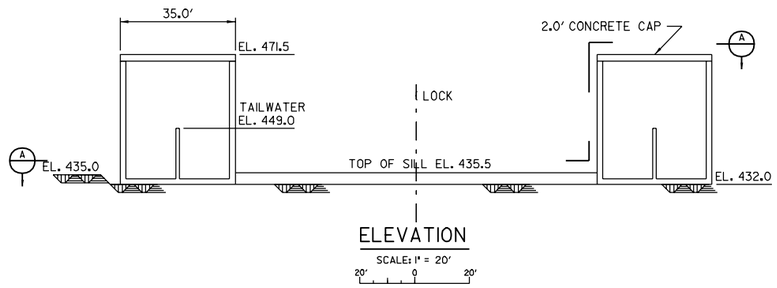

ELEVATION

SCALE: 1" = 20'

20' 0 20'

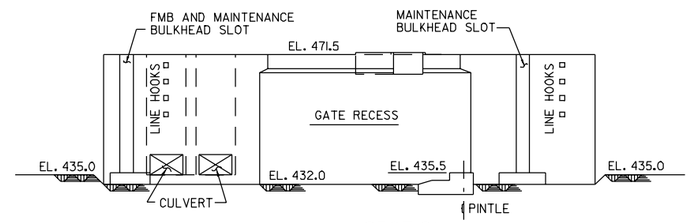

B SECTION

SCALE: 1" = 20' X

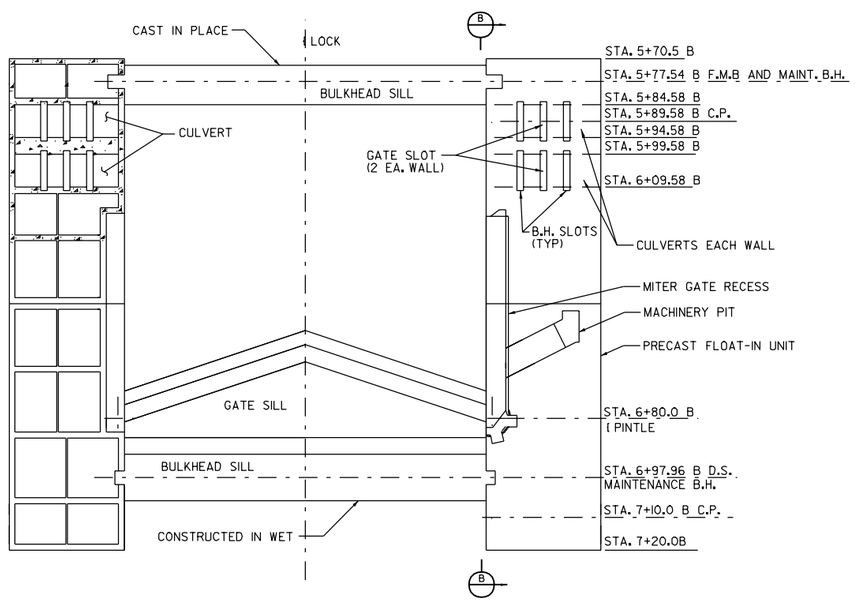

A SECTION

SCALE: 1" = 20' X

FOR PROPOSAL ONLY

Revisions			
Symbol	Description	Date	Approved

U.S. ARMY ENGINEER DISTRICTS
CORPS OF ENGINEERS

ROCK ISLAND, ILLINOIS
ST. LOUIS, MISSOURI
ST. PAUL, MINNESOTA

US Army Corps of Engineers
Rock Island District
St. Louis District
St. Paul District

UPPER MISSISSIPPI RIVER &
ILLINOIS WATERWAY SYSTEM
NAVIGATION FEASIBILITY STUDY
LOCATION 2

LOCATION 2 TYPE C REFINED
ROCK FOUNDED
GATE MONOLITHS

Scale:

Date:

PLATE R2D4

28-SEP-1999 09:12
e:\projects\ns00\relock\r2d4.dgn

28-SEP-1999 09:12
e:\projects\ns00\relock\r2d4.dgn

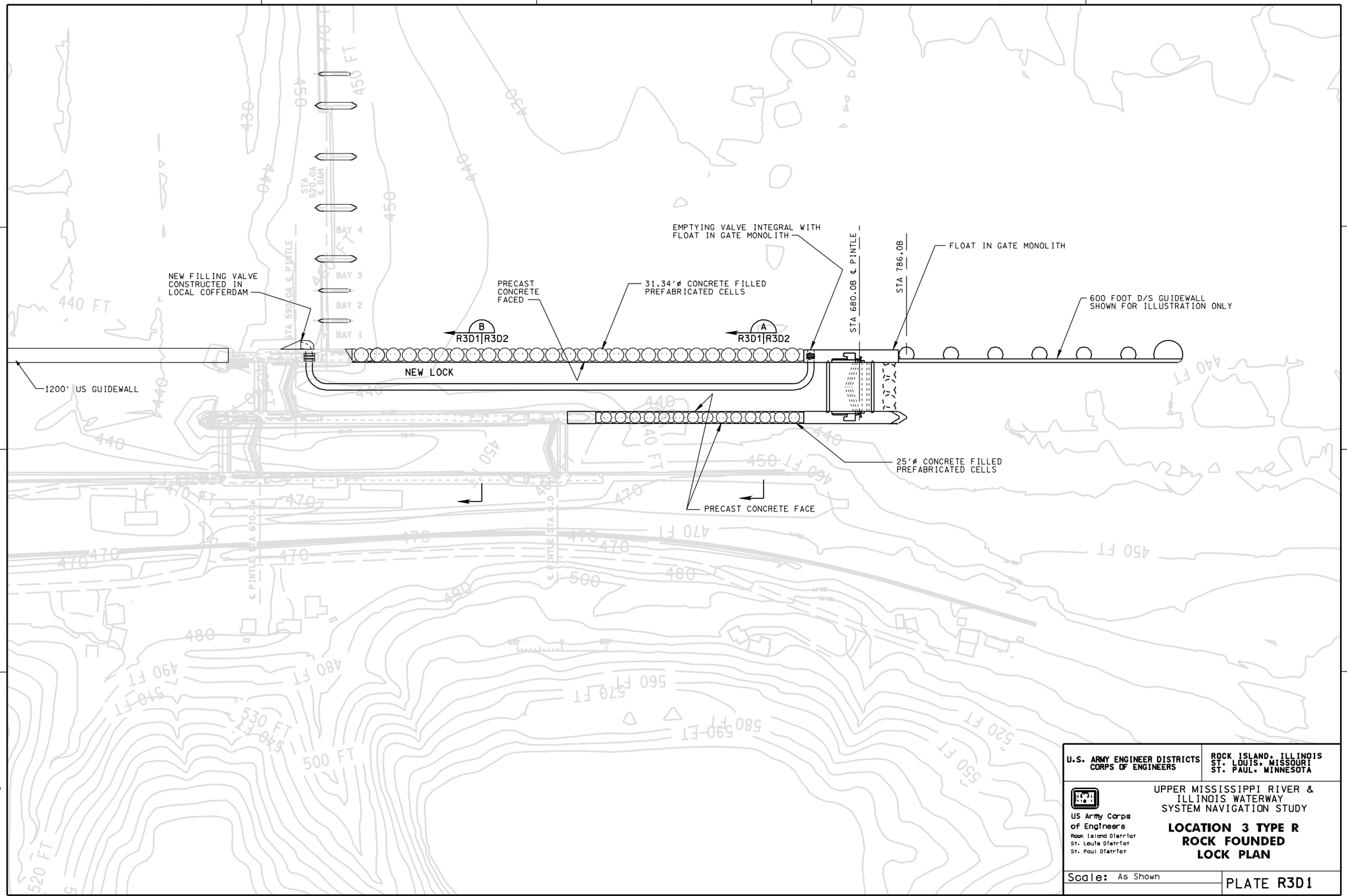

U.S. ARMY ENGINEER DISTRICTS CORPS OF ENGINEERS	ROCK ISLAND, ILLINOIS ST. LOUIS, MISSOURI ST. PAUL, MINNESOTA
US Army Corps of Engineers Rock Island District St. Louis District St. Paul District	UPPER MISSISSIPPI RIVER & ILLINOIS WATERWAY SYSTEM NAVIGATION STUDY **LOCATION 3 TYPE R ROCK FOUNDED LOCK PLAN**
Scale: As Shown	PLATE R3D1

28-SEP-1999 10:54
e:*projects*ns00*location 3 relock*r3d1.dgn

28-SEP-1999 10:54
e:*projects*ns00*location 3 relock*r3d1.dgn

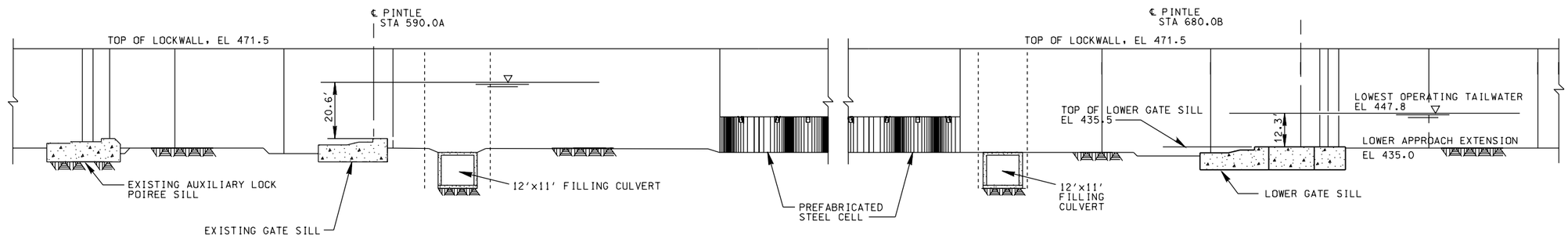

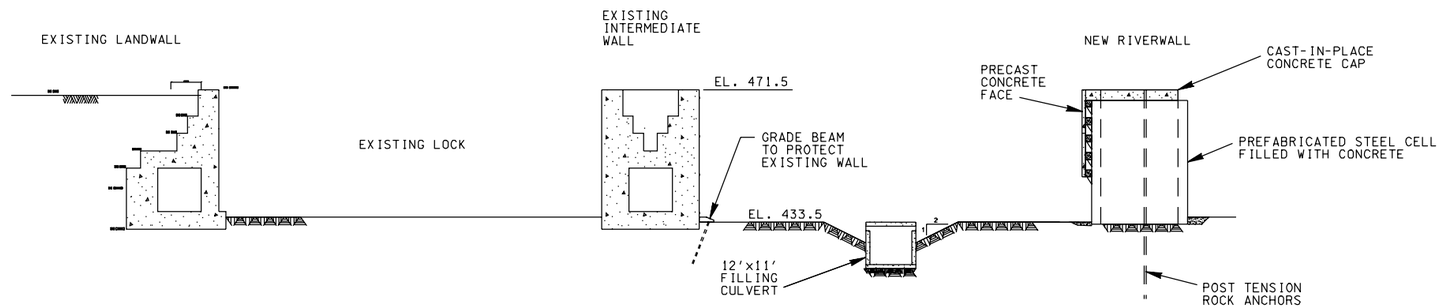

(B) SECTION THRU EXISTING LOCK

20' 0 20'

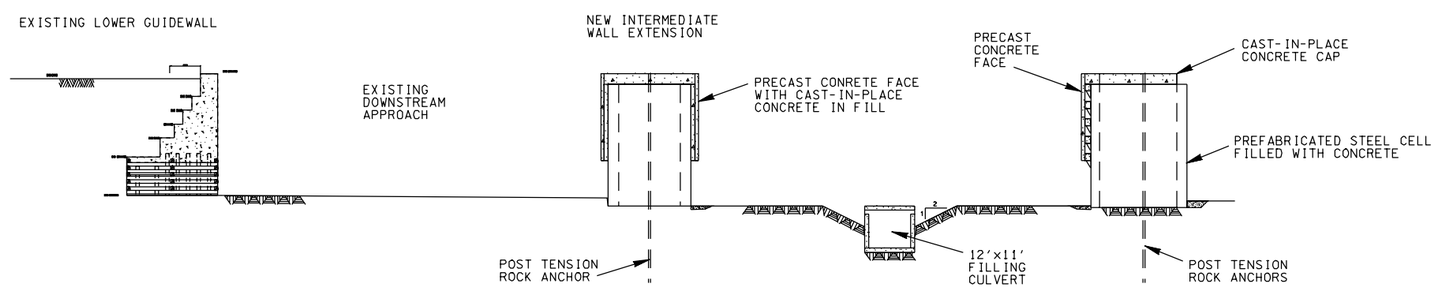

(A) SECTION THRU NEW WALL

20' 0 20'

U.S. ARMY ENGINEER DISTRICTS CORPS OF ENGINEERS	ROCK ISLAND, ILLINOIS ST. LOUIS, MISSOURI ST. PAUL, MINNESOTA
US Army Corps of Engineers Rock Island District St. Louis District St. Paul District	UPPER MISSISSIPPI RIVER & ILLINOIS WATERWAY SYSTEM NAVIGATION STUDY **LOCATION 3** **TYPE R** **SECTIONS ELEVATIONS**
Scale: As Shown	PLATE R3D2

28-SEP-1999 10:58
e:*projects*ns00*location 3 relook*r3d2.dgn

28-SEP-1999 10:58
e:*projects*ns00*location 3 relook*r3d2.dgn

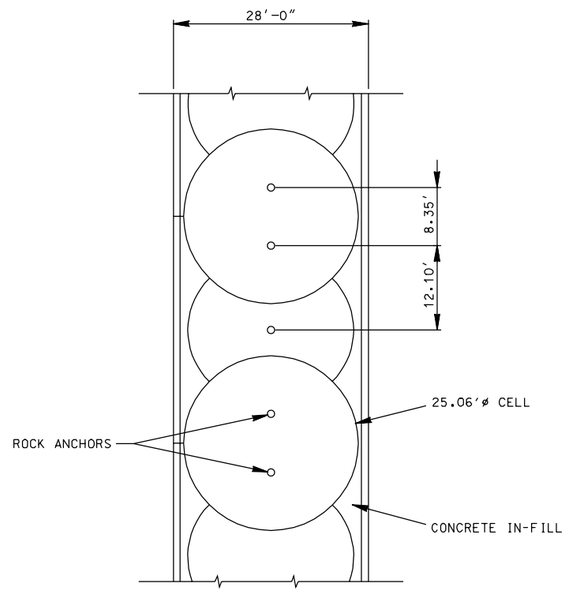

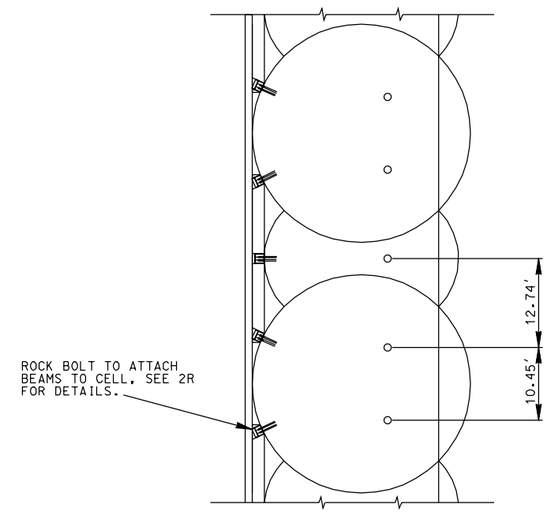

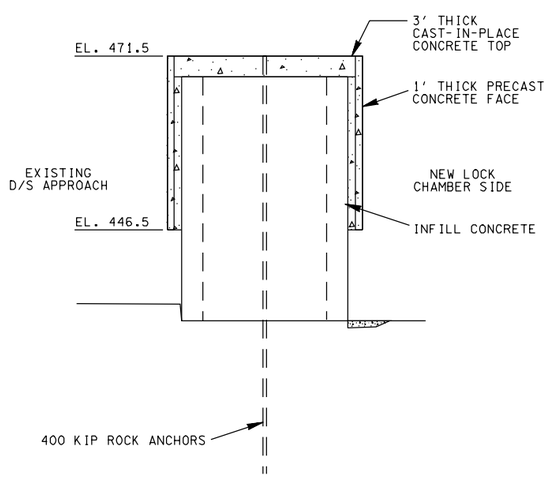

I-WALL PLAN & SECTION

SCALE: IN FEET

10' 0 10'

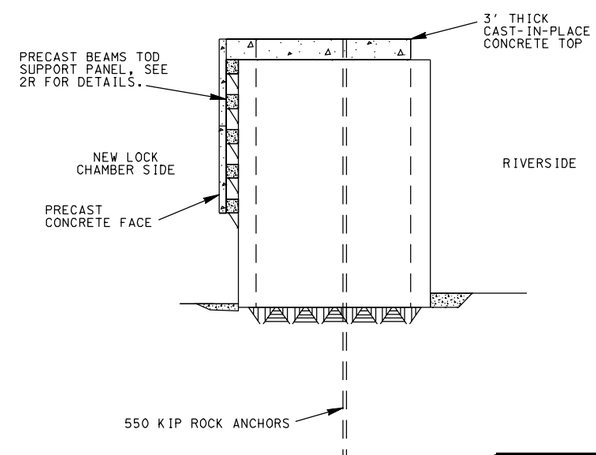

RIVER WALL PLAN & SECTION

NOTE: SECTIONS ARE THROUGH ARCS

SCALE: IN FEET

10' 0 10'

U.S. ARMY ENGINEER DISTRICTS CORPS OF ENGINEERS	ROCK ISLAND, ILLINOIS ST. LOUIS, MISSOURI ST. PAUL, MINNESOTA
US Army Corps of Engineers Rock Island District St. Louis District St. Paul District	UPPER MISSISSIPPI RIVER & ILLINOIS WATERWAY SYSTEM NAVIGATION STUDY **LOCATION 3 TYPE R DETAILED SECTIONS**
Scale: As Shown	PLATE R3D3

28-SEP-1999 10:59
e:*projects*ns00*location 3 relook*r3d3.dgn

28-SEP-1999 10:59
e:*projects*ns00*location 3 relook*r3d3.dgn

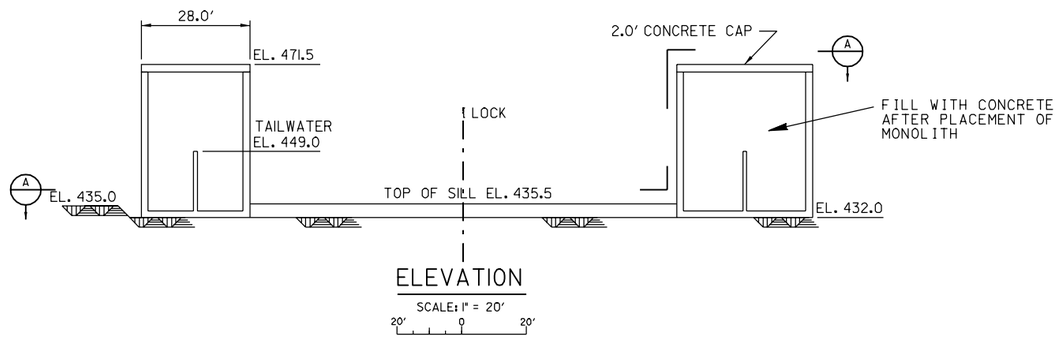

ELEVATION

SCALE: 1" = 20'

20' 0 20'

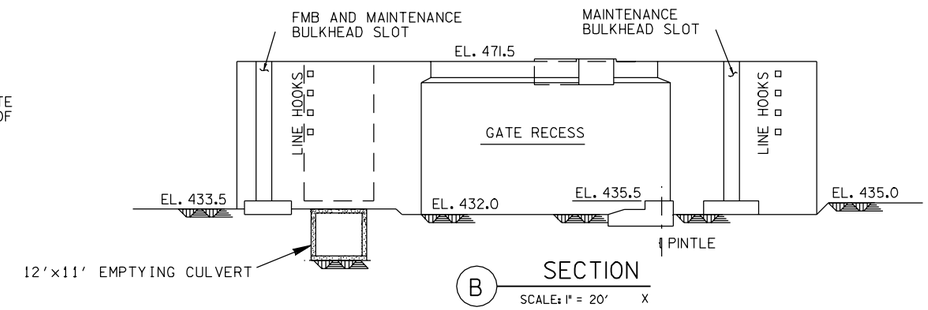

B SECTION

SCALE: 1" = 20' X

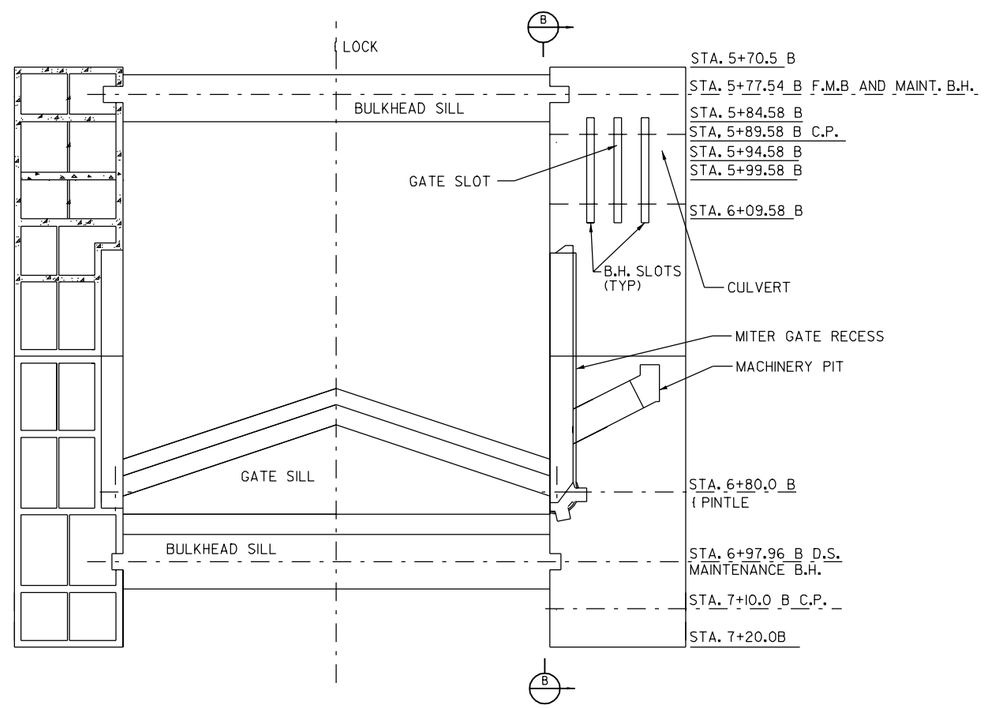

A SECTION

SCALE: 1" = 20' X

FOR PROPOSAL ONLY

U.S. ARMY ENGINEER DISTRICTS CORPS OF ENGINEERS	ROCK ISLAND, ILLINOIS ST. LOUIS, MISSOURI ST. PAUL, MINNESOTA
US Army Corps of Engineers Rock Island District St. Louis District St. Paul District	UPPER MISSISSIPPI RIVER & ILLINOIS WATERWAY SYSTEM NAVIGATION STUDY **LOCATION 3** **TYPE R FLOAT IN MITER GATE BLOCKS**
Scale: As Shown	PLATE R3D4

28-SEP-1999 10:59
e:\projects\ns00\location 3 relook\r3d4.dgn

28-SEP-1999 10:59
e:\projects\ns00\location 3 relook\r3d4.dgn

Attachment B: Cost Estimates

LOCK AND DAM NO. 25, LOCATION 2, TYPE R
1200' LOCK ALTERNATIVE (SAND-FOUNDED)

ACCOUNT CODE	ITEM	QUANTITY	UNIT	UNIT PRICE ($'s)	AMOUNT ($1,000's)
01.	**LANDS AND DAMAGES**				
	REAL ESTATE	1	JOB	SUM	150
04.	**DAMS**				
	04 DAMS SUBTOTAL				0
05.	**LOCKS**				
	SITEWORK				
	MOBILIZATION	1	JOB	SUM	8,650
	DEMOLITION	1	JOB	SUM	500
	EXCAVATION	16,600	CY	4.5	75
	SCOUR PROTECTION	15,625	TN	20	313
	FOUNDATION/LOCK DEWATERING	1	JOB	SUM	3,000
	MARINE FACILITIES, TEMP MOORING STRUCTURE	1	JOB	SUM	950
	CONCRETE				
	UNDERBASE GROUTING	2,200	CY	200	440
	CAST IN PLACE REINFORCED CONCRETE	12,568	CY	280	3,519
	LIGHTWEIGHT CONCRETE	6,030	CY	325	1,960
	PRECAST CONCRETE	7,015	CY	400	2,806
	TREMIE CONCRETE	9,178	CY	165	1,514
	STONE FILL FOR IWALL CELLS	47,535	TN	20	951
	GROUT FOR STONE FILLED CELLS	5,212	CY	200	1,042
	SAND FILL FOR LANDWALL CELLS	23,300	CY	10.00	233
	FURNISH AND SET LANDING PADS	6	EA	19000	114
	FLOAT IN AND SET MITER GATE SILL	1	JOB	SUM	140
	36" DIA PIPE PILES, QTY 56 PILES	4,200	LF	350	1,470
	SET PRECAST WALL PANELS	48	EA	8000	384
	SET PRECAST BEAMS	50	EA	3000	150
	ARTICULATED CONCRETE MAT FOR FLOOR	70,000	SF	10	700
	BEDDING UNDER FLOOR MAT	7,000	TN	20	140
	METALS				
	RIVER WALL SHEET PILING (PS-31)	114,282	SF	22.04	2,519
	STAY IN PLACE TEMPLATES	14	EA	50,000	700
	LANDWALL SHEET PILING (PS-31)	137,295	SF	19.64	2,696
	Z-PILE CRADLE FOR FOAT-IN MONOLITH	29,700	SF	21.74	646
	FOUNDATION PILING AND TESTING	1	JOB	SUM	1,000
	H-PILING HP 12X53	5,472	VLF	33.50	183
	STRUCTURAL STEEL (GATES, VALVES, TRASHRACKS)	1	JOB	SUM	11,613
	STRUCTURAL STEEL (MISCELLANEOUS - LADDERS, ETC.)	1	JOB	SUM	3,040
	ROCK BOLTS & SUPPORTS FOR PRECAST BEAMS	140	EA	350	49
	FASTNERS FOR PRECAST PANELS	336	EA	100	34
	ELECTRICAL				
	ELECTRICAL SYSTEM	1	JOB	SUM	4,700
	INSTRUMENTATION	1	JOB	SUM	1,250
	MECHANICAL				
	GATE AND VALVE OPERATING MACHINERY	1	JOB	SUM	2,750
	MECHANICAL SYSTEMS	1	JOB	SUM	3,200
	MISCELLANEOUS	1	JOB	SUM	1,950
	05 LOCKS SUBTOTAL				65,380
05.60.	**GUIDEWALLS**				
	SITEWORK				
	EXCAVATION	118490	CY	4.50	533
	BACKFILL	73640	CY	10	736
	SCOUR PROTECTION	18900	TN	20	378
	CONCRETE				
	48" DIAMETER PILES	1068	VLF	370	395
	CAST IN PLACE CONCRETE	195	CY	180	35
	PRESTRESSED BOX BEAMS	1	JOB	SUM	5,067
	PRECAST BEAM SEATS	6	EA	22,500	135
	TREMIE CONCRETE	90	CY	165	15
	PERMANENT CELL FILL(CONCRETE)	3,302	CY	200	660
	GROUT AND BLADDERS	5,328	CF	29.40	157
	STEEL REINFORCEMENT	155,000	LB	1	155
	STONE FILL FOR WALL CELLS	8,975	CY	20	180
	METALS				
	STEEL SHEET PILING FOR CELLS (PS-31)	62,040	SF	22.04	1,367
	STEEL SHEET PILING FOR SKIRT	29,160	SF	18.35	535
	STEEL H-PILING (FOR 57 FT DIA CELL)	4,080	VLF	52.50	214
	ANCHOR BARS FOR BEAMS	2,160	LF	87.60	189
	WALL ARMOR (14 STRIPS)	369,600	LB	4.20	1,552
	STEEL RUB PLATE AND ACCESSORIES	63,600	LB	6.00	382
	LADDERS AND MISC METALS	100,000	LB	3.00	300
	HANDRAILLING (ALUM.)	1,400	LF	125.40	176
	CHECKPOST	30	EA	1,546	46
	ACCESS HATCHES	1	JOB	SUM	33
	ELECTRICAL				
	ELECTRICAL SYSTEM	1	JOB	SUM	78
	05.60 GUIDEWALLS SUBTOTAL				13,319
09.	**CHANNEL WORK**	1	JOB	SUM	680
	PROJECT SUBTOTAL				79,529
	CONTINGENCIES 25%				19,882
	PROJECT SUBTOTAL WITH CONTINGENCIES				99,412
30.	**PLANNING, ENGINEERING, AND DESIGN (10%)**				9,941
31.	**CONSTRUCTION MANAGEMENT (10%)**				9,941
	PROJECT TOTAL				$ 119,294

TOTAL BASIC LOCK COST (O4., 05., 05.60.) WITH CONTINGENCIES, PED, & CM* **$ 119,000**

*(EXCLUDES REAL ESTATE, RELOCATION, AND CHANNEL WORK WHICH ARE MORE SITE-SPECIFIC.)

LOCK AND DAM NO. 25, LOCATION 3, TYPE CR
1200' LOCK ALTERNATIVE (PILE FOUNDED)

CCOUNT CODE	ITEM	L/D 25	QUANTITY	UNIT	NIT PRICE ($'s)	AMOUNT ($1,000's)
01.	LANDS AND DAMAGES					
		REAL ESTATE	1	JOB	SUM	150
04.	DAMS					
		REMOVAL OF EXISTING STRUCTURES	1	JOB	SUM	150
	04 DAMS SUBTOTAL					150
05.	LOCKS					
		SITEWORK				
		MOBILIZATION	1	JOB	SUM	10,650
		DEMOLITION	1	JOB	SUM	1,790
		EXCAVATION	48,960	CY	6.25	306
		FOUNDATION FILL AT SCOUR HOLE	125,000	CY	18.75	2,344
		WALL FILL	15,760	CY	10.00	158
		CAPSTONE	52,660	TN	25.00	1,317
		RIPRAP	33,380	TN	20.00	668
		LEVELING STONE IN LOCK FLOOR	4,580	TN	15.00	69
		GRAVEL FILTER IN LOCK FLOOR	16,606	TN	15.00	249
		GEOTEXTILE	13,740	SY	6.00	82
		FOUNDATION/LOCK DEWATERING	1	JOB	SUM	3,000
		MARINE FACILITIES, TEMP. MOORING STR.	1	JOB	SUM	3,900
		CONCRETE				
		STRUCTURAL GROUTING	450	CY	200	90
		CAST IN PLACE REINFORCED CONCRETE	56,208	CY	217	12,197
		CAST IN PLACE CONNECTIONS	480	CY	725	348
		PRECAST CONCRETE	2,231	CY	400	892
		TREMIE CONCRETE	23,163	CY	165	3,822
		PRECAST FLOOR PAVERS AND STRUTS	8,111	CY	286	2,320
		SET PRECAST FLOOR BEAMS	16	EA	16000	256
		SET FLOOR PANELS	64	EA	10000	640
		STEEL REINFORCEMENT	5,612,830	LB	0.75	4,210
		METALS				
		SHEET PILING	270,177	SF	35.80	9,672
		SHEET PILE BRACING	1	JOB	SUM	350
		FOUNDATION PILING AND TESTING (HP PILES)	77,763	LF	39.75	3,091
		FOUNDATION PILING AND TESTING (48" PIPE PILES)	28,798	LF	180.00	5,184
		FOUNDATION PILING AND TESTING (PRECAST PILES)	4,346	LF	16.00	70
		STRUCTURAL STEEL (GATES, VALVES, TRASHRACKS, BULKHEADS)	1	JOB	SUM	11,613
		STRUCTURAL STEEL (MISCELLANEOUS - LADDERS, ETC.)	1	JOB	SUM	3,040
		ELECTRICAL				
		ELECTRICAL SYSTEM	1	JOB	SUM	4,700
		INSTRUMENTATION	1	JOB	SUM	1,250
		MECHANICAL				
		GATE AND VALVE OPERATING MACHINERY	1	JOB	SUM	2,750
		MECHANICAL SYSTEMS	1	JOB	SUM	3,200
		MISCELLANEOUS	1	JOB	SUM	1,950
	05 LOCKS SUBTOTAL					96,176
05.60.		GUIDEWALLS				
		SITEWORK				
		EXCAVATION	118,490	CY	4.5	533
		BACKFILL	73,640	CY	10	736
		SCOUR PROTECTION	18,900	TON	15	284
		CONCRETE				
		CAST IN PLACE REINFORCED CONCRETE	1,570	CY	150	236
		PRECAST BEAMS	6,000	LF	2125	12,750
		PRECAST BEAM SEATS	165	CY	1000	165
		GROUT FOR BEAMS	490	CY	1000	490
		METALS				
		STEEL CYLINDER FILLED WITH CONCRETE	16	EA	560000	8,960
		NOSE STEEL CYLINDERS FILLED WITH CONCRETE	2	EA	900000	1,800
		Z-PILING	21,000	SF	21.52	452
		FOUNDATION PILING	72,000	LF	52.50	3,780
		MISC METAL (HAND RAIL, LADDERES, CHECKPOST, ETC.)	1	JOB	SUM	560
	05.60 GUIDEWALLS SUBTOTAL					30,746
09.	CHANNEL WORK		1	JOB	SUM	680
	PROJECT SUBTOTAL					127,902
	CONTINGENCIES 25%					31,975
		PROJECT SUBTOTAL WITH CONTINGENCIES				159,877
30.	PLANNING, ENGINEERING, AND DESIGN (10%)					15,988
31.	CONSTRUCTION MANAGEMENT (10%)					15,988
	PROJECT TOTAL					$ 191,852

TOTAL BASIC LOCK COST (O4., 05., 05.60.) WITH CONTINGENCIES, PED, & CM* **$ 192,000**

*(EXCLUDES REAL ESTATE, RELOCATION, AND CHANNEL WORK WHICH ARE MORE SITE-SPECIFIC.)

LOCK AND DAM NO. 22, LOCATION 2, TYPE R
1200' LOCK ALTERNATIVE (ROCK-FOUNDED)

ACCOUNT CODE	ITEM	QUANTITY	UNIT	UNIT PRICE ($'s)	AMOUNT ($1,000's)
01.	**LANDS AND DAMAGES**				
	REAL ESTATE	1	JOB	SUM	150
04.	**DAMS**				
	04 DAMS SUBTOTAL				0
05.	**LOCKS**				
	SITEWORK				
	MOBILIZATION	1	JOB	SUM	8,000
	DEMOLITION	1	JOB	SUM	500
	ROCK EXCAVATION	8,247	CY	45	371
	OVERBURDEN EXCAVATION	40,900	CY	4.5	184
	BACKFILL	16,700	CY	10	167
	LOCK DEWATERING	1	JOB	SUM	1,250
	MARINE FACILITIES, TEMP MOORING STRUCTURE	1	JOB	SUM	3,900
	CONCRETE				
	UNDERBASE GROUTING	460	CY	200	92
	CAST IN PLACE REINFORCED CONCRETE	15,415	CY	280	4,316
	PRECAST CONCRETE	5,019	CY	400	2,008
	GATE MONOLITH TREMIE CONCRETE	1,650	CY	210	347
	CONCRETE CELL FILL	29,510	CY	200	5,902
	FURNISH AND SET LANDING PADS	16	EA	19000	304
	FLOAT IN AND SET MITER GATE SILL	4	EA	100000	400
	SET PRECAST WALL PANELS	48	EA	8000	384
	SET PRECAST BEAMS	50	EA	3000	150
	ANCHOR FOR LANDWALL	1,875	EA	50	94
	METALS				
	RIVER WALL SHEET PILING (PS-31)	100,200	SF	22.04	2,208
	STAY IN PLACE TEMPLATES	20	EA	50,000	1,000
	STRUCTURAL STEEL (GATES, VALVES, TRASHRACKS)	1	JOB	SUM	3,250
	STRUCTURAL STEEL (MISCELLANEOUS - LADDERS, ETC.)	1	JOB	SUM	3,040
	ROCK BOLTS & SUPPORTS FOR PRECAST BEAMS	140	EA	350	49
	FASTNERS FOR PRECAST PANELS	336	EA	100	34
	HIGH CAPACITY ROCK ANCHORS	53	EA	8700	461
	ELECTRICAL				
	ELECTRICAL SYSTEM	1	JOB	SUM	4,700
	MECHANICAL				
	GATE AND VALVE OPERATING MACHINERY	1	JOB	SUM	2,750
	MECHANICAL SYSTEMS	1	JOB	SUM	3,200
	MISCELLANEOUS	1	JOB	SUM	1,950
	05 LOCKS SUBTOTAL				51,010
05.60.	**GUIDEWALLS**				
	SITEWORK				
	ROCK EXCAVATION	210	CY	45.00	9
	OVERBURDEN EXCAVATION	3060	CY	4.50	14
	CONCRETE				
	CAST IN PLACE REINFORCED CONCRETE	500	CY	280	140
	PRECAST CONCRETE BEAMS (PRESTRESSED)	2,025	LF	2,000	4,050
	TREMIE CONCRETE (WITH REINFORCEMENT)	2,515	CY	210	528
	METALS				
	STEEL CYLINDERS FOR CELLS (FILLED W CONCRETE)	5	EA	450,000	2,250
	NOSE STELL CYLINDER (FILLED WITH CONCRETE)	1	EA	900,000	900
	ANCHOR BARS FOR BEAMS	2,010	LF	87.60	176
	WALL ARMOR (14 STRIPS)	369,600	LB	4.20	1,552
	STEEL RUB PLATE AND ACCESSORIES	63,600	LB	6.00	382
	LADDERS AND MISC METALS	100,000	LB	3.00	300
	HANDRAILLING (ALUM.)	1,400	LF	125.40	176
	CHECKPOST	30	EA	1,546.00	46
	ACCESS HATCH	1	JOB	SUM	33
	ELECTRICAL				
	ELECTRICAL SYSTEM	1	JOB	SUM	78
	05.60 GUIDEWALLS SUBTOTAL				10,634
09.	**CHANNEL WORK**	1	JOB	SUM	3,200
	PROJECT SUBTOTAL				64,995
	CONTINGENCIES 25%				16,249
	PROJECT SUBTOTAL WITH CONTINGENCIES				81,243
30.	**PLANNING, ENGINEERING, AND DESIGN (10%)**				8,124
31.	**CONSTRUCTION MANAGEMENT (10%)**				8,124
	PROJECT TOTAL				$ 97,492

TOTAL BASIC LOCK COST (O4., 05., 05.60.) WITH CONTINGENCIES, PED, & CM* **$ 97,000**

*(EXCLUDES REAL ESTATE, RELOCATION, AND CHANNEL WORK WHICH ARE MORE SITE-SPECIFIC.)

LOCK AND DAM NO. 22, LOCATION 3, TYPE R
1200' LOCK ALTERNATIVE (ROCK-FOUNDED)

ACCOUNT CODE	ITEM	QUANTITY	UNIT	UNIT PRICE ($'s)	AMOUNT ($1,000's)
01.	**LANDS AND DAMAGES**				
	REAL ESTATE	1	JOB	SUM	150
04.	**DAMS**				
	04 DAMS SUBTOTAL				0
05.	**LOCKS**				
	SITEWORK				
	MOBILIZATION	1	JOB	SUM	8,000
	DEMOLITION	1	JOB	SUM	500
	ROCK EXCAVATION	12,001	CY	45	540
	OVERBURDEN EXCAVATION	34,000	CY	4.5	153
	LOCK DEWATERING	1	JOB	SUM	1,250
	MARINE FACILITIES, TEMP MOORING STRUCTURE	1	JOB	SUM	3,900
	CONCRETE				
	UNDERBASE GROUTING	2,200	CY	200	440
	CAST IN PLACE REINFORCED CONCRETE	15,751	CY	260	4,095
	PRECAST CONCRETE	9,130	CY	400	3,652
	CONCRETE CELL FILL	53,570	CY	200	10,714
	FURNISH AND SET LANDING PADS	6	EA	19000	114
	FLOAT IN AND SET MITER GATE SILL	1	EA	140000	140
	SET PRECAST WALL PANELS	60	EA	8000	480
	SET PRECAST BEAMS	150	EA	3000	450
	METALS				
	PLATE STEEL FOR STEEL CANS	184,901	SF	22.04	4,075
	STRUCTURAL STEEL (GATES, VALVES, TRASHRACKS)	1	JOB	SUM	3,250
	STRUCTURAL STEEL (MISCELLANEOUS - LADDERS, ETC.)	1	JOB	SUM	3,040
	ROCK BOLTS & SUPPORTS FOR PRECAST BEAMS	140	EA	350	49
	FASTNERS FOR PRECAST PANELS	336	EA	100	34
	HIGH CAPACITY ROCK ANCHORS	125	EA	8700	1,088
	ELECTRICAL				
	ELECTRICAL SYSTEM	1	JOB	SUM	4,700
	MECHANICAL				
	GATE AND VALVE OPERATING MACHINERY	1	JOB	SUM	2,750
	MECHANICAL SYSTEMS	1	JOB	SUM	3,200
	MISCELLANEOUS	1	JOB	SUM	1,950
	05 LOCKS SUBTOTAL				58,564
05.60.	**GUIDEWALLS**				
	SITEWORK				
	ROCK EXCAVATION	210	CY	45.00	9
	OVERBURDEN EXCAVATION	3,060	CY	4.50	14
	CONCRETE				
	CAST IN PLACE REINFORCED CONCRETE	500	CY	210.00	105
	PRECAST CONRETE BEAMS (PRESTRESSED)	6,000	LF	2,125.00	12,750
	TREMIE CONCRETE (WITH REINFORCMENT)	2,515	CY	45	113
	METALS				
	STEEL CYLINDERS FOR CELLS (FILLED WITH CONCRETE)	14	EA	560000	7,840
	NOSE STEEL CYLINDER (FILLED WITH CONCRETE)	2	EA	900,000.00	1,800
	ANCHOR BARS FOR BEAMS (1" DIA)	2,010	LF	87.60	176
	MISC METAL (HAND RAIL, LADDERES, CHECKPOST, ETC.)	1	JOB	SUM	560
	05.60 GUIDEWALLS SUBTOTAL				23,367
09.	**CHANNEL WORK**	1	JOB	SUM	3,200
	PROJECT SUBTOTAL				85,281
	CONTINGENCIES 25%				21,320
	PROJECT SUBTOTAL WITH CONTINGENCIES				106,601
30.	**PLANNING, ENGINEERING, AND DESIGN (10%)**				10,660
31.	**CONSTRUCTION MANAGEMENT (10%)**				10,660
	PROJECT TOTAL				$ 127,922

TOTAL BASIC LOCK COST (O4., 05., 05.60.) WITH CONTINGENCIES, PED, & CM* **$ 128,000**

*(EXCLUDES REAL ESTATE, RELOCATION, AND CHANNEL WORK WHICH ARE MORE SITE-SPECIFIC.)

Attachment C: Construction Schedules

Tue 9/28/99

Upper Mississippi River - Illinois Waterway System Navigation Study
Construction Schedule for Impacts to Navigation; Location 2, Pile Founded Locks
Low First Cost Lock

Code: P2D, P50, Weather Delays

ID	Task Name
1	Site Preparation - Channel
2	Temp. Mooring Facilities
3	Construct DS GWall
4	Cells 1
5	Cells 2
6	End Cell
7	Shafts 1
8	Shafts 2
9	Pile Caps 1
10	Pile Caps 2
11	Beams, Connections, dtls 1
12	Beams, Connections, dtls 2
13	**Miter Gate Monolith**
14	Demo End of D.S. GWall
15	Z-pile cradle for Gate Monolith
16	Excavate for Gate Monolith
17	Stone Protection Gate Mono
18	Gate Monolith Piles and Pads
19	Spud Barges to Divert Flow
20	Gate Mono setdown, grout, wall cap units
21	Gate mono shafts (two crews)
22	Concreting high cap piles
23	Gate Mono Concreting
24	**Bull Nose Cell Installation**
25	**I-Wall Construction**
26	I-wall Drive & grout 1(2 crews)
27	Plug Outboard discharge Ports
28	I-wall Drive & grout 2 (2 crews)
29	I-Wall Arcs & grout (2 crews)
30	I-wall Cast in Place Cap
31	I-wall tie in
32	I-wall precast wall facing
33	**Landwall Construction**
34	Excavate For Landwall
35	Landwall cells & arcs1 (2 crews)
36	Landwall cells & arcs2 (2 crews)
37	Landwall HP12x53
38	Concrete plug cell to Gwall
39	Concrete fill cell to Gwall
40	Landwall Tie-in Connection
41	Cap Landwall Cell
42	Add ladders and pins to Gwall
43	Dewater Lock
44	Cap Existing Gwall
45	**Floor Unit Installation**
46	Excavation
47	Place and grade filter stone
48	CIP or Precast floor paving
49	**Remove lower Miter gate sill**
50	Secure Existing Lower Gate in Recesses
51	**Mech/Elec**
52	**Permanent. Scour Protection**

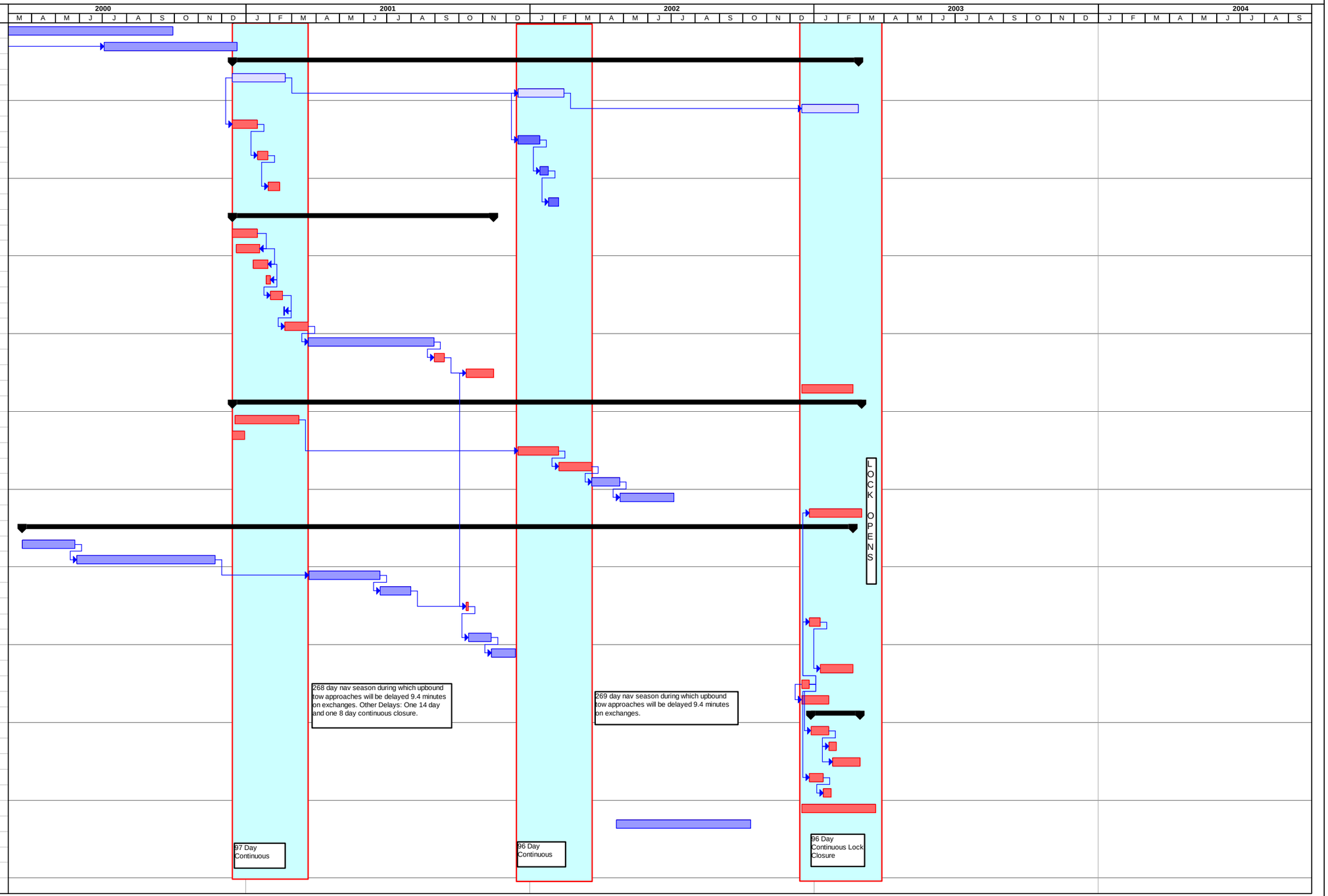

Project:
Date: Tue 9/28/99

No Nav Impacts | Closure Required | Summary | Nav Impacts | External Tasks | Project Summary | Split | Rolled Up Split

Thu 6/15/00

Upper Mississippi River - Illinois Waterway System Navigation Study
Construction Schedule for Impacts to Navigation; Location 3, Type R, Pile Founded Locks
P50 Durations for All Tasks

Code: P3R, P50, Weather Delays

ID	Task Name
1	Site Preparation Lock
2	Fill Scour Hole, Stone Protection
3	Site Preparation - Channel #1
4	Site Preparation - Channel #2
5	Temp. Mooring Facilities
6	**Construct Riverwall**
7	Drive Riverward Z-Pile
8	48" Pipe Pile for Riverward Wall
9	Drive Landward Z-Pile
10	Stone in Z-pile Cofferdam
11	Rebar Cage and Tremie
12	Braced Cofferdam
13	Complete Riverwall
14	Remove Timber Crib, I-Wall
15	Partially Demo Apron Slab
16	Z-Pile Shoring for Exist. I-wall
17	Bull Nose Cell Installation
18	**Gate Mono. Construction**
19	First 50% of Z-Piles
20	Stone in Cofferdam
21	48" Pipe Piles
22	Rebar
23	Secon 50% of Z- Piles
24	Install dewatering system
25	Tremie, 7 day closure
26	Dewater cofferdam, prep concrete
27	place conc and rebar
28	Complete monolith concrete
29	Complete emb metals
30	Install mach & gates
31	Demolish Upstream Guardwall
32	Install US Delong Pier wall
33	**Construct US Guard Wall**
34	general excavation
35	install 8-35 ft cans w/10 piles
36	fill cells with concrete
37	Install one-57 ft dia cell
38	Beams (14), Conectns, dtls
39	Beams (2), Conectns, dtls
40	Scour Prot small cans
41	Scour Prot large cell
42	**Construct DS Guide Wall**

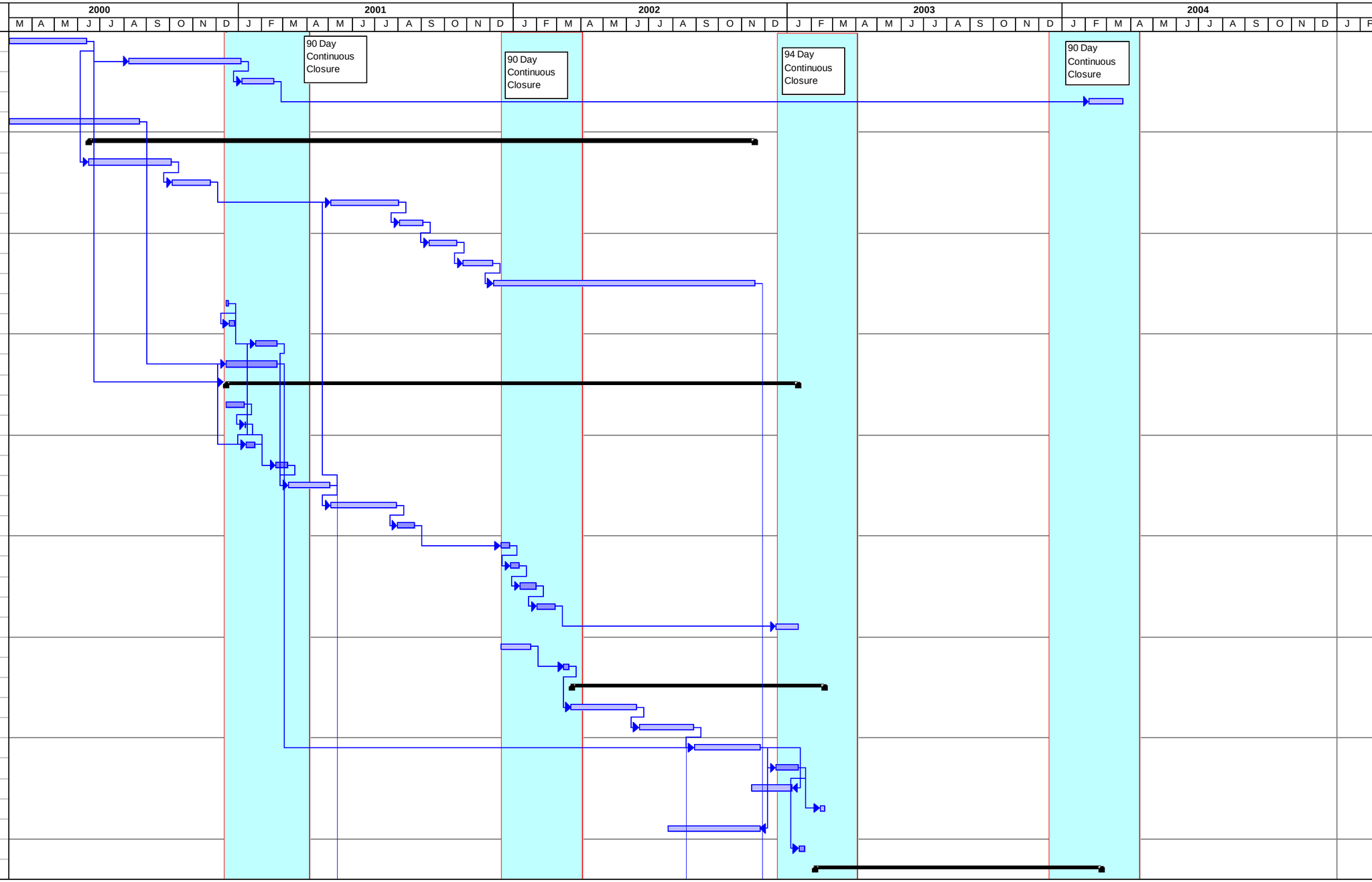

Project: WEATHR50_type R by MVP.
Date: Thu 6/15/00

No Nav Impacts		Summary		External Tasks		Split	
Closure Required		Nav Impacts		Project Summary		Rolled Up Split	

Thu 6/15/00

Upper Mississippi River - Illinois Waterway System Navigation Study
Construction Schedule for Impacts to Navigation; Location 3, Type R, Pile Founded Locks
P50 Durations for All Tasks

Code: P3R, P50, Weather Delays

ID	Task Name
43	general excavation
44	install one 57' cell w/16 piles
45	install 5-35 ft cans w/10 piles
46	fill cells with concrete
47	Beams, Connections, dtls
48	z-pile port blocks
49	Gwall Scour Protection
50	**Construct I-Wall**
51	Z-Pile Cofferdam
52	Stone Prot. in Coffrdam
53	Drive pipe Piles
54	Rebar and Tremie Seal
55	Brace Cofferdam
56	Complete I- Wall
57	Tie-In River Wall
58	Tie-In and strengthen I-Wall
59	Tie-In I-Wall -Closure reqd
60	Excavate for Chamber Floor
61	Flr Brns, piles, fascine mattres
62	Flr Filter, Paving Slabs
63	**Dewater both Locks**
64	Connect Brns at Lockwalls
65	Plug Exist. I-Wall Ports
66	Permanent. Scour Protection

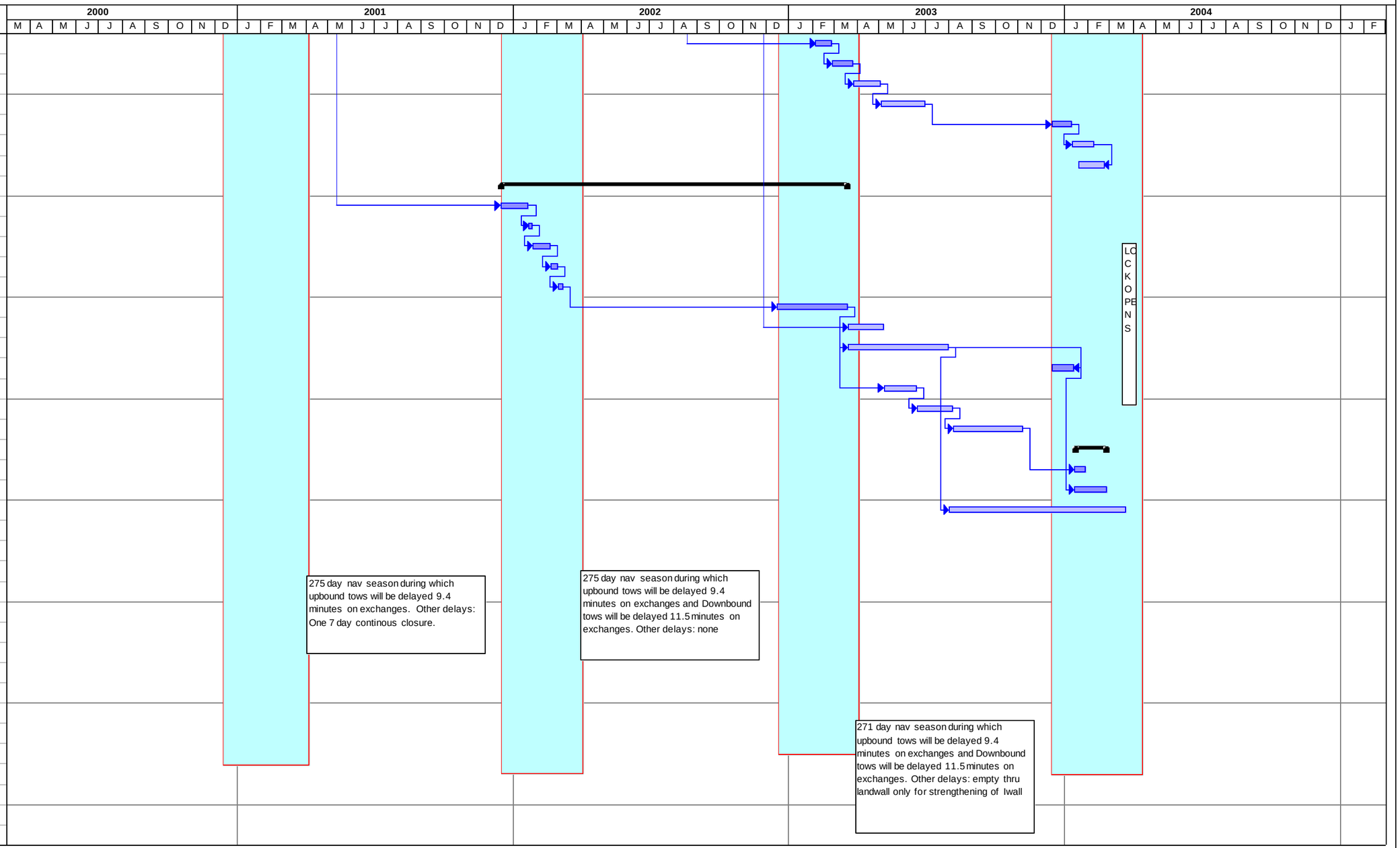

Project: WEATHR50_type R by MVP.
Date: Thu 6/15/00

No Nav Impacts		Summary		External Tasks		Split	
Closure Required		Nav Impacts		Project Summary		Rolled Up Split	

Tue 9/28/99

Upper Mississippi River - Illinois Waterway System Navigation Study
Construction Schedule for Impacts to Navigation; Location 2, Rock Founded Locks
Low First Cost Lock

Code: R2D, P50, Weather Delays

ID	Task Name	Duration	Start
1	Site Preparation - Channel	1200 hrs	Wed 3/1/00
2	Temp. Mooring Facilities	1000 hrs	Mon 7/3/00
3	**Construct DS GWall**	**##########**	**Fri 12/15/00**
4	Rock Excavation	50 hrs	Fri 12/15/00
5	Steel Cans	500 hrs	Tue 12/19/00
6	End Cell	800 hrs	Mon 12/16/02
7	Beams, Connections, dtls 1	400 hrs	Sat 2/3/01
8	**Miter Gate Monolith**	**197.3 days**	**Fri 12/15/00**
9	Demo End of D.S. GWall	400 hrs	Fri 12/15/00
10	Excavate rock for Gate Monoliths (one crew)	500 hrs	Thu 12/21/00
11	Gate Monolith Pads Landside	200 hrs	Mon 1/15/01
12	Gate Monolith Pads Riverside/excavate	300 hrs	Mon 12/17/01
13	Spud Barges to Divert Flow	24 hrs	Sat 1/27/01
14	Spud Barges to Divert Flow	24 hrs	Tue 1/8/02
15	Gate Monos land setdown, grout, wall cap units	170 hrs	Mon 1/29/01
16	Gate Monos river setdown, grout, wall cap units	170 hrs	Wed 1/9/02
17	Gate Mono Concreting Landside	8 days	Mon 2/12/01
18	Gate Mono Concreting Riverside	8 days	Fri 1/18/02
19	Downstream Bulkhead sill in the wet	10 days	Mon 1/28/02
20	**Bull Nose Cell Installation**	800 hrs	Mon 12/16/02
21	**I-Wall Construction**	**##########**	**Fri 12/15/00**
22	Rock Excavation	340 hrs	Mon 12/18/00
23	I-wall Drive & Tremie 1(2 crews)	1080 hrs	Tue 12/26/00
24	Plug Outboard discharge Ports	10 days	Fri 12/15/00
25	I-wall Drive & tremie 2 (2 crews)	900 hrs	Mon 12/17/01
26	I-Wall Arcs & Tremie (2 crews)	490 hrs	Thu 2/14/02
27	I-wall Cast in Place Cap	200 hrs	Tue 3/19/02
28	I-wall tie in	400 hrs	Tue 4/23/02
29	I-wall precast wall facing	900 hrs	Wed 12/18/02
30	**Landwall Construction**	**##########**	**Mon 3/20/00**
31	Excavate Soil For Landwall	950 hrs	Mon 3/20/00
32	Excavate Rock For Landwall	125 hrs	Mon 9/4/00
33	Landwall forms, rebar, concrete1 (2 crews)	600 hrs	Wed 9/27/00
34	Landwall forms, rebar, concrete 2 (2 crews)	600 hrs	Fri 3/23/01
35	Landwall Tie-in Connection	200 hrs	Fri 7/6/01
36	Backfill landwall	420 hrs	Fri 8/10/01
37	Add ladders and pins to Gwall	600 hrs	Wed 12/18/02
38	Dewater Lock	2 days	Mon 12/16/02
39	**Remove lower Miter gate sill**	200 hrs	Wed 12/18/02
40	Secure Existing Lower Gate in Recesses	160 hrs	Mon 1/6/03
41	Excavate rock in chamber floor	610 hrs	Wed 12/18/02
42	New sills: miter gate, US bulkhead	400 hrs	Wed 12/18/02
43	**Mech/Elec**	1300 hrs	Mon 12/16/02
44	**Permanent. Scour Protection**	200 hrs	Mon 4/22/02

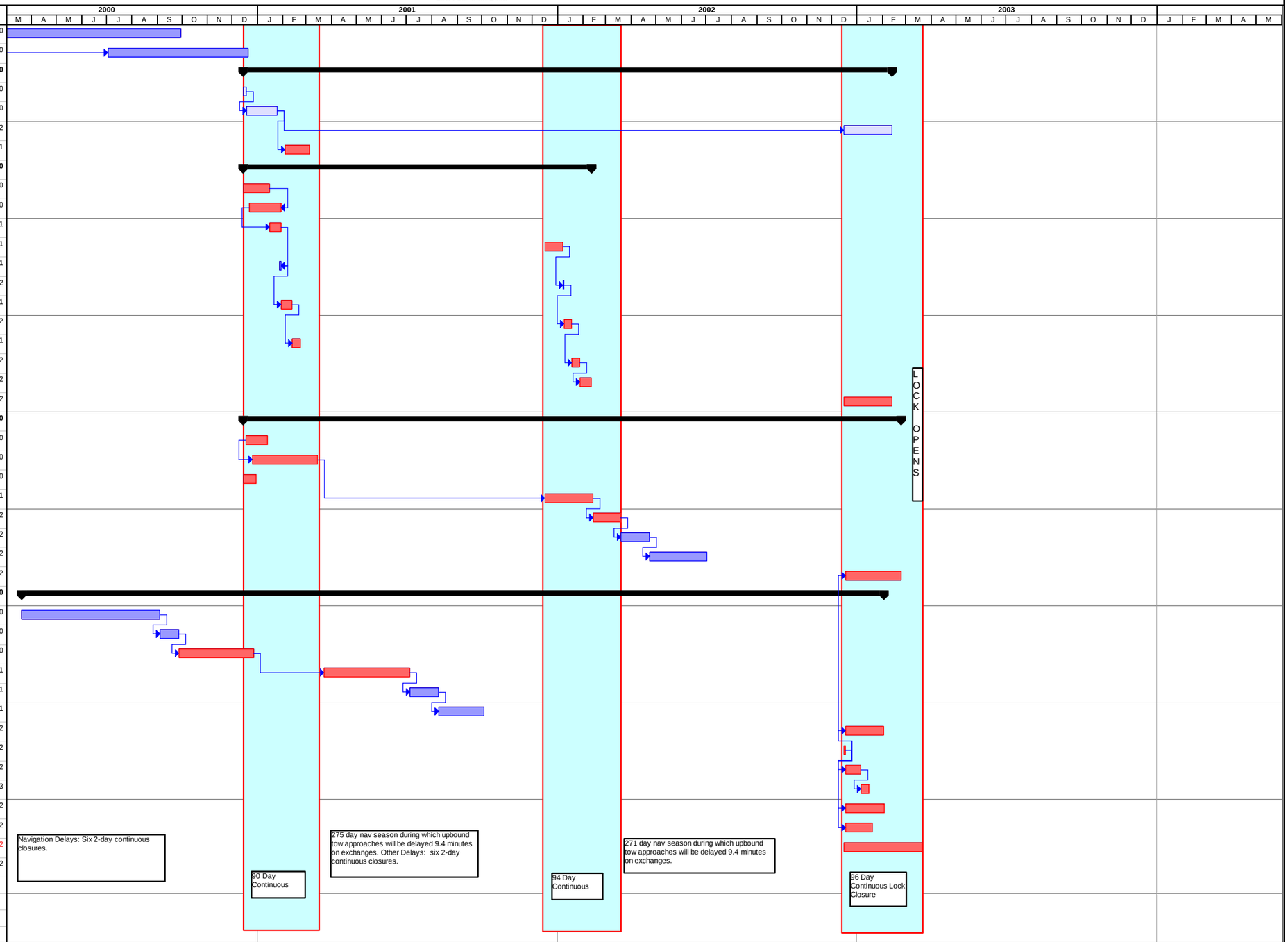

Project:
Date: Tue 9/28/99

No Nav Impacts | Closure Required | Summary | Nav Impacts | External Tasks | Project Summary | Split | Rolled Up Split

Date: Tue 9/28/99

Upper Mississippi River - Illinois Waterway System Navigation Study
Construction Schedule for Impacts to Navigation; Location 3, Type R, Rock Founded Locks
P50 Durations for All Tasks

Code: R3R,P50, Weather Delay

ID	Task Name	Duration	Text1	Start	Finish
1	Site Preparation - Channel	600 hrs	assumed	Mon 4/3/00	Mon 7/17/00
2	Temp. Mooring Facilities	1000 hrs	assumed	Mon 5/29/00	Wed 11/22/00
3	**Construct Riverwall**	347.55 days		**Wed 3/1/00**	**Thu 12/26/02**
4	Soil Excavation	42 days	25000cy	Wed 3/1/00	Wed 7/26/00
5	Rock Excavation	60 days	3560cy	Wed 4/5/00	Fri 11/3/00
6	Riverwall Cans Phase 1	40 days	16ea	Thu 7/20/00	Mon 12/11/00
7	Riverwall Cans Phase 2	30 days	12ea	Thu 3/15/01	Wed 6/27/01
8	Riverwall Arcs Phase 1	48 days	19ea	Thu 6/28/01	Wed 12/12/01
9	Riverwall Arcs Phase 2	25 days	10ea	Thu 2/7/02	Tue 5/14/02
10	Tie-In River Wall	400 hrs		Tue 5/14/02	Tue 7/23/02
11	Post Tension wall	85 days	85anchors	Mon 3/18/02	Thu 12/26/02
12	**Construct Gate Monoliths**	**104.26 days**		**Fri 12/15/00**	**Wed 8/29/01**
13	I-Wall Soil Excavation	33 hrs	2000cy	Fri 12/15/00	Mon 12/18/00
14	I-Wall Rock Excavation	66 hrs	400cy	Mon 12/18/00	Thu 12/21/00
15	Landing Pads	120 hrs	4ea	Thu 12/21/00	Tue 1/2/01
16	Float in lower unit, underbase grt,conc fill	15 days	1ea	Thu 1/11/01	Thu 2/1/01
17	Lift in Upper units, fill with concrete	440 hrs	5 ea	Thu 2/1/01	Wed 3/7/01
18	River Wall Soil Excavation	33 hrs	2000cy	Thu 3/15/01	Wed 3/21/01
19	Riverwall Rock Exc	66 hrs	400cy	Wed 3/21/01	Mon 4/2/01
20	Landing Pads	120 hrs	4ea	Mon 4/2/01	Mon 4/23/01
21	Float in lower unit, underbase grt,conc fill	15 days	1ea	Mon 4/23/01	Wed 6/13/01
22	Lift in Upper units, fill with concrete	440 hrs	5 ea	Wed 6/13/01	Wed 8/29/01
23	**Construct US Guard Wall**	137.7 days		**Fri 12/15/00**	**Tue 12/18/01**
24	Soil Excavation	32 hrs	1900cy	Fri 12/15/00	Mon 12/18/00
25	Rock Excavation	22 hrs	130cy	Mon 12/18/00	Tue 12/19/00
26	35 ft diameterCells/cans	19 days	9ea	Tue 2/27/01	Tue 5/1/01
27	57 ft diameterCells/cans	18 days	1ea	Tue 12/19/00	Tue 1/16/01
28	Beams, Connections, dtls	39 days	18 beams	Thu 8/9/01	Tue 12/18/01
29	**Construct DS Guide Wall**	95 days		**Wed 12/20/00**	**Thu 8/9/01**
30	Soil Excavation	20 hrs	1160cy	Wed 12/20/00	Thu 12/21/00
31	Rock Excavation	15 hrs	80cy	Thu 12/21/00	Sat 12/23/00
32	35 ft diameterCells/cans	9 days	4ea	Mon 2/12/01	Sat 2/24/01
33	57 ft diameterCells/cans	18 days	1ea	Wed 1/17/01	Mon 2/12/01
34	Beams, Connections, dtls	30 days	20beams	Thu 4/26/01	Thu 8/9/01
35	**Constr I-Wall**	319.35 days		**Fri 12/15/00**	**Wed 3/12/03**
36	Soil Excavation	84 hrs	5000cy	Fri 12/15/00	Wed 12/20/00
37	Rock Excavation	297 hrs	1780cy	Fri 12/15/00	Mon 1/8/01
38	Construct cans	35 days	14cans	Mon 1/8/01	Mon 2/26/01
39	Construct arcs	38 days	15arcs	Sat 12/15/01	Thu 2/7/02
40	Demo and Tie-In with I-Wall	300 hrs		Mon 12/16/02	Wed 1/8/03
41	Post Tension I-wall	40 days	40anchors	Wed 8/22/01	Mon 12/24/01
42	Iwall landside rubsurface	60 days		Mon 12/16/02	Wed 3/12/03
43	Filling Intake structure	180 days		Mon 6/4/01	Sun 12/15/02
44	**Dewater New Lock (20 hour days)**	108.85 days		**Tue 1/7/03**	**Wed 6/11/03**
45	Cofferdam and Dewater New Lock	600 hrs	3cells	Tue 1/7/03	Tue 2/18/03
46	Lockwall rubsurface bms and panels	1800 hrs		Wed 1/8/03	Thu 5/15/03
47	Excav. Rock in Chamber	977 hrs	5860cy	Tue 2/18/03	Mon 4/28/03
48	Construct culvert	600 hrs	3713cy	Mon 4/7/03	Tue 5/20/03
49	Lower Miter Gate and 2 BH Sills	540 hrs	520 cy	Thu 2/27/03	Tue 4/8/03
50	Install Miter Gates	10 days	2ea	Tue 4/8/03	Tue 4/22/03
51	Constr Upper Bulkhd Slots	540 hrs		Tue 4/8/03	Sat 5/17/03
52	Remove Cofferdam	15 days		Tue 5/20/03	Wed 6/11/03
53	Equipment, cabling, controls,signs,etc	120 days		Wed 12/18/02	Wed 6/11/03

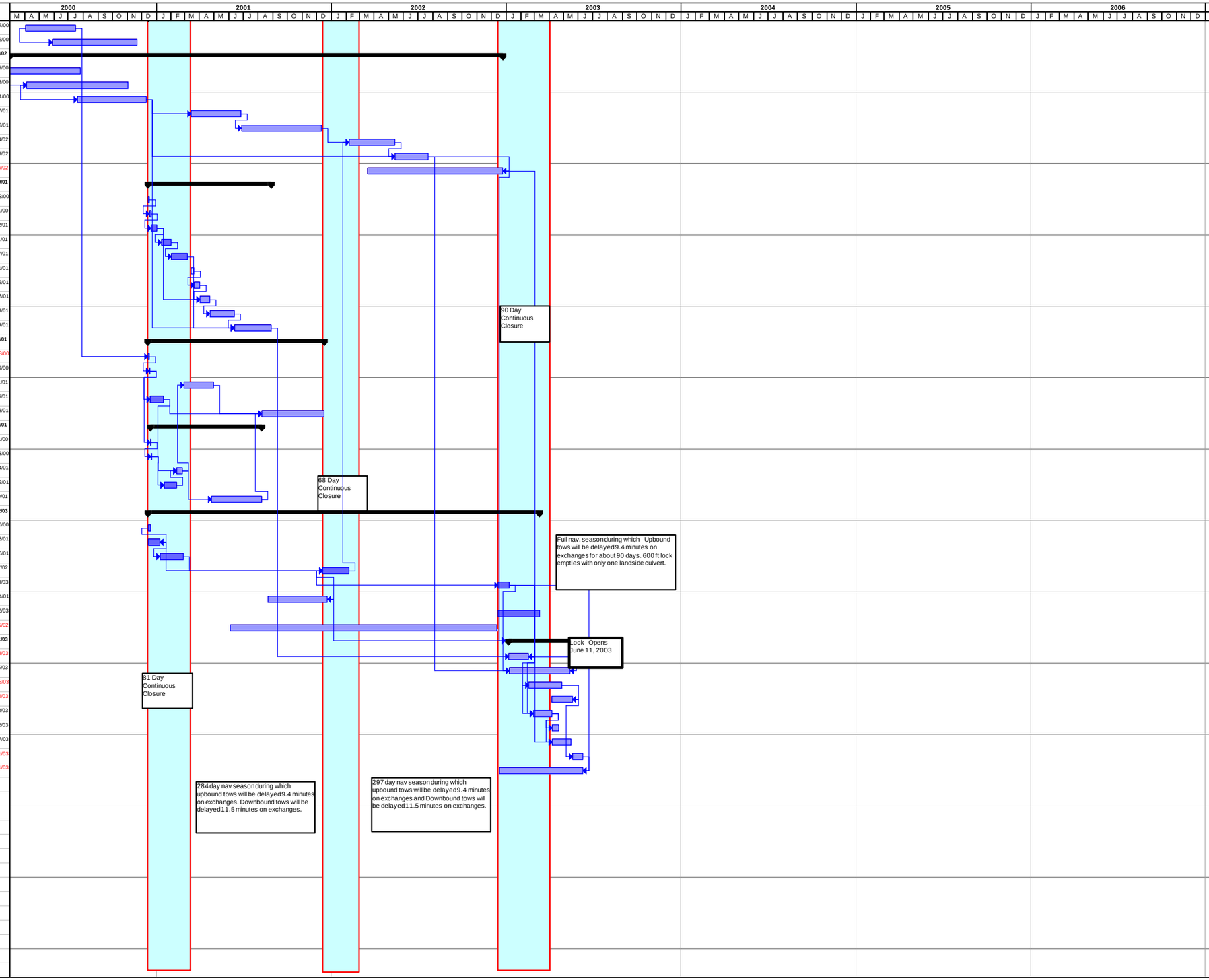

Project: WethrR50.mpp
Date: Tue 9/28/99

No Nav Impacts | Closure Required | Summary | Nav Impacts | External Tasks | Project Summary | Split | Rolled Up Split