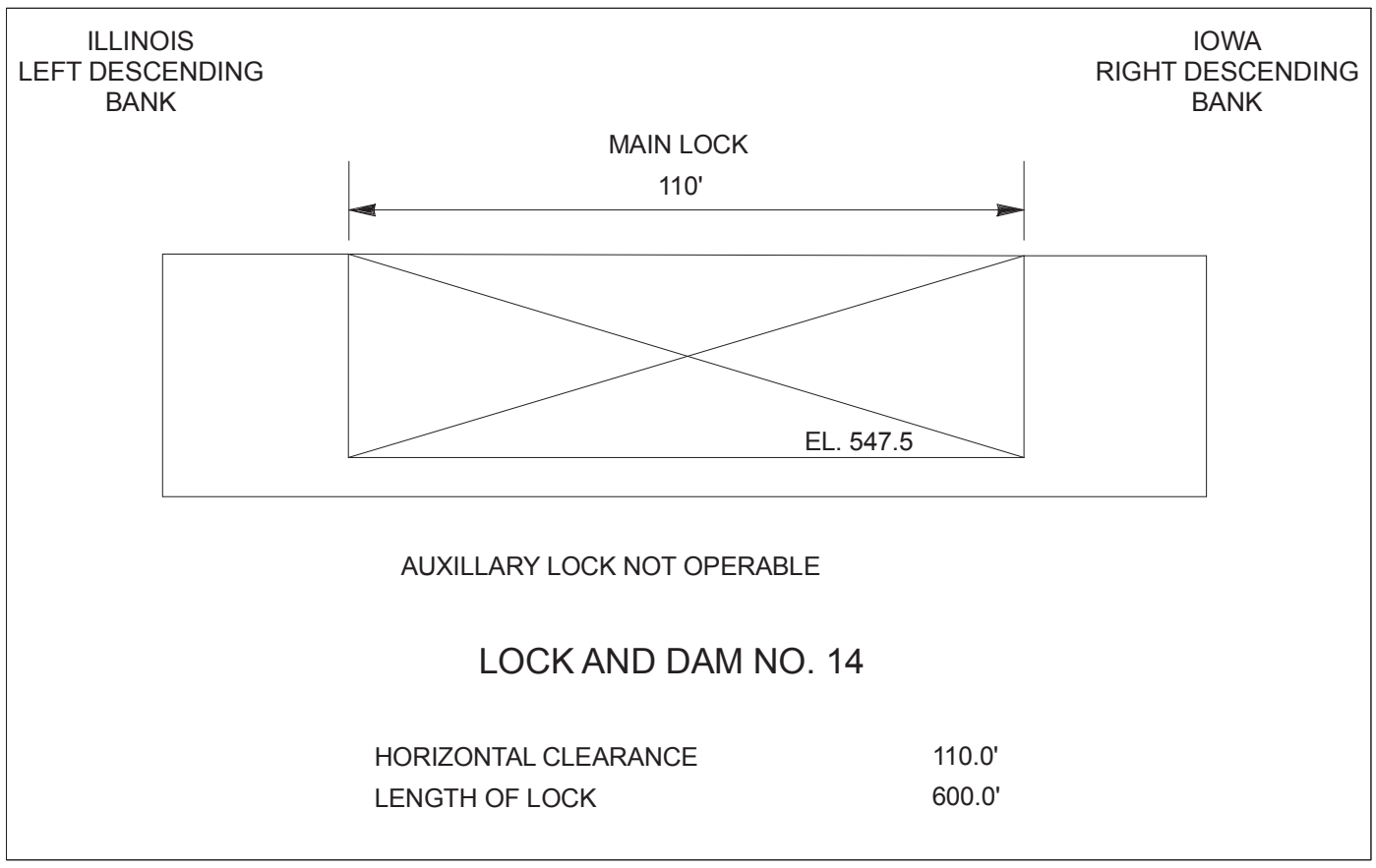

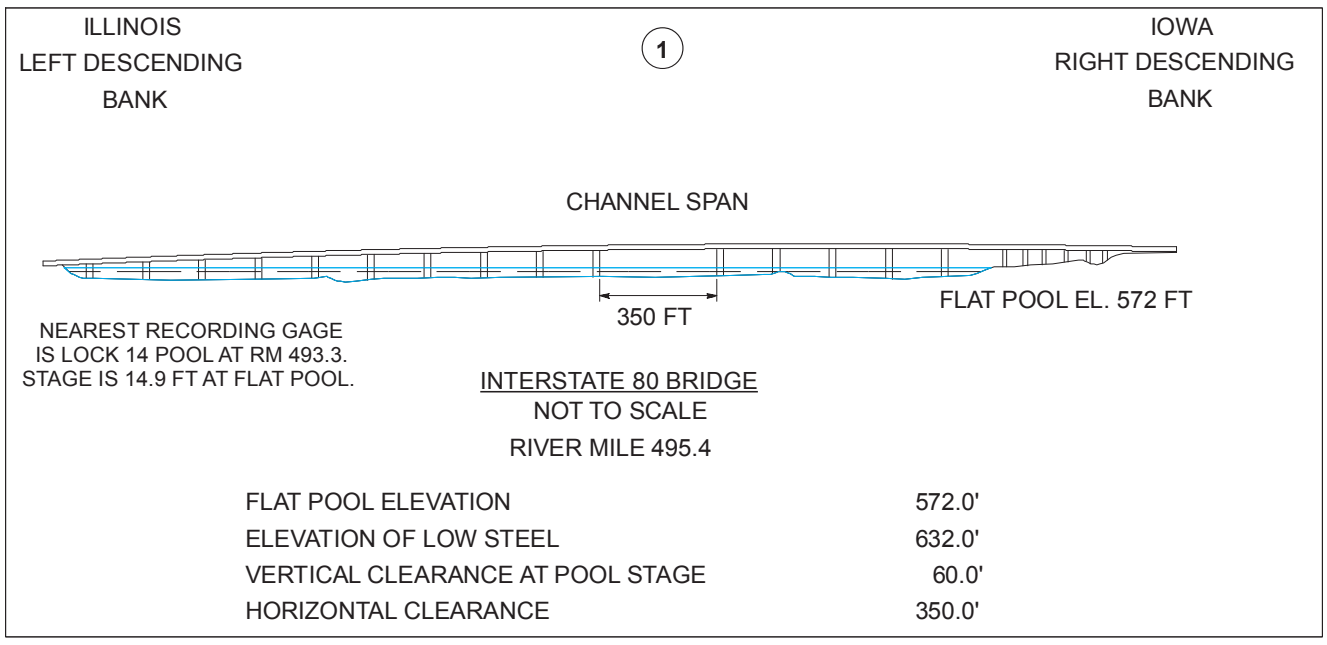

FACILITIES	
1	*Riverstone Group, Leclaire Quarry, Barge Dock.*